



aerospace
climate control
electromechanical
filtration
fluid & gas handling
hydraulics
pneumatics
process control
sealing & shielding





Chelsea® Power Take-Off

Applications Catalog



Parker Chelsea

ENGINEERING YOUR SUCCESS.

⚠ WARNING

FAILURE OR IMPROPER SELECTION OR IMPROPER USE OF THE PRODUCTS AND/OR SYSTEMS DESCRIBED HEREIN OR RELATED ITEMS CAN CAUSE DEATH, PERSONAL INJURY AND PROPERTY DAMAGE.

This document and other information from Parker Hannifin Corporation, its subsidiaries and authorized distributors provide product and/or system options for further investigation by users having technical expertise. It is important that you analyze all aspects of your application and review the information concerning the product or system in the current product catalog. Due to the variety of operating conditions and applications for these products or systems, the user, through its own analysis and testing, is solely responsible for making the final selection of the products and systems and assuring that all performance, safety and warning requirements of the application are met.

The products described herein, including without limitation, product features, specifications, designs, availability and pricing, are subject to change by Parker Hannifin Corporation and its subsidiaries at any time without notice.

Offer of Sale

The items described in this document are hereby offered for sale by Parker Hannifin Corporation, its subsidiaries or its authorized distributors. This offer and its acceptance are governed by the provisions stated in the "Offer of Sale".

© Copyright 2008, Parker Hannifin Corporation, All Rights Reserved

Parker Hannifin Corporation
Chelsea Products Division
Olive Branch, MS 38654 USA

General Safety Information ..... Pages 1.1 thru 1.12

General Safety Information Statements ..... 1.1 thru 1.4
How to use the Catalog ..... 1.5 thru 1.8
Power Take-Off Work Sheet 1.9
Transmission Opening Chart 1.10
Input Gear Designator 1.11

Section 1

Technical Information ..... Pages 2.1 thru 2.88

Mechanical Six Bolt P.T.O.s ..... 2.1 thru 2.17
Mechanical Eight Bolt P.T.O.s ..... 2.18 thru 2.31
Powershift Six & Eight Bolt P.T.O.s ..... 2.32 thru 2.38
Powershift Ten Bolt P.T.O.s ..... 2.39 thru 2.61
Ford P.T.O.s 2.62
Rear Mount P.T.O.s ..... 2.63 thru 2.68
Dual Output P.T.O.s 2.69
Reversible P.T.O.s 2.69
Asia Pacific Transmission P.T.O.s ..... 2.70 thru 2.71
Split Shaft P.T.O.s 2.72
Adapters ..... 2.73 thru 2.82
Kits ..... 2.83 thru 2.85
P.T.O. Shift Options 2.86
Dump Pump General Specifications 2.87

Section 2

Assembly Options ..... Pages 3.1 thru 3.42

This section can be used for quick reference to P.T.O. options or ordering units.

Section 3

Applications ..... Pages 4.1.1 thru 4.22.15

This section contains the latest Transmission/P.T.O. application information by Transmission Manufacturer.

Section 4

Offer of Sale ..... Page 5.1

Section 5

Parker Hannifin Corporation
Chelsea Products Division
Olive Branch, MS 38654 USA

Parker Hannifin Corporation
Chelsea Products Division
Olive Branch, MS 38654 USA

General Safety Information



Parker Hannifin Corporation
Chelsea Products Division
Olive Branch, MS 38654 USA

General Safety Information

General Safety Information Statements .....1.1 thru 1.4
How to use the Catalog .....1.5 thru 1.8
Power Take-Off Work Sheet.....1.9
Transmission Opening Chart 1.10
Input Gear Designator 1.11

Parker Hannifin Corporation
Chelsea Products Division
Olive Branch, MS 38654 USA

Parker Hannifin Corporation
Chelsea Products Division
Olive Branch, MS 38654 USA

The following instructions are for your safety and the safety of the end user. Read them carefully and make sure you understand them thoroughly.

To Prevent Injury to Yourself and/or Damage to the Equipment:

- Read carefully all owner's manuals, service manuals, and/or other instructions.
- Always follow proper procedures, and use proper tools and safety equipment.
- Be sure to receive proper training.
- Never work alone while under a vehicle or while repairing or maintaining equipment.
- Always use proper components in applications for which they are approved.
- Be sure to assemble components properly.
- Never use worn-out or damaged components.
- Always block any raised or moving device that may injure a person working on or under a vehicle.
- Never operate the controls of the Power Take-Off (P.T.O.) or other driven equipment from any position that could result in getting caught in the moving machinery.

Proper Matching of P.T.O.

WARNING: A Power Take-Off must be properly matched to the vehicle transmission and to the auxiliary equipment being powered. An improperly matched Power Take-Off could cause severe damage to the vehicle transmission, the auxiliary driveshaft, and/or the auxiliary equipment being powered. Damaged components or equipment could malfunction causing serious personal injury to the vehicle operator or to others nearby.

To avoid personal injury and/or equipment damage:

- Always refer to Chelsea catalogs, literature, and owner's manuals and follow Chelsea recommendations when selecting, installing, repairing, or operating a Power Take-Off.
- Never attempt to use a Power Take-Off not specifically recommended by Chelsea for the vehicle transmission.
- Always match the Power Take-Off's specified output capabilities to the requirements of the equipment to be powered.
- Never use a Power Take-Off whose range of speed could exceed the maximum safe speed of the equipment to be powered.

Cold Weather Operation of Powershift P.T.O.s

WARNING: During extreme cold weather operation [32°F (0°C) and lower], a disengaged Powershift Power Take-Off can momentarily transmit high torque that will cause unexpected output shaft rotation. This is caused by the high viscosity of the transmission oil when it is extremely cold. As slippage occurs between the Power Take-Off clutch plates, the oil will rapidly heat up and the viscous drag will quickly decrease.

The Power Take-Off output shaft rotation could cause unexpected movement of the driven equipment resulting in serious personal injury, death, or equipment damage.

To avoid personal injury and/or equipment damage:

- Driven equipment must have separate controls.
- The driven equipment must be left in the disengaged position when not in operation.
- Do not operate the driven equipment until the vehicle is allowed to warm up.

This symbol warns of possible personal injury.

Parker Hannifin Corporation
Chelsea Products Division
Olive Branch, MS 38654 USA

Rotating Auxiliary Driveshafts

WARNING: Rotating auxiliary driveshafts are dangerous. You can snag clothes, skin, hair, hands, etc. This can cause serious injury or death.

- Do not go under the vehicle when the engine is running.
- Do not work on or near an exposed shaft when the engine is running.
- Shut off the engine before working on the Power Take-Off or driven equipment.
- Exposed rotating driveshafts must be guarded.

Guarding Auxiliary Driveshafts

WARNING: We strongly recommend that a Power Take-Off and a directly mounted pump be used to eliminate the auxiliary driveshaft whenever possible. If an auxiliary driveshaft is used and remains exposed after installation, it is the responsibility of the vehicle designer and P.T.O. installer to install a guard.

Using Set Screws

WARNING: Auxiliary driveshafts may be installed with either recessed or protruding set screws. If you choose a square head set screw, you should be aware that it will protrude above the hub of the yoke and may be a point where clothes, skin, hair, hands, etc. could be snagged. A socket head set screw, which may not protrude above the hub of the yoke, does not permit the same amount of torquing as does a square head set screw. Also a square head set screw, if used with a lock wire, will prevent loosening of the screw caused by vibration. Regardless of the choice made with respect to a set screw, an exposed rotating auxiliary driveshaft must be guarded.

Important: Safety Information and Owner's Manual

Chelsea Power Take-Offs are packaged with safety information decals, instructions, and an owner's manual. These items are located in the envelope with the P.T.O. mounting gaskets. Also, safety information and installation instructions are packaged with some individual parts and kits. Be sure to read the owner's manual and safety information before installing or operating the P.T.O. Always install the safety information decals according to the instructions provided. Place the owner's manual in the vehicle glove compartment.

Operating the P.T.O. with the Vehicle in Motion

WARNING: Some Power Take-Offs may be operated when the vehicle is in motion. To do so, the P.T.O. must have been properly selected to operate at highway speeds and correctly matched to the vehicle transmission and the requirements of the driven equipment.

If in doubt about the P.T.O.s specifications and capabilities, avoid operating the P.T.O when the vehicle is in motion. Improper application and/or operation can cause serious personal injury or premature failure of the vehicle, the driven equipment, and/or the P.T.O.

Always remember to disengage the P.T.O. when the driven equipment is not in operation.

This symbol warns of possible personal injury.

Parker Hannifin Corporation
Chelsea Products Division
Olive Branch, MS 38654 USA

Pump Installation Precautions

Use a bracket to support the pump to the transmission if:

- The pump weighs **40 pounds** or more.
- The combined length of the P.T.O. and pump is **18 inches** or more from the P.T.O. centerline to the end of the pump.

Also remember to pack the female pilot of the P.T.O. pump shaft with grease before installing the pump on the P.T.O. See page 1.4.

Power Take-Off Maintenance

Due to the normal and sometime severe torsional vibrations that Power Take-Off units experience, operators should follow a set maintenance schedule for inspections. Failure to service loose bolts or Power Take-Off leaks could result in potential auxiliary Power Take-Off or transmission damage.

Periodic P.T.O. MAINTENANCE is required by the owner/operator to ensure proper, safe and trouble free operation.

Daily: Check all air, hydraulic and working mechanisms before operating P.T.O. Perform maintenance as required.

Monthly: Inspect for possible leaks and tighten all air, hydraulic and mounting hardware, if necessary. Torque all bolts, nuts, etc. to Chelsea specifications. Insure that splines are properly lubricated, if applicable. Perform maintenance as required.

With regards to the direct mounted pump splines, the P.T.O. requires the application of a specially formulated anti-fretting, high pressure, high temperature grease. The addition of the grease has been proven to reduce the effects of the torsional vibrations, which result in fretting corrosion on the P.T.O. internal splines as well as the pump external splines. Fretting corrosion appears as a “rusting and wearing” of the pump shaft splines. Severe duty applications, which require long P.T.O. running times and high torque may require more frequent regreasing. Applications such as Utility Trucks that run continuously and are lightly loaded also require frequent regreasing due to the sheer hours of running time. It is important to note that service intervals will vary for each and every application and is the responsibility of the end user of the product. Chelsea also recommends that you consult your pump owner’s manuals and technical services for their maintenance guidelines. Fretting corrosion is caused by many factors and without proper maintenance the anti-fretting grease can only reduce its effectiveness on components.

Chelsea offers the grease to our customers in two packages. The first is a 5/8 fluid ounce tube (379688), which is included with every applicable P.T.O., and the second is a 14-ounce grease cartridge (379831). Chelsea also offers greaseable shafts for most all output designators.

Warranty: Failure to comply entirely with the provisions set forth in the appropriate Owner’s Manual will result in voiding of ALL Warranty consideration.

This symbol warns of possible personal injury.

Parker Hannifin Corporation
Chelsea Products Division
Olive Branch, MS 38654 USA

Direct Mount Pump Support Recommendations

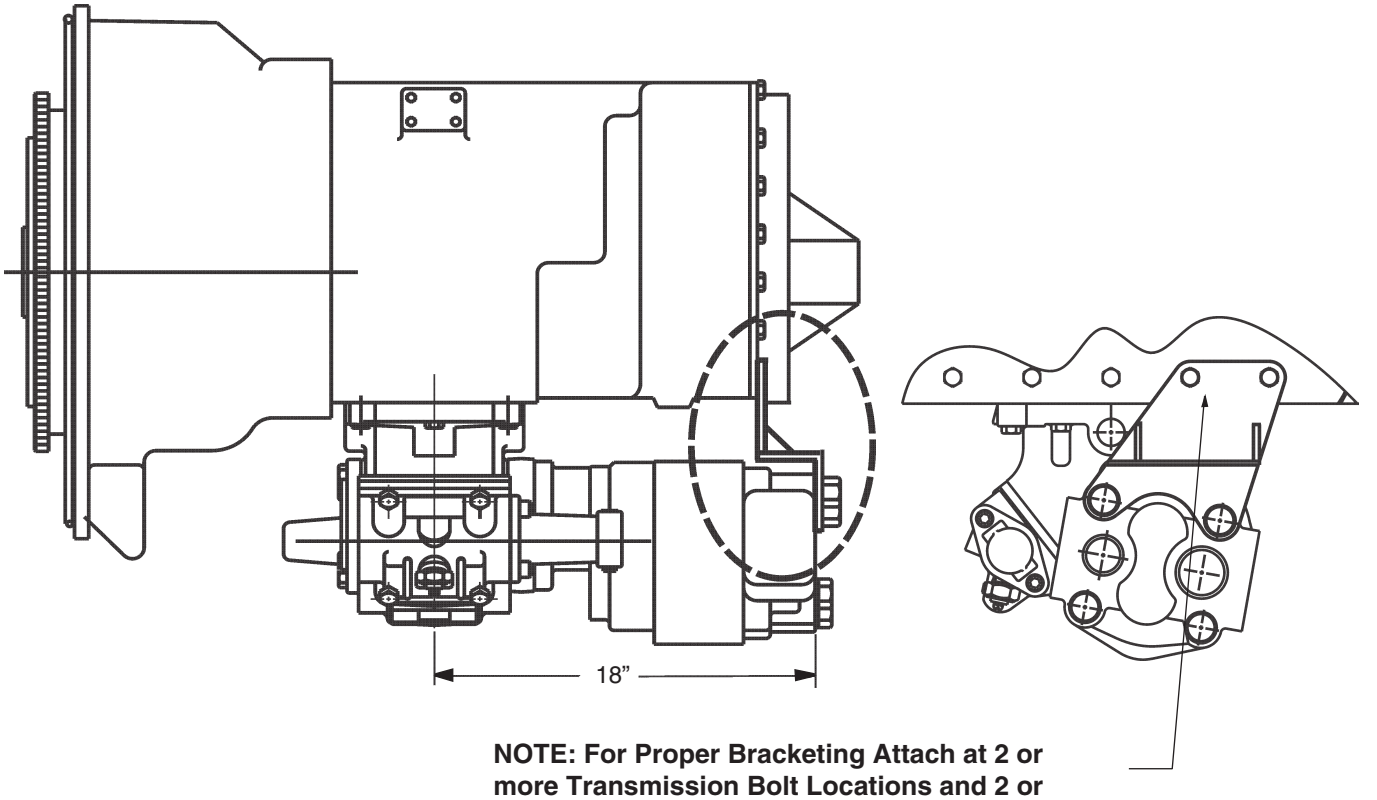

NOTE: For Proper Bracketing Attach at 2 or more Transmission Bolt Locations and 2 or more Pump Locations. Contact Transmission Manufacture for Proper Bracket Mounting Locations.

⚠ Use caution to ensure that bracket does not pre-load pump/P.T.O. mounting

Chelsea strongly recommends the use of pump supports (Support Brackets) in all applications. P.T.O. warranty will be void if a pump bracket is not used when:

1) The combined weight of pump, fittings and hose exceed **40 pounds.**
2) The combined length of the P.T.O. and pump is **18 inches** or more from the P.T.O. centerline to the end of the pump.

ALSO: Remember to pack the female pilot of the P.T.O. pump shaft with grease before installing the pump on the P.T.O. (reference Chelsea grease pack 379688)

⚠ This symbol warns of possible personal injury.

Parker Hannifin Corporation
Chelsea Products Division
Olive Branch, MS 38654 USA

CHELSEA® EATON FULLER FLR-58

RTAO-10710C-AC	RTAO-14710C-AS	RTLO-12713A	RTLO-14718B-T2	RTLO-14918B-AS	RTLO-16913-T2	RTLO-18718B	RTLO-18918B
RTAO-10710C-AS	RTAO-16710C-AS	RTLO-12913A	RTLO-14913-T2	RTLO-16713A	RTLO-16913A	RTLO-18718B-T2	RTLO-18918B-AS
RTAO-12710C-AC	RTF-12709H	RTLO-14713A	RTLO-14913A	RTLO-16713A-T2	RTLO-16918A-AS	RTLO-18913A	RTLO-20913A
RTAO-12710C-AS	RTF-13709H	RTLO-14713A-T2	RTLO-14918A-AS2	RTLO-16718B	RTLO-16918B	RTLO-18913A-T2	RTLO-20918A-AS
RTAO-14710C-AC	RTF-14709H	RTLO-14718B	RTLO-14918B	RTLO-16718B-T2	RTLO-16918B-AS	RTLO-18918A-AS	RTLO-20918B

BOTTOM SIDE ONLY | **RIGHT SIDE ONLY**

TRANSMISSION GEAR DATA:
BOT 8-Bolt Opening Gear FORWARD of Centerline
47 Teeth - SPUR

PITCH LINE TO APERTURE FACE:
.8050" (20.4500MM)

TRANSMISSION GEAR DATA:
R.H. 6-Bolt Opening Gear FORWARD of Centerline
45 Teeth - SPUR

PITCH LINE TO APERTURE FACE:
1.0850" (27.5600MM)

Caution: Application Approval Required for P.T.O. Output Shaft Speeds Above 2500 R.P.M.

BOTTOM Side P.T.O. Model	Inter. Torq.	Dir. Rot.	Engine % Hi	Engine % Rev	Filler Block	Adapter Assy.	Stud Kit	RIGHT Side P.T.O. Model	Inter. Torq.	Dir. Rot.	Engine % Hi	Engine % Rev	Filler Block	Adapter Assy.	Stud Kit
ONE SPEED - TWO GEAR - MECHANICAL SHIFT															
880XDAHX-*3 (17)	357	Opp	77				Furnished								
880XGAHX-*3 (18)	329	Opp	84				Furnished								
880XJAHX-*3 (19)	279	Opp	99				Furnished								
880XMAHX-*3 (20)	238	Opp	116				Furnished								
880XQAHX-*3 (21)	203	Opp	136				Furnished								
880XRAHX-*3 (22)	172	Opp	160				Furnished								
ONE SPEED - TWO GEAR - POWERSHIFT (AIR)															
230XAAJX-*3	250	Opp	50		328481X		Furnished	230XAAJX-*3	250	Opp	48				Furnished
230XBAJX-*3	250	Opp	66		328481X		Furnished	230XBAJX-*3	250	Opp	63				Furnished
230XDAJX-*3	250	Opp	76		328481X		Furnished	230XDAJX-*3	250	Opp	73				Furnished
230XKAJX-*3	250	Opp	103		328481X		Furnished	230XKAJX-*3	250	Opp	98				Furnished
230XQAJX-*3	203	Opp	136		328481X		Furnished	230XQAJX-*3	212	Opp	131				Furnished
230XUAJX-*3 (23)	126	Opp	218		328481X		Furnished	230XUAJX-*3 (23)	132	Opp	210				Furnished
236ZDAHX-*3 (7)	250	Opp	100		328564X		Furnished	236XDAHX-*3 (7)	250	Opp	96				Furnished
236ZKAHX-*3 (7)	215	Opp	129		328564X		Furnished	236XKAHX-*3 (7)	224	Opp	123				Furnished
885XBAHX-*3 (16)	423	Opp	65				Furnished								
885XGAHX-*3 (18)	329	Opp	84				Furnished								
885XJAHX-*3 (19)	279	Opp	99				Furnished								
885XMAHX-*3 (20)	238	Opp	116				Furnished								

① Transmission Models

- Models that apply to this application page.

② Transmission Gear Data

- Location of P.T.O. opening on the transmission and opening size (S.A.E. standard or non-standard).
- Gear position within the opening - either Gear to Rear of Centerline or Gear Forward of Centerline by 1/2 inch.

Front of Vehicle  Rear of Vehicle

Front of Vehicle  Rear of Vehicle

Parker Hannifin Corporation
Chelsea Products Division
Olive Branch, MS 38654 USA

- Description of the P.T.O. driver gear - tooth count of the gear and description of the cut of the gear teeth (Spur, Left Hand Helix, or Right Hand Helix).


SPUR - teeth are cut straight across from its face from the side


L.H. HELIX - teeth slant upwards from left to right


R.H. HELIX - teeth slant upwards from right to left

❸ Pitch Line to Aperture Face

- The distance between the pitch line of the transmission P.T.O. driver gear and the mounting face (aperture).

Pitch Line (P. L.) to Aperture Face (A.F.) Dimension

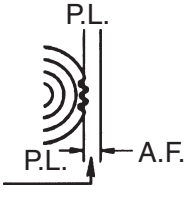

❹ P.T.O. Model

- The P.T.O.s listed are normally mounted to the transmission with the output shaft toward the rear of the vehicle, with the shaft below the center of the opening.
- To complete the model number refer to the Assembly Options charts in section 3.

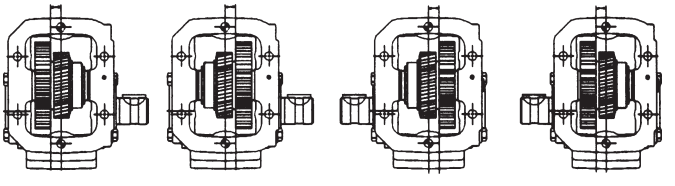

❺ Intermittent Torque Rating (shown in lbs. ft.)

- An intermittent torque rating is when the P.T.O. operates only 5 minutes out of every 15. A P.T.O. being used more than 5 minutes at a time is considered continuous duty and should have its torque rating reduced by 30%. To do this, multiply the given torque rating by .7 (i.e. 140 lbs. ft. x .7 = 98 lbs. ft.).

⑥ P.T.O. Direction of Rotation

- Viewed by standing at the rear of the vehicle, looking forward at the P.T.O. shaft, with the P.T.O. shaft pointing toward the rear of the vehicle.

P.T.O.	Driven Equipment
OPP (looks “clockwise”)	Driven equipment must rotate counterclockwise (also called left-hand rotation, “A” for anti-clockwise or C.C.W. for counterclockwise).
ENG (looks “counterclockwise”)	Driven equipment must rotate clockwise (also called right-hand rotation or “C” for clockwise).

- Remember that the P.T.O. is specified looking from the rear of the truck to the front of the truck, and the driven equipment is specified looking from the front of the truck to the rear of the truck.

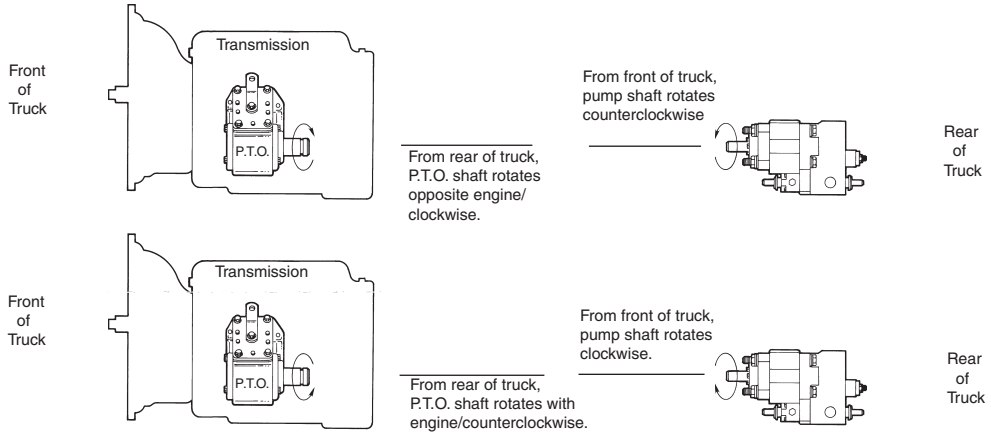

⑦ Shaft Speed Percentage

- The output shaft speed percentage is based upon engine R.P.M.
  Ex: If the engine speed is 1000 R.P.M. and the P.T.O. rating is 90% of engine speed, the P.T.O. output shaft will turn 900 R.P.M. (1000 x .90). If the engine speed is 1000 R.P.M. and the P.T.O. rating is 127% of engine speed, the P.T.O. output shaft will turn 1270 R.P.M. (1000 x 1.27).

NOTE: Output shaft speeds should not exceed 2500 R.P.M. without application approval from Chelsea.

Parker Hannifin Corporation
Chelsea Products Division
Olive Branch, MS 38654 USA

8 Filler Block

- If a filler block is required to properly mount the P.T.O. or an adapter, the correct part number will be shown here. It must be ordered separately from the P.T.O.
- If a (T) is shown next to the part number, the filler block should be positioned next to the transmission.
- If a (P) is shown next to the part number, the filler block should be positioned next to the Power Take-Off.

9 Adapter Assembly

- An adapter or adapter plate listed in this column is required to mount the P.T.O. to the transmission and must be ordered separately.
- Geared Adapters - used to change the rotation of the output shaft, clear an interference problem, or reach a drive gear that may be deep within the transmission.
- Adapter Plates - used to mount a six-bolt P.T.O. to an eight-bolt opening.
- A geared adapter should not be mounted to an adapter plate.
- Do not mount two or more geared adapters together.
- A geared adapter should not be used on automatic transmissions.

10 Stud Kit

- When the word *Furnished* appears in this column, the stud kit is included with the P.T.O.
- A stud kit number listed in this column (i.e. 7170-1X) means that the stud kit must be ordered separately from the P.T.O.

11 P.T.O. Header

- New P.T.O. headers with type of shift mechanism.
- Mechanical, Powershift (Air), Powershift (Hydraulic).

Information from the Customer:

1. Make and model of transmission.

   _____

2. Type of driven equipment.

   _____

3. Input horsepower required of driven equipment.

   _____

4. Desired operating speed of driven equipment.

   _____

5. Approximate engine speed desired during operation.

   Figure the equipment speed expressed as a percentage of the desired engine speed during the duty cycle.

   Driven equipment ÷ Engine speed = App. P.T.O.%

   _____

6. Direction of driven equipment shaft rotation in relation to direction of engine rotation (check one).

   _____ Opp.
   _____ Eng.

7. Type of connection between P.T.O. and driven equipment (check one).

   _____ Driveshaft
   _____ Direct mount pump flange
   _____ Pulleys and belts (requires eng. approval)

8. Mounting location (check all suitable locations).

   _____ Left
   _____ Right
   _____ Bottom
   _____ Top
   _____ Countershaft

9. Duty cycle (check one).

   _____ Intermittent
   _____ Continuous

10. Other P.T.O. speeds or reverse gear requirements.

    _____

    _____

Using the HY25-3000/US, Find:

11. Application page number for make and model of transmission.

    _____

12. From items 3 and 4 determine the intermittent torque requirements of the driven equipment using this formula:

    (HP x 5252) ÷ R.P.M. = lb. ft.

    T=_____ lb. ft. (intermittent)

13. If torque requirements are continuous (more than 5 minutes operation every 15 minutes) divide the torque figure by .7. The result will be the torque required for continuous operation.

    _____

14. Find the P.T.O. in the HY25-3000/US catalog that meets the torque, rotation, and speed percentage requirements of the application. Note the P.T.O. model number and all numbers for mounting parts on the lines below.

    _____

    _____

15. Determine what options are needed and change model number prefix and suffix to obtain correct options. (See Model Number Construction in section 3).

    _____

    _____

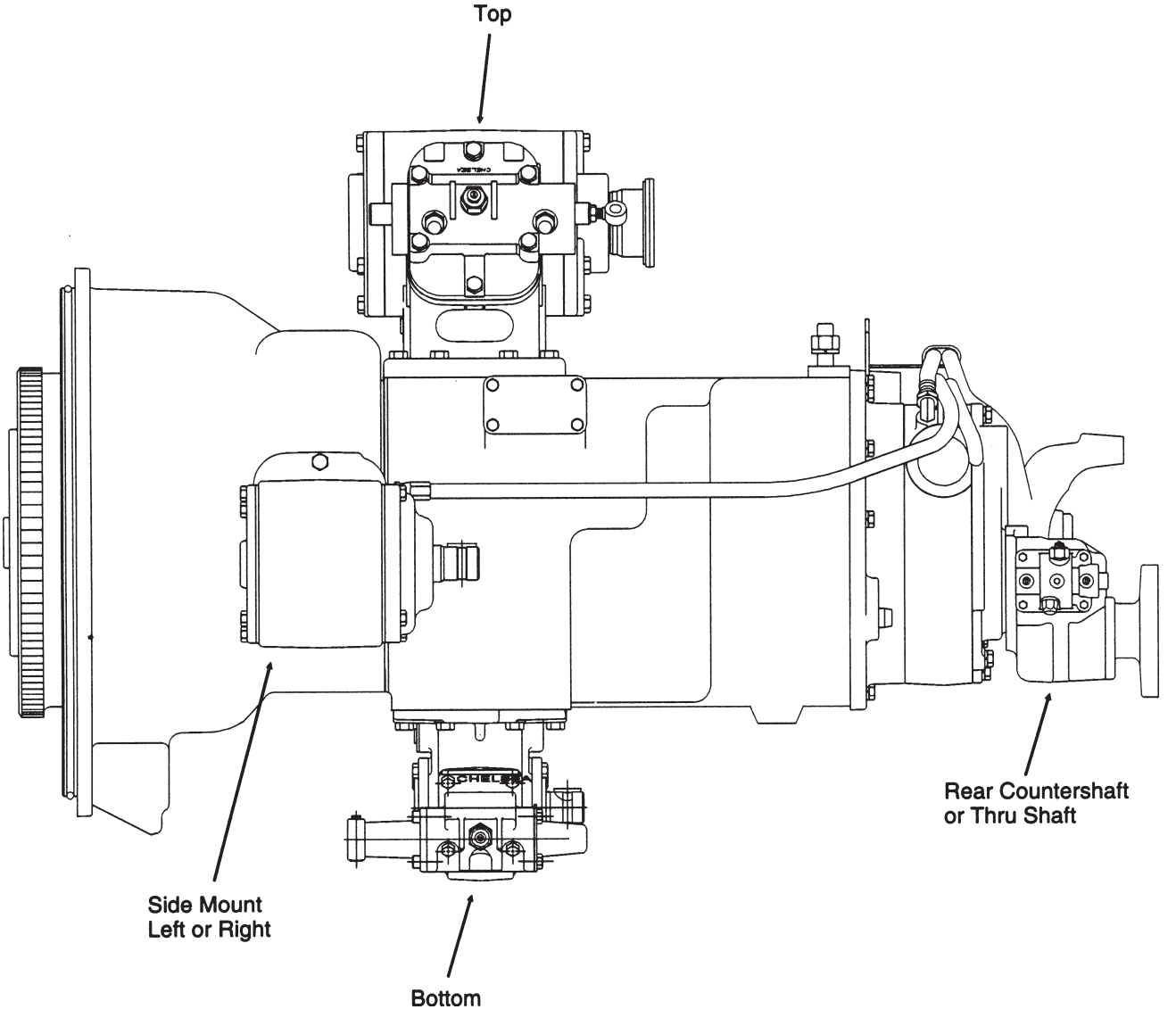

Parker Hannifin Corporation
Chelsea Products Division
Olive Branch, MS 38654 USA

AB	Universal
AC	Fiat
AD	Spicer
AG	Spicer
AH	Universal
AJ	Allison
AK	Universal
AL	Eaton Fuller
AP	Spicer
AQ	Spicer
AR	Spicer
AU	Chelsea
AW	New Process
AX	Eaton Fuller
BA	Navistar
BC	Eaton Fuller
BE	Chevy
BF	Warner
BG	Spicer
BH	Spicer
BJ	Chevy
BK	New Process
BL	New Process
BM	Eaton Fuller
BN	New Process
BP	Chevy/Spicer
BQ	Chevy/Spicer
BR	Hino
BS	New Process
BU	Eaton Fuller
BY	Warner
BZ	Warner
CB	New Process
CC	New Process
CD	Warner
CJ	Saab/Scania
CM	New Process
CR	Spicer
DA	Mack
DB	Eaton Fuller
DC	Hino/Nissan
DD	Spicer
DH	Renault
DJ	Renualt
DK	Renault
DM	Eaton Fuller
DN	Eaton Fuller
DQ	Saab/Scania
DS	Warner
DU	Eaton Fuller
DX	Chevrolet
DY	Clark
EC	ZF
ED	ZF
EF	New Process
EL	Isuzu
EP	Warner
ER	Isuzu
ES	Eaton Fuller
ET	Eaton Fuller
EV	Eaton Fuller
EW	Eaton Fuller
FA	Jatco/Isuzu
FB	GM/Chevy
FC	Dodge
FE	Getrag
FJ	Allison
FL	ZF
FM	Nissan
FN	Spicer
FP	Mack/Renault
FQ	Mack/Renault
FR	Eaton Fuller
FS	Hino
FT	Mitsubishi
FV	Isuzu
FW	Eaton Fuller
FZ	Hino
GE	Eaton Fuller
GF	Eaton Fuller
GP	Eaton Fuller
GQ	Tremec
GR	ZF
GS	ZF
GW	Nissan
GX	Adapter Gear
GX	Mitsubishi
GY	Adapter Gear
GZ	Adapter Gear
GZ	Eaton Fuller
HA	Adapter Gear
HA	Mitsubishi
HB	Adapter Gear
HB	Mitsubishi
HC	Mitsubishi
HD	Adapter Gear
HD	Mitsubishi
HD	Ford
HE	Adapter Gear
HF	Adapter Gear
HG	Adapter Gear
HH	Adapter Gear
HJ	Adapter Gear
HK	Adapter Gear
HL	Adapter Gear
HM	Adapter Gear
HP	Adapter Gear
HQ	Adapter Gear
HR	Adapter Gear
HU	Mack
HV	Allison
HY	ZF
HZ	Eaton Fuller
JB	Adapter Gear
JD	Tremic
JE	Adapter Gear
JG	Mercedes
JH	Mercedes
JK	Eaton Fuller
JL	Adapter Gear
JM	Eaton Fuller
JN	Adapter Gear
JP	NVG
JQ	Adapter Gear
JR	Eaton Fuller
JS	Spicer
JT	Spicer
JU	Spicer
JV	Eaton Fuller
JW	Eaton Fuller
JX	Adapter Gear
JY	Adapter Gear
JZ	Adapter Gear
KA	Adapter Gear
KB	Adapter Gear
KH	Mercedes
KJ	ZF
KK	Adapter Gear
KL	ZF
KM	Adapter Gear
KN	TTC
KP	TTC
KR	Adapter Gear
KS	Ford
KT	Universal
KU	Aisin
KV	Caterpillar

Notes

Parker Hannifin Corporation
Chelsea Products Division
Olive Branch, MS 38654 USA

Technical Information

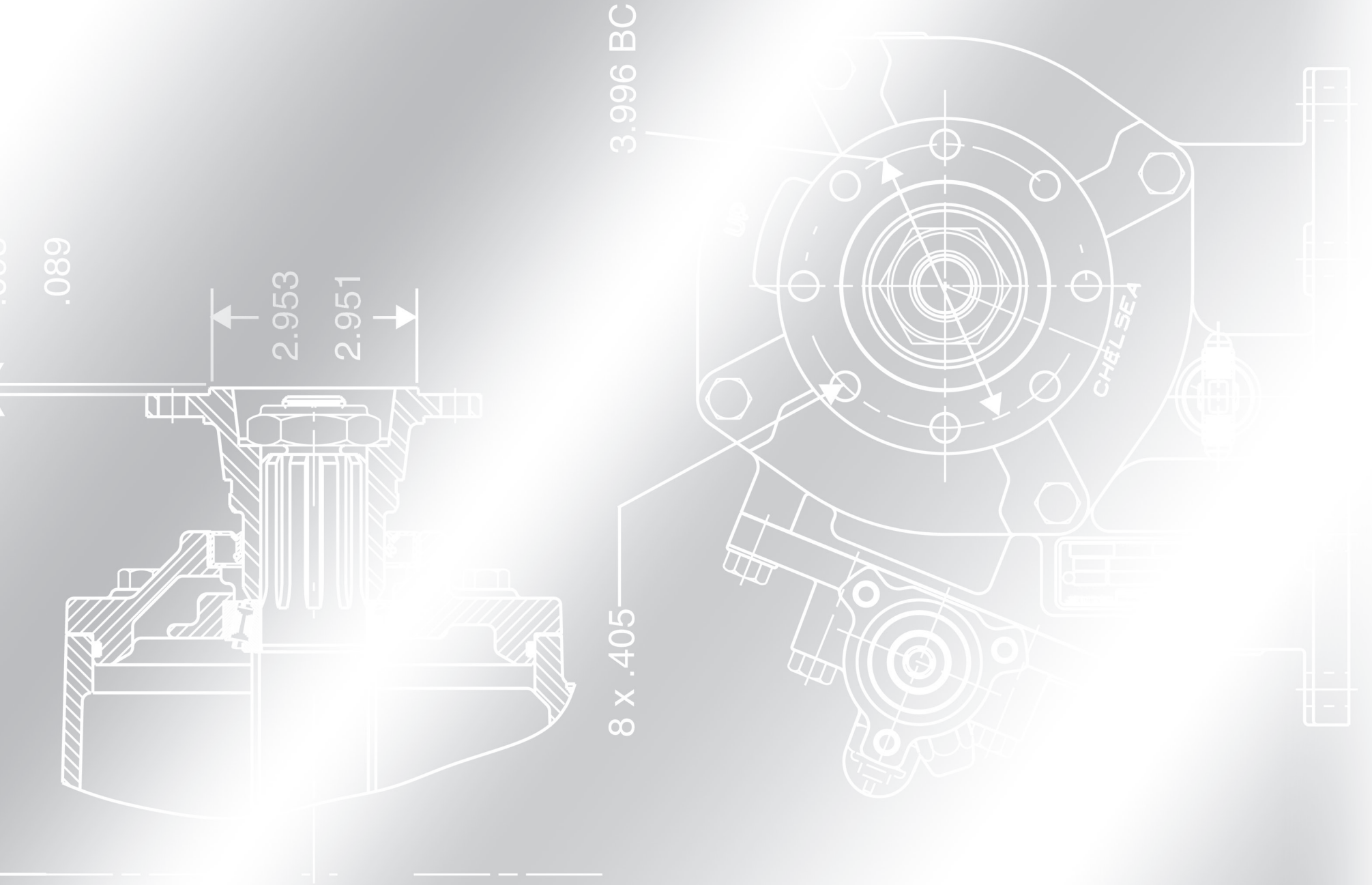

Parker Hannifin Corporation
Chelsea Products Division
Olive Branch, MS 38654 USA

Mechanical Six Bolt P.T.O.s
P.T.O. Options Chart ..... 2.1 thru 2.2
Pump Flange Field Conversion Chart ..... 2.3 thru 2.4
Flange Dimensions ..... 2.5 thru 2.15
Shifter Field Conversion Kits & Shift Cover Assemblies 2.16
Installation Kits & Filler Blocks 2.17

Mechanical Eight Bolt P.T.O.s
P.T.O. Options Chart ..... 2.18 thru 2.19
489 Pump Flange Conversion Chart 2.20
680 Pump Flange Conversion Chart 2.21
812/823/880 Pump Flange Conversion Chart 2.22
Flange Dimensions ..... 2.23 thru 2.29
Shifter Field Conversion Kits 2.30
Shift Cover Assemblies & Installation Kits 2.30
Filler Blocks 2.31

Powershift Six and Eight Bolt P.T.O.s
P.T.O. Options Chart ..... 2.32 thru 2.33
Installation Kits 2.33
Pump Flange Field Conversion Chart 2.34
Flange Dimensions ..... 2.35 thru 2.38

Powershift Ten Bolt P.T.O.s
P.T.O. Options Chart ..... 2.39 thru 2.40
Pump Flange Field Conversion Chart ..... 2.41 thru 2.42
Flange Dimensions
267 ..... 2.43 thru 2.52
277/278 ..... 2.53 thru 2.57
859 ..... 2.58 thru 2.59
867 ..... 2.60 thru 2.61

Ford P.T.O.s
P.T.O. Options Chart 2.62

Rear Mount P.T.O.s
P.T.O. Options Chart ..... 2.63 thru 2.68
Flange Dimensions
522 ..... 2.64
CAT-D ..... 2.65 thru 2.66
CAT-H ..... 2.67 thru 2.68

Dual Output P.T.O.s
P.T.O. Options Chart 2.69

Reversible P.T.O.s
P.T.O. Options Chart 2.69

Asia Pacific Transmission P.T.O.s
P.T.O. Options Chart 2.70
Pump Flange Field Conversion Chart 2.71
Field Conversion Kits 2.71
Cover Assemblies 2.71
Shifter Installation Kits 2.71

Split Shaft P.T.O.s
Split Shaft Specification Charts 2.72
Split Shaft P.T.O. Options Chart 2.72

Adapters
Guide to Specifying Geared Adapters 2.73
Standard Geared Adapters 2.74
Specifying Standard Geared Adapters ..... 2.75 thru 2.76
Kit-Style Dimensional Data ..... 2.77 thru 2.78
626 Gear Chart 2.79
628 Gear Chart 2.80
630 Gear Chart 2.80
645 Gear Chart 2.81
Geared Adapters & Plates for Import Transmission 2.82

Kits
Gasket Kits 2.83
Gasket & Seal Kits 2.84
Mounting Kits 2.85

P.T.O. Shift Options 2.86

Dump Pump General Specifications 2.87

6-Bolt Mechanical

P.T.O. Options Chart – 6-Bolt P.T.O.s

P.T.O. Series		100	221	2442	290
Lubrication					
X	Standard	x	x		x
P	Pressure		x		
W	Wet Spline		x		
Shifting					
A	Air	x	x	x	x
C	Heavy Duty Bracket Less Cable	x	x		
G	Air Shift w/cyl. Location Opposite of Output				
H	Less Wire Shift		x	x	x
M	Constant Mesh		x	x	
P	Electric/Air 12V	x	x	x	x
S	P.T.O./Dump Pump Combo	x	x	x	x
T	P.T.O. & Pump Valve Less Kick Out & Neutral Spring Return				
V	Air Shift Less Installation Kit	x	x	x	x
W	Wire	x	x	x	
X	Wire, Less Cable & Knob		x	x	
Output					
AA	Special Pump for Europe		x	x	x
AF	S.A.E. “B” 2 or 4 Bolt Flange, “BB” Shaft (1.00" 15 - Tooth)		x(w)	x	x
AK	S.A.E. “B” 2 Bolt Flange, “B” Shaft (7/8" 13 - Tooth)		x	x	x
AZ	Non Standard Flange, “C” Shaft (1-1/4" 14 - Tooth)		x	x	x
GA	Rotatable “B” 2 Bolt Flange, “B” Shaft (7/8" 13 - Tooth) (Greaseable)		x	x	
GB	Rotatable “B” 4 Bolt Flange, “B” Shaft (7/8" 13 - Tooth) (Greaseable)		x	x	
GE	Rotatable S.A.E. “A” 2 or 4 Bolt Flange, “A” Shaft (5/8" 9 - Tooth) (Greaseable)		x	x	
GF	S.A.E. “B” 2 or 4 Bolt Flange, “BB” Shaft (1.00" 15 - Tooth) (Greaseable)		x	x	
GH	Rotatable “B” 2 Bolt Flange, “BB” Shaft (1.00" 15 - Tooth) (Greaseable)		x	x	x
GJ	Rotatable “B” 4 Bolt Flange, “BB” Shaft (1.00" 15 - Tooth) (Greaseable)		x	x	x
GK	S.A.E. “B” 2 or 4 Bolt Flange, “B” Shaft (7/8" 13 - Tooth) (Greaseable)		x	x	
GP	S.A.E. “A” 2 Bolt Flange, “B” Shaft (7/8" 13 - Tooth) (Greaseable)		x	x	
GQ**	S.A.E. “B” 2 or 4 Bolt Flange, “B” Shaft (7/8" 13 - Tooth) (Greaseable)		x	x	
GR	Chelsea Special Pump Mount, “B” Shaft (7/8" 13 - Tooth) (Greaseable)		x	x	
GY	DIN 5462 Pump Mounting (Greaseable)		x	x	
GZ	Non Standard Flange, “C” Shaft (1-1/4" 14 - Tooth) (Greaseable)		x	x	
LA	S.A.E. “B” 2 Bolt Flange w/Lube Pump (Same as AK)		x	x	
LB	S.A.E. “A” 2 Bolt Flange w/Lube Pump (Same as XP)		x	x	
LC	S.A.E. “A” 2 Bolt Flange w/Lube Pump (Same as XQ)		x	x	
LD	1-1/4" Round Shaft w/Lube Pump (Same as XD)		x	x	
LF	S.A.E. “B” 2 or 4 Bolt Flange w/Lube Pump (Same as XK)		x	x	
RA	Rotatable “B” 2 Bolt Flange, “B” Shaft (7/8" 13 - Tooth)		x	x	x
RB	Rotatable “B” 4 Bolt Flange, “B” Shaft (7/8" 13 - Tooth)		x	x	x
RC	Rotatable “A” 2 Bolt Flange, “A” Shaft (5/8" 9 - Tooth)		x	x	x
RD	Rotatable “A” 2 Bolt Flange, “B” Shaft (7/8" 13 - Tooth)		x	x	x
RE	Rotatable “B” 4 Bolt Flange, “BB” Shaft (1.00" 15 - Tooth)		x	x	x
RF	Rotatable “B” 2 Bolt Flange, “BB” Shaft (1.00" 15 - Tooth)		x	x	x
RY	Rotatable DIN 5462 Pump Flange			x	x
SQ	S.A.E. “B” 4 Bolt Flange, “B” Shaft (7/8" 13 - Tooth)				
XA	7/8" Round Shaft w/key	x			
XD	1-1/4" Round Shaft		x	x	x
XE	S.A.E. “A” 2 or 4 Bolt Flange, “A” Shaft (5/8" 9 - Tooth)		x	x	x
XG	Non Standard S.A.E. “B” 2 Bolt Flange, Non Standard Shaft (3/4" w/ 3/16" key)		x	x	x
XJ	Non Standard S.A.E. “A” 2 Bolt Flange, Non Standard Shaft (3/4" w/ 3/16" key)		x	x	x
XK	S.A.E. “B” 2 or 4 Bolt Flange, “B” Shaft (7/8" 13 - Tooth)		x	x	x
XQ**	S.A.E. “B” 2 or 4 Bolt Flange, “B” Shaft (7/8" 13 - Tooth)		x	x	
XR	Non Standard Flange, “B” Shaft (7/8" 13 - Tooth)		x	x	x
XV	1-1/4" Rd. w/1310 Series Flanges			x	
XX***	1-1/4" S.A.E. Tapered Shaft w/ keyway		x	x	x
XY	DIN 5462 Pump Mounting		x	x	x

(w) = Wet Spline Flange Option
** XQ/GQ same as XK/GK except flange rotated 90°
*** Order companion (3-1-604) separately
NOTE: Always Check Price Book for Current Options

Continued on next page

P.T.O. Options Chart – 6-Bolt P.T.O.s

P.T.O. Series		442	447	660
Lubrication				
X	Standard	x	x	x
P	Pressure	x	x	x
Shifting				
A	Air	x	x	x
C	Heavy Duty Bracket Less Cable	x	x	x
H	Less Wire Shift	x	x	x
M	Constant Mesh	x	x	x
P	Electric/Air 12V	x	x	x
S	P.T.O./Dump Pump Combo	x	x	x
T	P.T.O. & Pump Valve Less Kick Out & Neutral Spring Return	x	x	x
V	Air Shift Less Installation Kit	x	x	x
W	Wire	x	x	x
X	Wire, Less Cable & Knob	x	x	x
Output				
AA	Special Pump for Europe	x	x	x
AF	S.A.E. “B” 2 or 4 Bolt Flange, “BB” Shaft (1.00" 15 - Tooth)	x	x	x
AK	S.A.E. “B” 2 Bolt Flange, “B” Shaft (7/8" 13 - Tooth)	x	x	x
AZ	Non Standard Flange, “C” Shaft (1-1/4" 14 - Tooth)	x	x	x
GA	Rotatable “B” 2 Bolt Flange, “B” Shaft (7/8" 13 - Tooth) (Greaseable)	x	x	x
GB	Rotatable “B” 4 Bolt Flange, “B” Shaft (7/8" 13 - Tooth) (Greaseable)	x	x	x
GE	Rotatable S.A.E. “A” 2 or 4 Bolt Flange, “A” Shaft (5/8" 9 - Tooth) (Greaseable)	x	x	x
GF	S.A.E. “B” 2 or 4 Bolt Flange, “BB” Shaft (1.00" 15 - Tooth) (Greaseable)	x	x	x
GH	Rotatable “B” 2 Bolt Flange, “BB” Shaft (1.00" 15 - Tooth) (Greaseable)	x	x	x
GJ	Rotatable “B” 4 Bolt Flange, “BB” Shaft (1.00" 15 - Tooth) (Greaseable)	x	x	x
GK	S.A.E. “B” 2 or 4 Bolt Flange, “B” Shaft (7/8" 13 - Tooth) (Greaseable)	x	x	x
GP	S.A.E. “A” 2 Bolt Flange, “B” Shaft (7/8" 13 - Tooth) (Greaseable)	x	x	x
GQ**	S.A.E. “B” 2 or 4 Bolt Flange, “B” Shaft (7/8" 13 - Tooth) (Greaseable)	x	x	x
GR	Chelsea Special Pump Mount, “B” Shaft (7/8" 13 - Tooth) (Greaseable)	x	x	x
GY	DIN 5462 Pump Mounting (Greaseable)	x	x	x
GZ	Non Standard Flange, “C” Shaft (1-1/4" 14 - Tooth) (Greaseable)	x	x	x
LA	S.A.E. “B” 2 Bolt Flange w/Lube Pump (Same as AK)	x	x	x
LB	S.A.E. “A” 2 Bolt Flange w/Lube Pump (Same as XP)	x	x	x
LC	S.A.E. “A” 2 Bolt Flange w/Lube Pump (Same as XQ)	x	x	x
LD	1-1/4” Round Shaft w/Lube Pump (Same as XD)	x	x	x
LF	S.A.E. “B” 2 or 4 Bolt Flange w/Lube Pump (Same as XK)	x	x	x
RA	Rotatable “B” 2 Bolt Flange, “B” Shaft (7/8" 13 - Tooth)	x	x	x
RB	Rotatable “B” 4 Bolt Flange, “B” Shaft (7/8" 13 - Tooth)	x	x	x
RC	Rotatable “A” 2 Bolt Flange, “A” Shaft (5/8" 9 - Tooth)	x	x	x
RD	Rotatable “A” 2 Bolt Flange, “B” Shaft (7/8" 13 - Tooth)	x	x	x
RE	Rotatable “B” 4 Bolt Flange, “BB” Shaft (1.00" 15 - Tooth)	x	x	x
RF	Rotatable “B” 2 Bolt Flange, “BB” Shaft (1.00" 15 - Tooth)	x	x	x
RY	Rotatable DIN 5462 Pump Flange	x	x	x
SQ	S.A.E. “B” 4 Bolt Flange, “B” Shaft (7/8" 13 - Tooth)	x		
XD	1-1/4" Round Shaft w/1/4" Key Way	x	x	x
XE	S.A.E. “A” 2 or 4 Bolt Flange, “A” Shaft (5/8" 9 - Tooth)	x	x	x
XG	Non Standard S.A.E. “B” 2 Bolt Flange, Non Standard Shaft (3/4" w/ 3/16" key)	x	x	x
XJ	Non Standard S.A.E. “A” 2 Bolt Flange, Non Standard Shaft (3/4" w/ 3/16" key)	x	x	x
XK	S.A.E. “B” 2 or 4 Bolt Flange, “B” Shaft (7/8" 13 - Tooth)	x	x	x
XQ**	S.A.E. “B” 2 or 4 Bolt Flange, “B” Shaft (7/8" 13 - Tooth)	x	x	x
XR	Non Standard Flange, “B” Shaft (7/8" 13 - Tooth)	x	x	x
XV	1-1/4" Rd. w/1410 Series Flange	x		x
XX***	1-1/4" S.A.E. Tapered Shaft w/ keyway	x	x	x
XY	DIN 5462 Pump Mounting	x	x	x

(w) = Wet Spline Flange Option
** XQ/GQ same as XK/GK except flange rotated 90°
*** Order companion (3-1-604) separately
NOTE: Always Check Price Book for Current Options

For converting the 221, 267, 290, 442, 447, 489, 660 and 2442 Series Chelsea P.T.O.s from a driveshaft output or as listed to a new pump flange output, use the following kits. Consult the Chelsea price book for availability by series.

Pump Flange Field Conversion Kits

Pump Suffix	Kit No. Suffix	Kit Number	Flange Type	Shaft Type
AF	XD to AF	328591-30X	S.A.E. “BB” 2 or 4 Bolt	1.00" - 15 Tooth Splined
AF (Wet Spline 221)	XD to AF	328591-140X	S.A.E. “BB” 2 or 4 Bolt	1.00" - 15 Tooth Splined
AK	XD to AK	328591-28X	S.A.E. “B” 2 Bolt	7/8" - 13 Tooth Splined
AK (“B” Ratio)	XD to AK	329436-7X	S.A.E. “B” 2 Bolt	7/8" - 13 Tooth Splined
AZ	XD to AZ	328591-70X	S.A.E. “B” 4 Bolt	1 1/4" - 14 Tooth Splined
GA	XD to GA XR to GA RA to GA	328591-72X 328591-73X 328591-106X	S.A.E. “B” 2 Bolt	*7/8" - 13 Tooth Internal Spline
GB	XD to GB XR to GB RB to GB	328591-74X 328591-75X 328591-107X	S.A.E. “B” 4 Bolt	*7/8" - 13 Tooth Internal Spline
GF	XD to GF AF to GF	328591-71X 328591-108X	S.A.E. “BB” 2 or 4 Bolt	*1.00" - 15 Tooth Internal Spline
GH	XD to GH RF to GH	328591-116X 328591-114X	S.A.E. “BB” 2 Bolt Rotatable	*1.00" - 15 Tooth Internal Spline
GJ	XD to GJ RE to GJ	328591-138X 328591-114X	S.A.E. “B” 4 Bolt Rotatable	*1.00" - 15 Tooth Splined
GK	XD to GK XK to GK	328591-89X 328591-86X	S.A.E. “B” 2 or 4 Bolt	*7/8" - 13 Tooth Internal Spline
GP	XD to GP XP to GP	358591-90X 328591-86X	S.A.E. “A” 2 Bolt	*7/8" - 13 Tooth Internal Spline
GQ	XD to GQ XQ to GQ	328591-91X 328591-86X	S.A.E. “B” 2 or 4 Bolt	*7/8" - 13 Tooth Internal Spline
GR	XD to GR	328591-76X	CHELSEA SPECIAL 4 Bolt	*7/8" - 13 Tooth Internal Spline
GY	XD to GY XY to GY	328591-92X 328591-87X	DIN 5462 Pump Mounting	*DIN 5462 Spline
GZ	XD to GZ AZ to GZ	328591-93X 328591-88X	S.A.E. “B” 4 Bolt	*1 1/4" - 14 Tooth Splined
GA (660 Series)	XD to GA RA to GA	328591-124X 328591-109X	S.A.E. “B” 2 Bolt	*7/8" - 13 Tooth Splined
GB (660 Series)	XD to GB RG to GB	328591-125X 328591-110X	S.A.E. “B” 4 Bolt	*7/8" - 13 Tooth Splined
GF (660 Series)	XD to GF AF to GF	328591-123X 329591-111X	S.A.E. “BB” 2 or 4 Bolt	*1.00" - 15 ToothSplined
GH (660 Series)	XD to GH RF to GH	328591-117X 328591-115X	S.A.E. “BB” 2 Bolt Rotatable	*1.00" - 15 Tooth Splined
GJ (660 Series)	XD to GJ RE to GJ	328591-139X 328591-115X	S.A.E. “B” 4 Bolt Rotatable	*1.00" - 15 Tooth Splined
GK (660 Series)	XD to GK XK to GK	328591-99X 328591-96X	S.A.E. “B” 2 or 4 Bolt	*7/8" - 13 Tooth Splined
GP (660 Series)	XD to GP XP to GP	328591-100X 328591-96X	S.A.E. “A” 2 Bolt	*7/8" - 13 Tooth Splined
GQ (660 Series)	XD to GQ XQ to GQ	328591-101X 328591-96X	S.A.E. “B” 2 or 4 Bolt	*7/8" - 13 Tooth Splined
GR (660 Series)	XD to GR	328591-126X	CHELSEA SPECIAL 4 Bolt	*7/8" - 13 Tooth Splined
GY (660 Series)	XD to GY XY to GY	328591-102X 329591-97X	DIN 5462 Pump Mounting	*DIN 5462 Spline
GZ (660 Series)	XD to GZ AZ to GZ	328591-103X 328591-98X	S.A.E. “B” 4 Bolt	*1 1/4" - 14 Tooth Splined
LA (AK w/Lube Pump)		328591-44X	S.A.E. “B” 2 Bolt	7/8" - 13 Tooth Splined
LB (XP w/Lube Pump)		328591-45X	S.A.E. “A” 2 Bolt	7/8" - 13 Tooth Splined
LC (XQ w/Lube Pump)		328591-46X	S.A.E. “B” 2 or 4 Bolt	7/8" - 13 Tooth Splined
LF (XK w/Lube Pump)		328591-48X	S.A.E. “B” 2 or 4 Bolt	7/8" - 13 Tooth Splined

Note: Use 329097-1X to convert P.T.O.s with AK, XP, XQ, XN, or XK output to the self-lube pump option.

*Grease fitting on end of shaft

Continued on next page

Pump Flange Field Conversion Kits

Pump Suffix	Kit No. Suffix	Kit Number	Flange Type	Shaft Type
RA	XD to RA	328591-55X	S.A.E. “B” 2 Bolt Rotatable	7/8" - 13 Tooth Internal Spline
	XR to RA	328591-53X	S.A.E. “B” 2 Bolt Rotatable	7/8" - 13 Tooth Internal Spline
RA (“B” Ratio)	XD to RA	329436-1X	S.A.E. “B” 2 Bolt Rotatable	7/8" - 13 Tooth Internal Spline
RB	XD to RB	328591-56X	S.A.E. “B” 4 Bolt Rotatable	7/8" - 13 Tooth Internal Spline
	XR to RB	328591-54X	S.A.E. “B” 4 Bolt Rotatable	7/8" - 13 Tooth Internal Spline
RB (“B” Ratio)	XD to RB	329436-2X	S.A.E. “B” 4 Bolt Rotatable	7/8" - 13 Tooth Internal Spline
RC	XD to RC	328591-112X	S.A.E. “A” 2 Bolt Rotatable	5/8" - 9 Tooth Splined
RD	XD to RD	328591-113X	S.A.E. “A” 2 Bolt Rotatable	7/8" - 13 Tooth Splined
RE	XD to RE	328591-134X	S.A.E. “B” 4 Bolt Rotatable	1.00" - 15 Tooth Splined
RF	XD to RF	328591-78X	S.A.E. “BB” 2 Bolt Rotatable	1.00" - 15 Tooth Splined
RY	XD to RY	328591-131X	DIN 5462 Pump Mounting Rotatable	DIN 5462 Spline
XE	XD to XE	328591-27X	S.A.E. “A” 2 or 4 Bolt	5/8" - 9 Tooth Splined
XG	XD to XG	328591-10X	Non-Standard 2 Bolt	3/4" Round
XJ	XD to XJ	328591-11X	Non-Standard 2 Bolt	3/4" Round
XK	XD to XK	328591-16X	S.A.E. “B” 2 or 4 Bolt	7/8" - 13 Tooth Splined
XK (“B” Ratio)	XD to XK	329436-3X	S.A.E. “B” 2 or 4 Bolt	7/8" - 13 Tooth Splined
XQ	XD to XQ	328591-17X	S.A.E. “B” 2 or 4 Bolt	7/8" - 13 Tooth Splined
XQ (“B” Ratio)	XD ro XQ	329436-6X	S.A.E. “B” 2 or 4 Bolt	7/8" - 13 Tooth Splined
XR	XD to XR	328591-52X	Chelsea Special	7/8" - 13 Tooth Splined
XV	XD to XV	328591-130X	1410 Companion Flange	1-1/4" Round
XX	XD to XX	328591-122X	1410 Companion Flange	1-1/4" S.A.E. Tapper
XY	XD to XY	328591-121X	DIN 5462 Pump Mounting	DIN 5462 Spline

Note: Use 329097-1X to convert P.T.O.s with AK, XP, XQ, XN, or XK output to the self-lube pump option.

*Grease fitting on end of shaft

Six Bolt P.T.O. Flanges

Suffix AA
Special pump flange for Europe

Available for the following P.T.O.s:
221, 441, 442, 447, 660, 2442

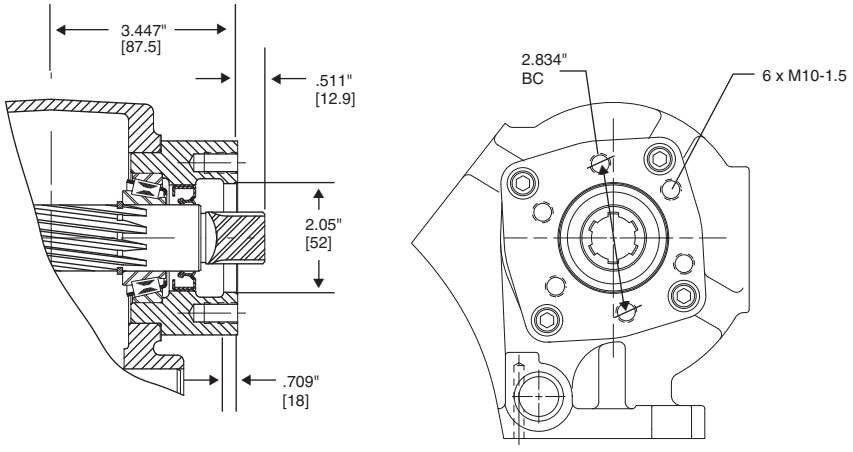

Suffix AF
S.A.E. Class “BB” 2 or 4 Bolt
For 1" - 15 Splined Shaft

Available for the following P.T.O.s:
221, 260, 290, 441, 442, 447,
489, 2442

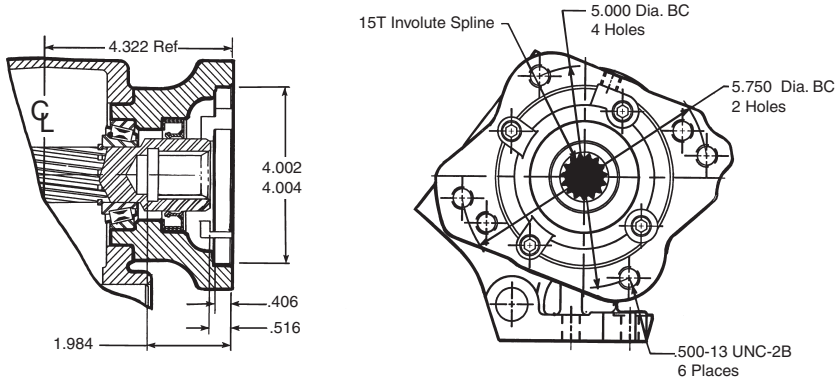

Suffix AK
S.A.E. Class “B” 2 Bolt
For 7/8" - 13 Tooth Splined Shaft

Available for the following P.T.O.s:
221, 260, 290, 441, 442, 447,
489, 2442

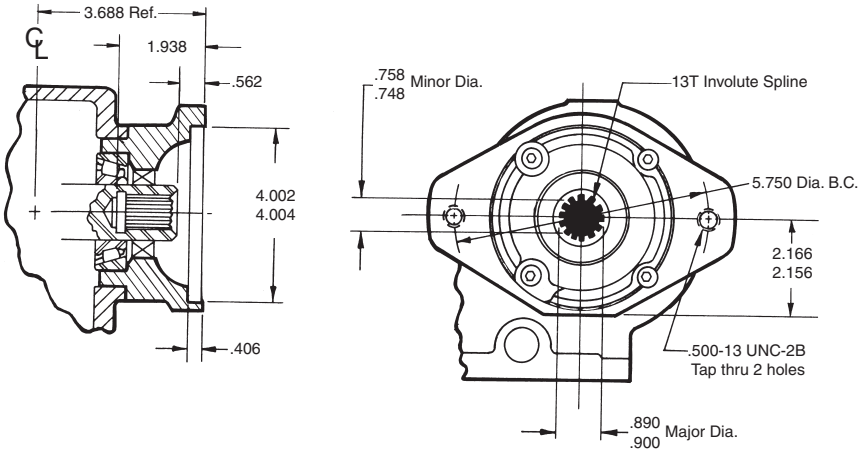

* Recommended Grease: Texaco Coupling Grease, Code 1912 or Equivalent

NOTE: PUMP INSTALLATION PRECAUTIONS
Use a bracket to support the pump to the transmission if:
- The pump weighs 40 pounds or more.
- The combined length of the P.T.O. and pump is 18 inches or more from the P.T.O. centerline to the end of the pump.

Also remember to pack the female pilot of the P.T.O. pump flange with grease before installing the pump on the P.T.O.

Suffix AZ

Non Standard 4 Bolt
For 1-1/4" - 14 Tooth Splined Shaft

Available for the following P.T.O.s:
221, 260, 290, 441, 442, 447,
489, 2442

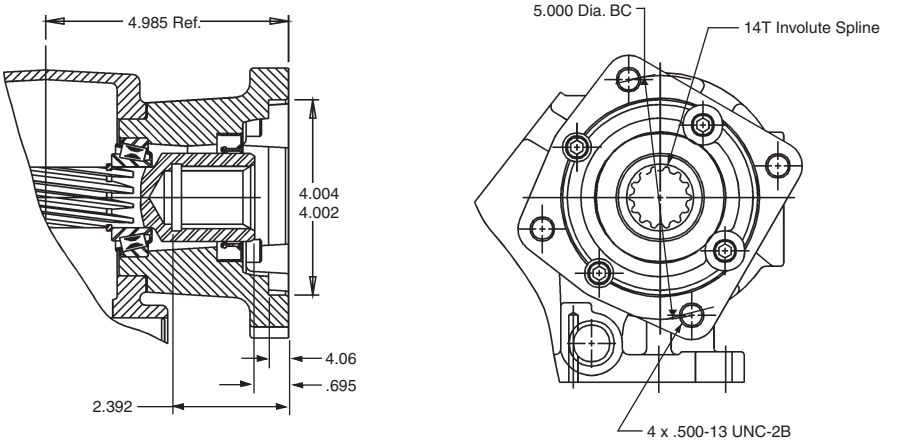

Suffix GA

S.A.E. Class “B” 2 Bolt Rotatable
For 7/8" - 13 Tooth Splined Shaft,
(*Greaseable)

Available for the following P.T.O.s:
221, 260, 290, 441, 442, 447, 489,
660, 2442

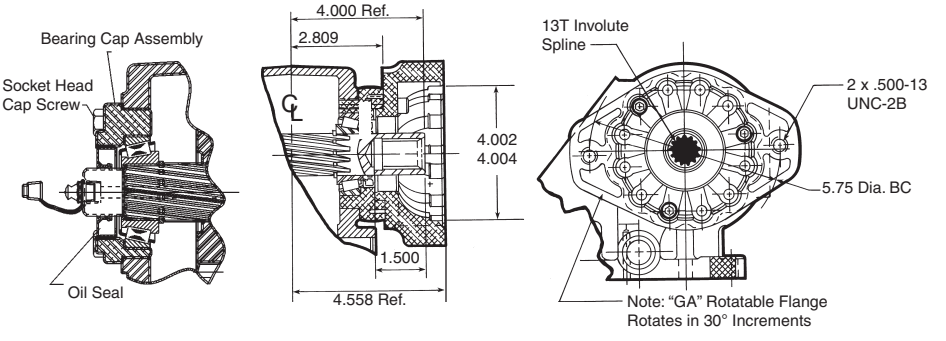

Suffix GB

S.A.E. Class “B” 4 Bolt Rotatable
For 7/8" - 13 Tooth Splined Shaft,
(*Greaseable)

Available for the following P.T.O.s:
221, 260, 290, 441, 442, 447, 489,
660, 2442

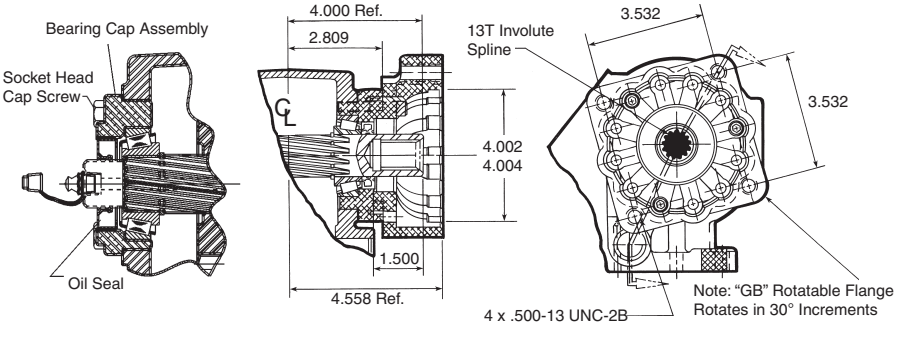

* Recommended Grease: Texaco Coupling Grease, Code 1912 or Equivalent

NOTE: PUMP INSTALLATION PRECAUTIONS
Use a bracket to support the pump to the transmission if:

- The pump weighs 40 pounds or more.
- The combined length of the P.T.O. and pump is 18 inches or more from the P.T.O. centerline to the end of the pump.

Also remember to pack the female pilot of the P.T.O. pump flange with grease before installing the pump on the P.T.O.

Suffix GE

S.A.E. Class “A” 2 or 4 Bolt
For 5/8" - 9 Tooth Splined Shaft,
(*Greaseable)

Available for the following P.T.O.s:
221, 260, 442, 447, 489, 2442

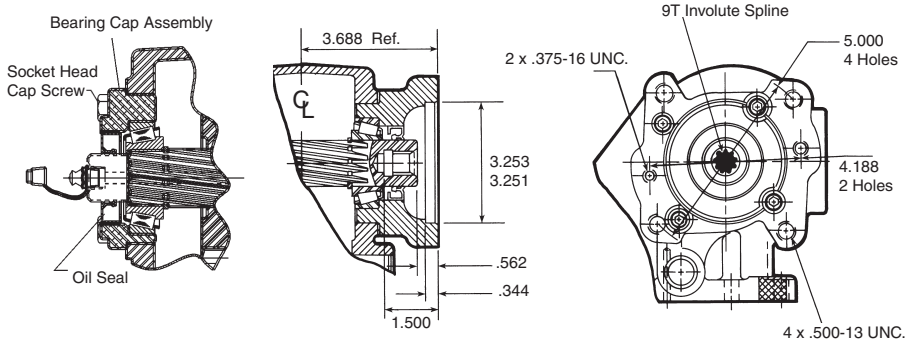

Suffix GJ

S.A.E. Class “B” 4 Bolt Rotatable
For 1.00" - 15 Tooth Splined Shaft,
(*Greaseable)

Available for the following P.T.O.s:
221, 260, 441, 442, 447, 2442

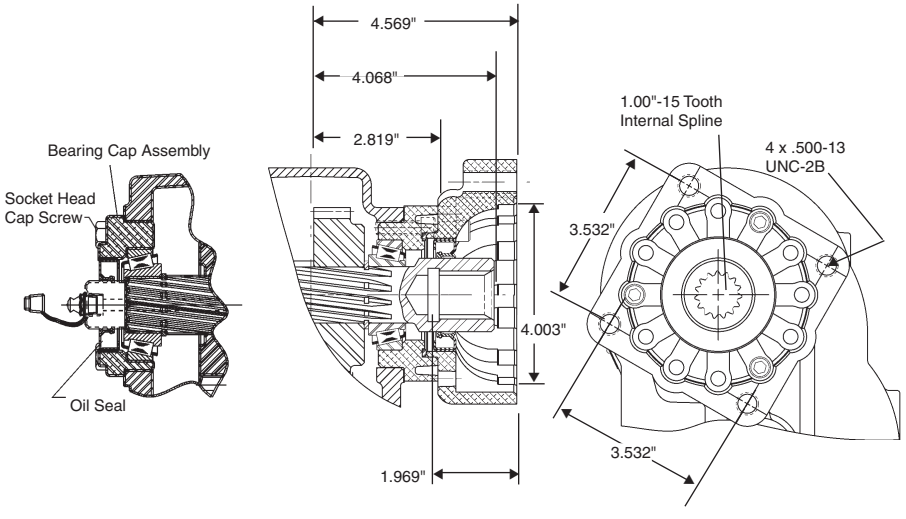

Note: “GJ” Rotatable Flange
Rotates in 90° Increments

Suffix GF

S.A.E. Class “BB” 2 or 4 Bolt
For 1" - 15 Tooth Splined Shaft,
(*Greaseable)

Available for the following P.T.O.s:
221, 260, 441, 442, 447, 489,
660, 2442

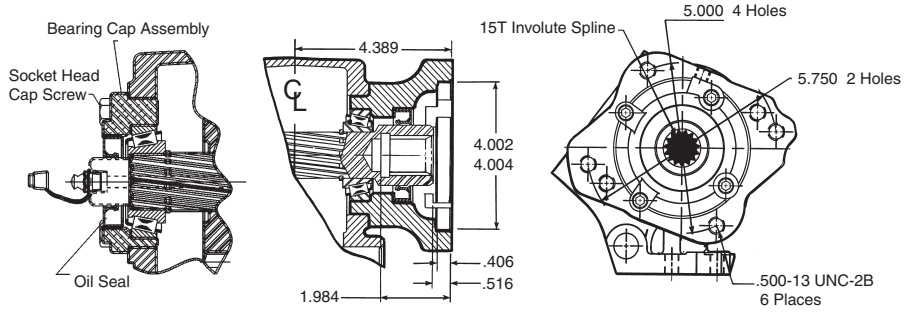

* Recommended Grease: Texaco Coupling Grease, Code 1912 or Equivalent

NOTE: PUMP INSTALLATION PRECAUTIONS
Use a bracket to support the pump to the transmission if:

- The pump weighs 40 pounds or more.
- The combined length of the P.T.O. and pump is 18 inches or more from the P.T.O. centerline to the end of the pump.

Also remember to pack the female pilot of the P.T.O. pump flange with grease before installing the pump on the P.T.O.

Suffix GH

S.A.E. Class “BB” 2 Bolt Rotatable
For 1" - 15 Tooth Splined Shaft,
(*Greaseable)

Available for the following P.T.O.s:
221, 260, 441, 442, 447, 489,
660, 2442

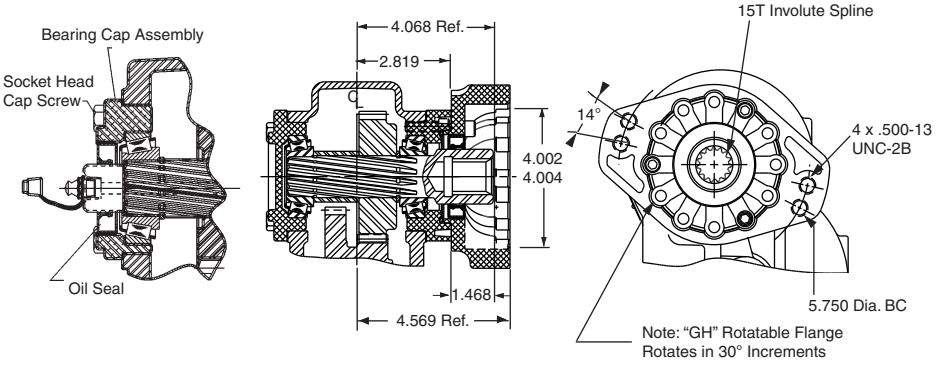

Suffix GK

S.A.E. Class “B” 2 or 4 Bolt
For 7/8" - 13 Tooth Splined Shaft,
(*Greaseable)

Available for the following P.T.O.s:
221, 260, 290, 441, 442, 447,
489, 660, 2442

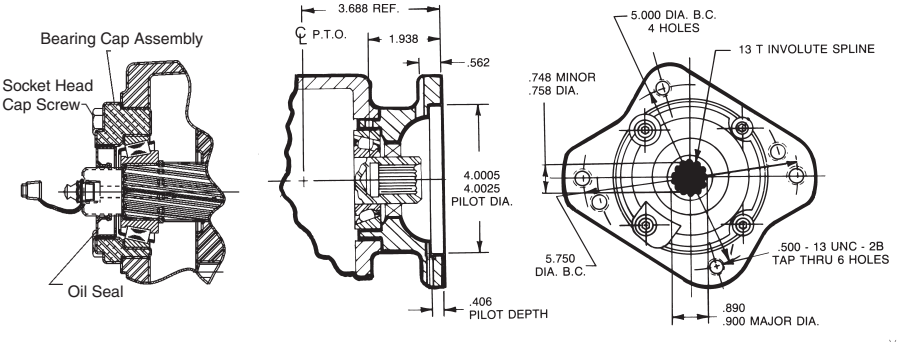

Suffix GP

S.A.E. Class “A” 2 Bolt
For 7/8" - 13 Tooth Splined Shaft,
(*Greaseable)

Available for the following P.T.O.s:
221, 230, 260, 441, 442, 447, 489,
660, 2442

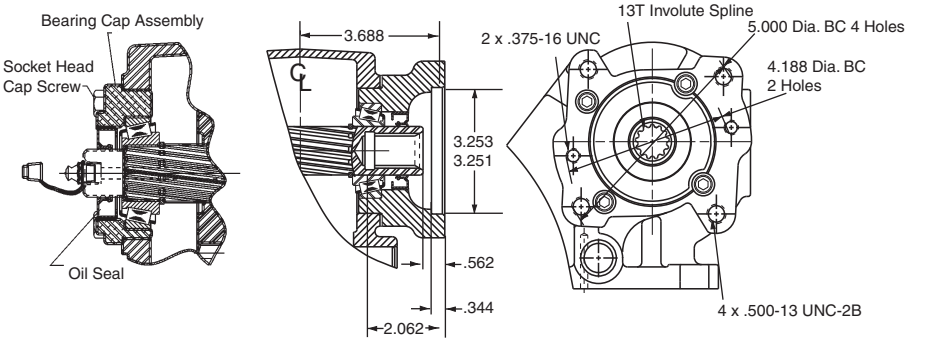

* Recommended Grease: Texaco Coupling Grease, Code 1912 or Equivalent

NOTE: PUMP INSTALLATION PRECAUTIONS
Use a bracket to support the pump to the transmission if:

- The pump weighs 40 pounds or more.
- The combined length of the P.T.O. and pump is 18 inches or more from the P.T.O. centerline to the end of the pump.

Also remember to pack the female pilot of the P.T.O. pump flange with grease before installing the pump on the P.T.O.

Suffix GQ

S.A.E. Class “B” 2 or 4 Bolt
For 7/8" - 13 Tooth Splined Shaft,
(*Greaseable)

Available for the following P.T.O.s:
221, 260, 435, 441, 442, 447,
489, 660, 2442

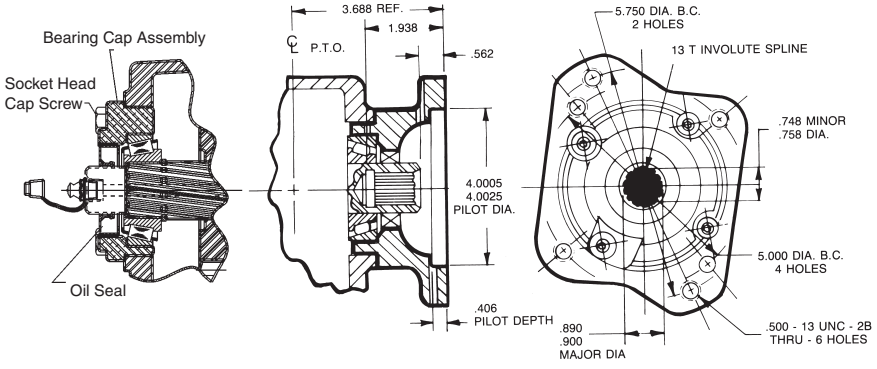

Suffix GR

For Chelsea Pumps
For 7/8" - 13 Tooth Splined Shaft,
(*Greaseable)

Available for the following P.T.O.s:
221, 260, 290, 441, 442, 447, 489,
660, 2442

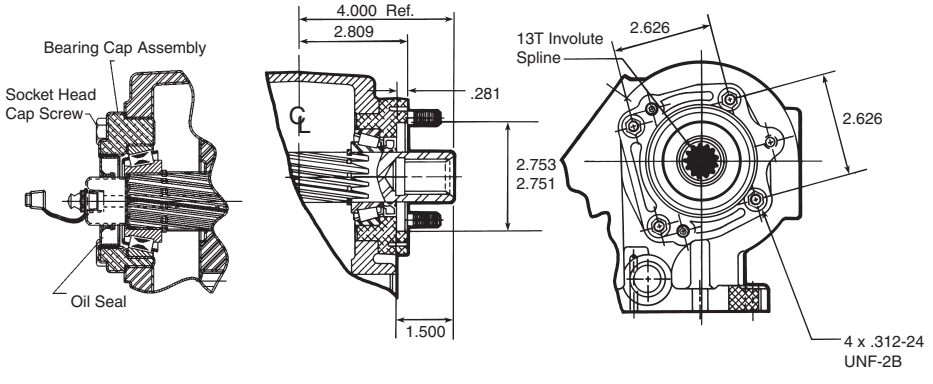

Suffix GY

DIN 5462 Pump Mounting
For B8 x 32 x 36 x 36 DIN 5462
Splined Shaft,
(*Greaseable)

Available for the following P.T.O.s:
221, 260, 441, 442, 447, 660, 2442

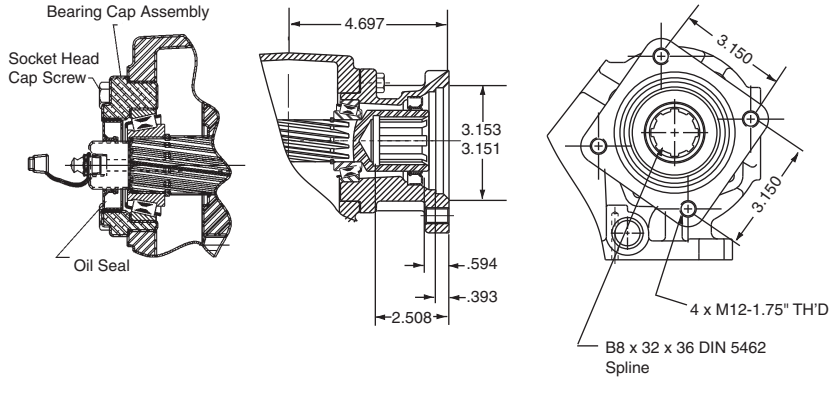

* Recommended Grease: Texaco Coupling Grease, Code 1912 or Equivalent

NOTE: PUMP INSTALLATION PRECAUTIONS
Use a bracket to support the pump to the transmission if:

- The pump weighs 40 pounds or more.
- The combined length of the P.T.O. and pump is 18 inches or more from the P.T.O. centerline to the end of the pump.

Also remember to pack the female pilot of the P.T.O. pump flange with grease before installing the pump on the P.T.O.

Parker Hannifin Corporation
Chelsea Products Division
Olive Branch, MS 38654 USA

Suffix GZ

Non Standard 4 Bolt
For 1-1/4" - 14 Tooth Splined Shaft,
(*Greaseable)

Available for the following P.T.O.s:
221, 260, 290, 441, 442, 447, 489,
660, 2442

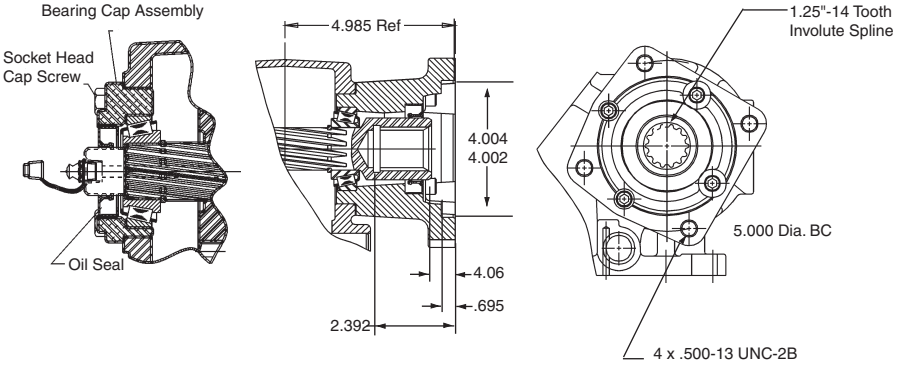

Suffix RA

S.A.E. Class "B" 2 Bolt Rotatable
For 7/8" - 13 Tooth Splined Shaft

Available for the following P.T.O.s:
221, 260, 290, 435, 441, 442,
447, 489, 2442

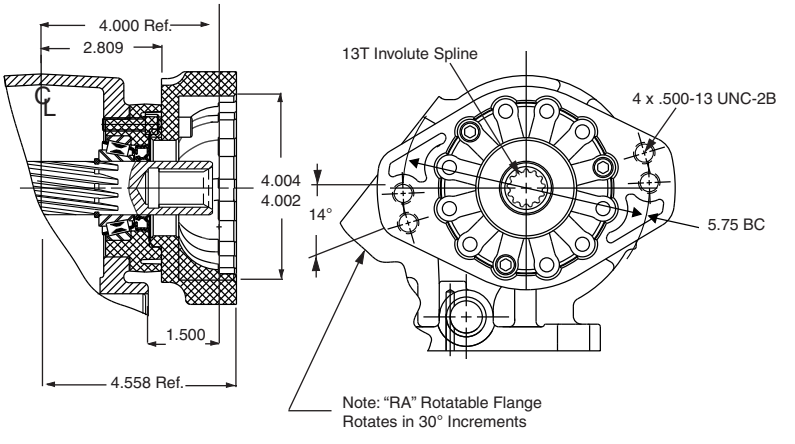

Suffix RB

S.A.E. Class "B" 4 Bolt Rotatable
For 7/8" - 13 Tooth Splined Shaft

Available for the following P.T.O.s:
221, 260, 290, 435, 441, 442, 447,
489, 2442

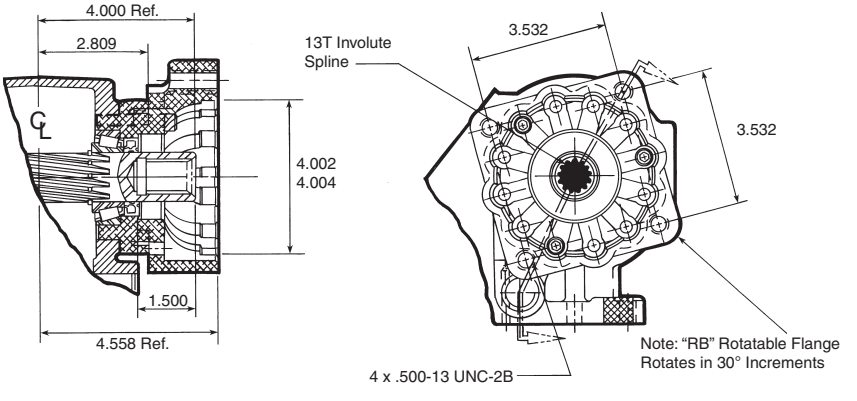

* Recommended Grease: Texaco Coupling Grease, Code 1912 or Equivalent

NOTE: PUMP INSTALLATION PRECAUTIONS
Use a bracket to support the pump to the transmission if:

- The pump weighs 40 pounds or more.
- The combined length of the P.T.O. and pump is 18 inches or more from the P.T.O. centerline to the end of the pump.

Also remember to pack the female pilot of the P.T.O. pump flange with grease before installing the pump on the P.T.O.

Suffix RC

S.A.E. Class “A” 2 Bolt Rotatable
For 5/8" - 9 Tooth Splined Shaft

Available for the following P.T.O.s:
221, 260, 441, 442, 447, 2442

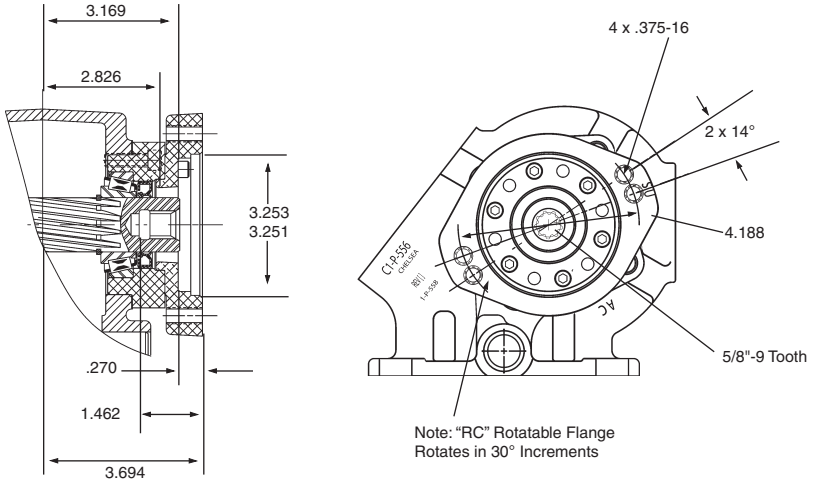

Suffix RD

S.A.E. Class “A” 2 Bolt Rotatable
For 7/8" - 13 Tooth Splined Shaft

Available for the following P.T.O.s:
221, 260, 441, 442, 447, 2442

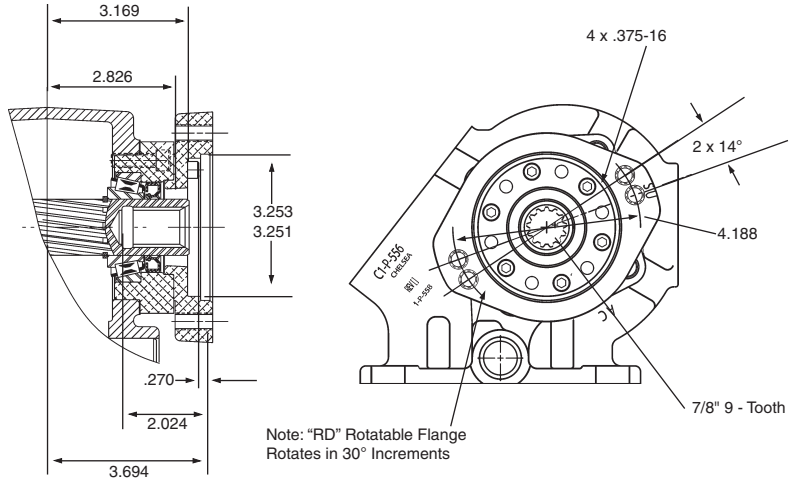

Suffix RE

S.A.E. Class “B” 4 Bolt Rotatable
For 1.00" - 15 Tooth Splined Shaft

Available for the following P.T.O.s:
267, 290, 441, 442, 447, 489, 660, 2442

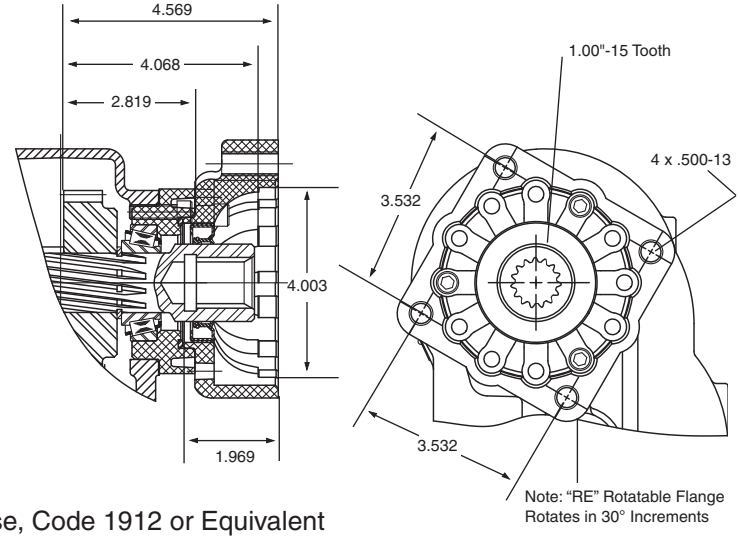

* Recommended Grease: Texaco Coupling Grease, Code 1912 or Equivalent

NOTE: PUMP INSTALLATION PRECAUTIONS
Use a bracket to support the pump to the transmission if:

- The pump weighs 40 pounds or more.
- The combined length of the P.T.O. and pump is 18 inches or more from the P.T.O. centerline to the end of the pump.

Also remember to pack the female pilot of the P.T.O. pump flange with grease before installing the pump on the P.T.O.

Suffix RF

S.A.E. Class “BB” 2 Bolt Rotatable
For 1" - 15 Tooth Splined Shaft

Available for the following P.T.O.s:
221, 260, 441, 442, 447, 489, 2442

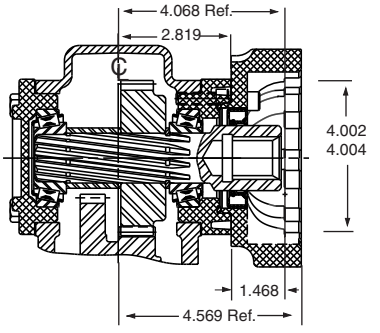

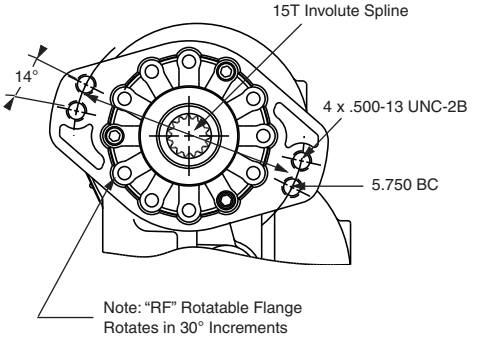

Suffix RY

DIN 5462 Pump Mounting

Available for the following P.T.O.s:
260, 442, 447, 660

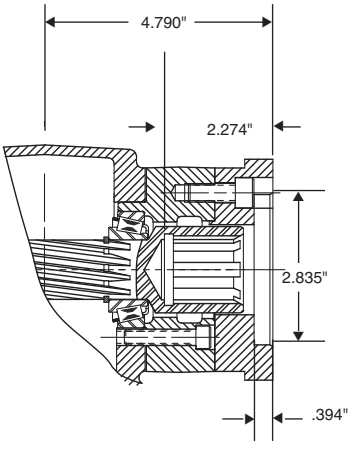

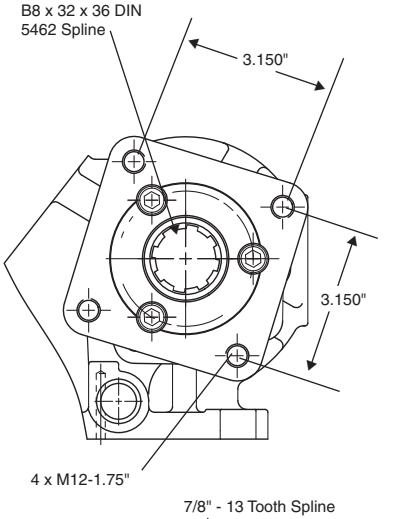

Suffix SQ

S.A.E. Class “B” 4 Bolt
For 7/8" - 13 Tooth Splined Shaft

Available for the following P.T.O.s:
221, 260, 435, 441, 442, 447,
489, 2442

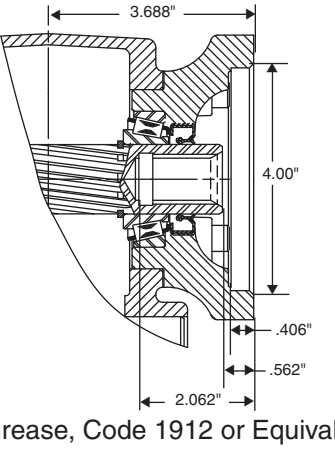

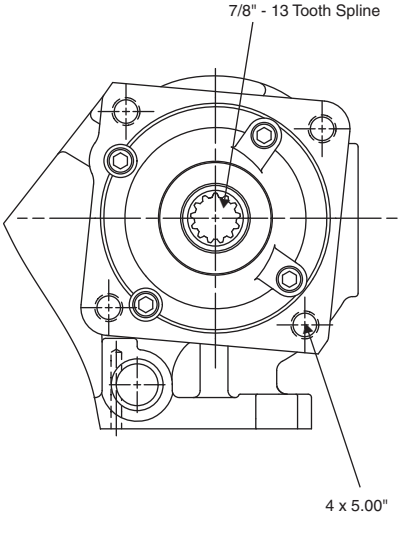

* Recommended Grease: Texaco Coupling Grease, Code 1912 or Equivalent

NOTE: PUMP INSTALLATION PRECAUTIONS
Use a bracket to support the pump to the transmission if:

- The pump weighs 40 pounds or more.
- The combined length of the P.T.O. and pump is 18 inches or more from the P.T.O. centerline to the end of the pump.

Also remember to pack the female pilot of the P.T.O. pump flange with grease before installing the pump on the P.T.O.

Suffix XE

S.A.E. Class “A” 2 or 4 Bolt
For 5/8" - 9 Tooth Splined Shaft

Available for the following P.T.O.s:
221, 260, 442, 447, 489, 2442

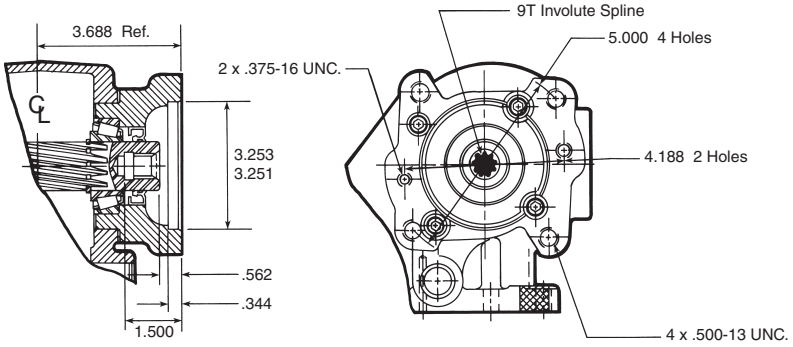

Suffix XG

S.A.E. Class “A” 2 Bolt
For 3/4" Round Shaft

Available for the following P.T.O.s:
221, 260, 290, 442, 447, 489, 2442

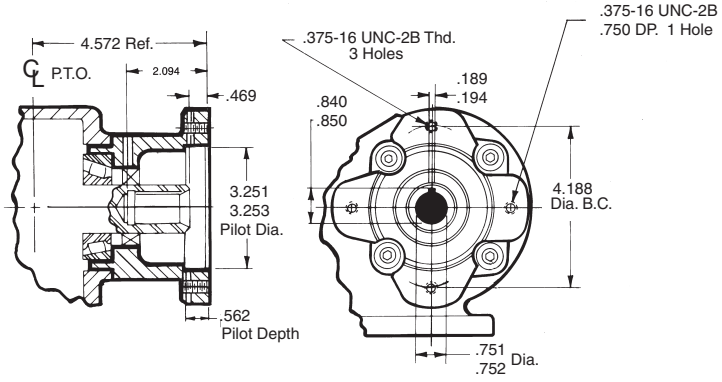

Suffix XJ

S.A.E. Class “A” 2 Bolt
For 3/4" Round Shaft

Available for the following P.T.O.s:
221, 260, 290, 441, 442, 447,
489, 2442

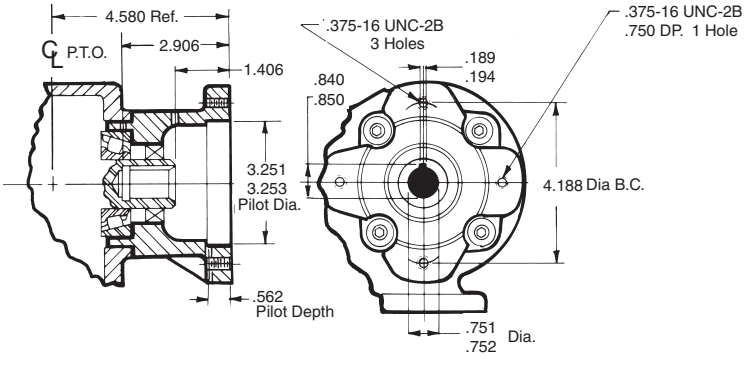

* Recommended Grease: Texaco Coupling Grease, Code 1912 or Equivalent

NOTE: PUMP INSTALLATION PRECAUTIONS
Use a bracket to support the pump to the transmission if:

- The pump weighs 40 pounds or more.
- The combined length of the P.T.O. and pump is 18 inches or more from the P.T.O. centerline to the end of the pump.

Also remember to pack the female pilot of the P.T.O. pump flange with grease before installing the pump on the P.T.O.

Suffix XK

S.A.E. Class “B” 2 or 4 Bolt
For 7/8" - 13 Tooth Splined Shaft

Available for the following P.T.O.s:
221, 260, 290, 441, 442, 447,
489, 2442

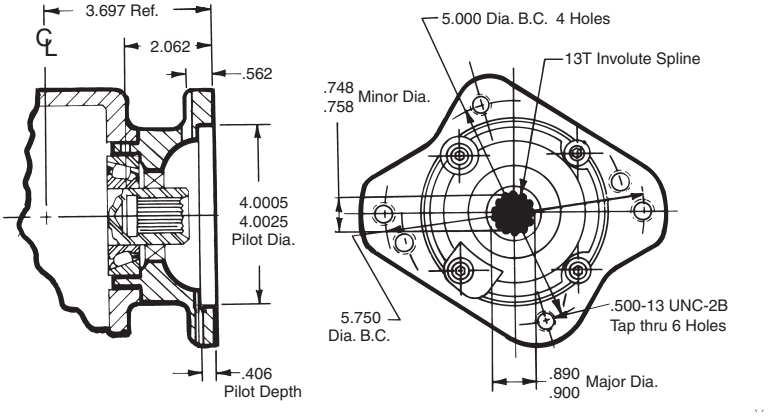

Suffix XQ

S.A.E. Class “B” 2 or 4 Bolt
For 7/8" - 13 Tooth Splined Shaft

Available for the following P.T.O.s:
221, 260, 435, 441, 442, 447,
489, 2442

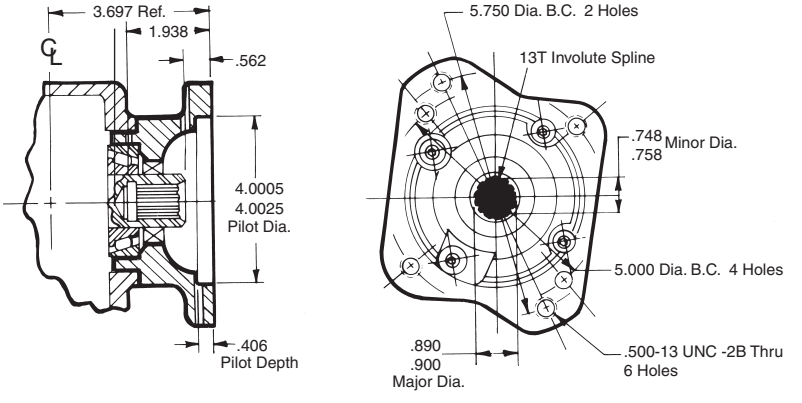

Suffix XR

For Chelsea Pumps
For 7/8" - 13 Tooth Splined Shaft

Available for the following P.T.O.s:
221, 260, 290, 435, 441, 442, 447,
489, 2442

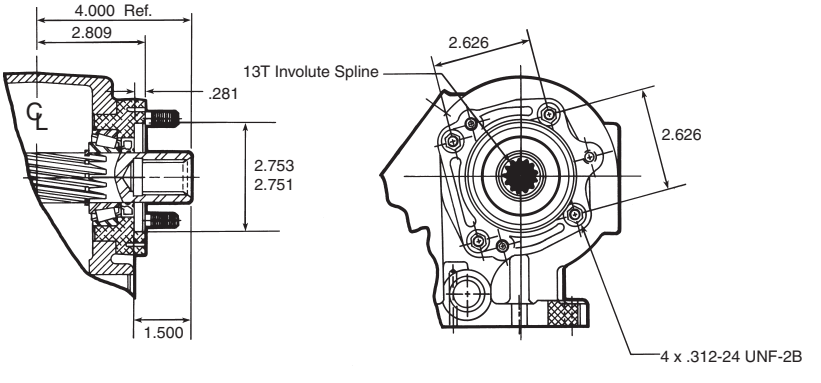

* Recommended Grease: Texaco Coupling Grease, Code 1912 or Equivalent

NOTE: PUMP INSTALLATION PRECAUTIONS
Use a bracket to support the pump to the transmission if:

- The pump weighs 40 pounds or more.
- The combined length of the P.T.O. and pump is 18 inches or more from the P.T.O. centerline to the end of the pump.

Also remember to pack the female pilot of the P.T.O. pump flange with grease before installing the pump on the P.T.O.

Suffix XY
DIN 5462 Pump Mounting
For B8 x 32 x 36 x 36 DIN 5462
Splined Shaft

Available for the following P.T.O.s:
221, 260, 441, 442, 447, 660, 2442

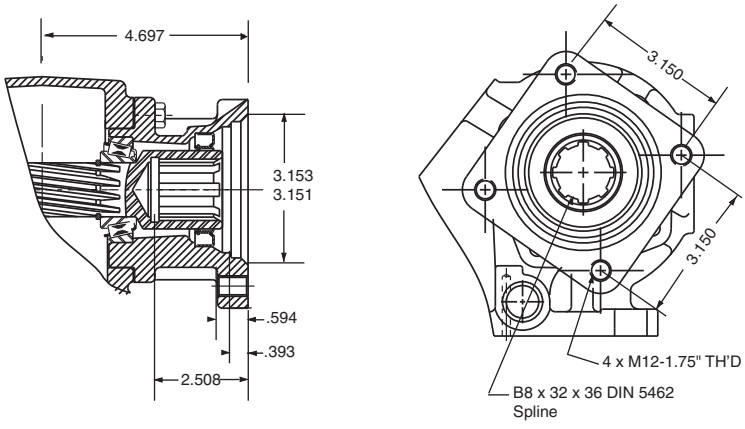

21-P-525
(XR to XK Conversion Flange)

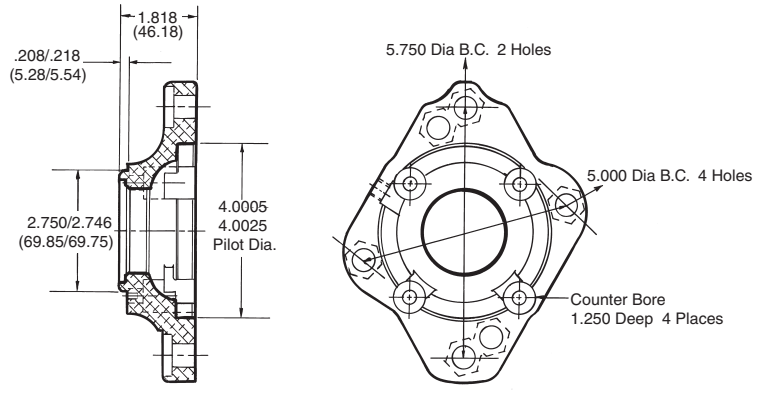

* Recommended Grease: Texaco Coupling Grease, Code 1912 or Equivalent

NOTE: PUMP INSTALLATION PRECAUTIONS
Use a bracket to support the pump to the transmission if:
- The pump weighs 40 pounds or more.
- The combined length of the P.T.O. and pump is 18 inches or more from the P.T.O. centerline to the end of the pump.

Also remember to pack the female pilot of the P.T.O. pump flange with grease before installing the pump on the P.T.O.

P.T.O. Shift Mechanisms Field Conversion Kits

Series/ Application	Assembly Arrangement	Wire To Air	Lever To Air	Wire to Elec. over Air 12 Volt	Lever to Elec. Over Air 12 Volt
100	3 & 4	328390-86X	328390-85X		
221	3,4,5 & 6	328390-88X	328390-89X	328390-109X	328390-111X
290	3,4,5 & 6	328390-123X			
442	3,4,5 & 6	328390-117X	328390-117X	328390-119X	
447	3,4,5 & 6	328390-125X	328390-125X	328390-127X	
660	3,4,5 & 6	328390-117X	328390-117X	328390-119X	

Cover Assemblies

Series/ Application	Assembly Arrangement	Wire Control	Air Control
100	3	328932-1X	328851X
100	4	328932-2X	328851X
100 ISUZU		329009X	
221	3 & 6	328805-1X	328723X
221	4 & 5	328805-2X	328723X
290	3,4,5 & 6		329363X
442 Q, W & X	3 & 6	329119-1X	
442 Q, W & X	4 & 5	329119-2X	
442 F,L,R,S & U	3 & 6	329121-1X	
442 F,L,R,S & U	4 & 5	329121-2X	
442 A, B & C	3 & 6	329271-1X	
442 A, B & C	4 & 5	329271-2X	
442 (All Ratios)	All		329361X
447 Q & W	3 & 6	329151-1X	
447 Q & W	4 & 5	329151-2X	
447 S, U & R	3 & 6	329152-1X	
447 S, U & R	4 & 5	329152-2X	
447 (All Ratios)	All		329363X
660 Q & W	3 & 6	329119-1X	
660 Q & W	4 & 5	329119-2X	
660 F, S & U	3 & 6	329121-1X	
660 F, S & U	4 & 5	329121-2X	
660 (All Ratios)	All		329361X

Installation Kits

Series/ Application	Assembly Arrangement	Wire Control	Air Control	Electric Over Air		Air Shift w/ Modified Combo Valve	Air Shift w/ Combo Valve
				12 Volt	24 Volt		
100	3 & 4	328380X	328388-37X	328388-47X	328388-48X		328388-65X
221	3,4,5 & 6	328380X	328388-37X	328388-47X	328388-48X		328388-65X
290	3,4,5 & 6		328388-37X	328388-47X	328388-48X		328388-65X
442	3,4,5 & 6	328380X	328388-37X	328388-47X	328388-48X	328388-72X	328388-65X
447	3,4,5 & 6	328380X	328388-37X	328388-47X	328388-48X	328388-72X	328388-65X
660	3,4,5 & 6	328380X	328388-37X	328388-47X	328388-48X	328388-72X	328388-65X

Filler Blocks

Filler blocks are required as called for on the P.T.O. application pages, where it is necessary to use a spacer to adapt the Power Take-Off to a particular transmission.

Two filler blocks may be used in combination with one or more gaskets between the filler block surfaces.

In computing the total thickness of the filler block and gasket combination, use a factor of .012" (compressed thickness of a .020" gasket 35-P-9-2 or 35-P-15-2) for every .020" gasket required in the installation.

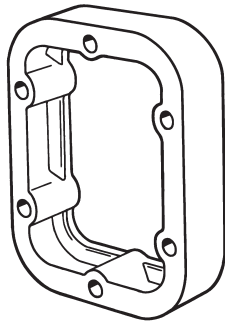

S.A.E. 6-Bolt Filler Blocks

Part Number	"A" Thickness	Material	Part Number	"A" Thickness	Material
7-A-032	.032"	Fiber	7-A-550	.550"	Cast Iron
7-A-062	.062"	Fiber	7-A-562	.562"	Cast Iron
			7-A-700	.700"	Cast Iron
7-A-093	.093"	Steel	7-A-800	.800"	Cast Iron
7-A-125	.125"	Steel	7-A-1000	1.000"	Cast Iron
7-A-140	.140"	Steel	7-A-1180	1.180"	Cast Iron
7-A-165	.165"	Steel	7-A-1250	1.250"	Cast Iron
7-A-187	.187"	Steel	7-A-1468	1.468"	Cast Iron
			7-A-1520	1.520"	Cast Iron
7-A-200	.200"	Cast Iron	7-A-1640	1.640"	Cast Iron
7-A-240	.240"	Cast Iron	7-A-1875	1.875"	Cast Iron
7-A-270	.270"	Cast Iron	7-A-2000	2.000"	Cast Iron
7-A-300	.300"	Cast Iron			
7-A-350	.350"	Cast Iron			
7-A-400	.400"	Cast Iron			
7-A-450	.450"	Cast Iron			
7-A-500	.500"	Cast Iron			

8-Bolt Mechanical

P.T.O. Options Chart – 8-Bolt P.T.O.s

P.T.O. Series		489	680	812	823	880
Lubrication						
X	Standard	x	x	x	x	x
P	Pressure	x	x		x	x
Shifting						
A	Air	x	x	x	x	x
C	Heavy Duty Bracket Less Cable	x	x			
D	Air Shift, Disengaged, Ship Loose					x
H	No Shifter	x	x			x
M	Constant Mesh	x	x		x	x
P	Electric/Air 12V	x	x	x		
Q	Electric/Air 24V	x	x	x		
S	P.T.O. & Combo Valve	x	x			
T	P.T.O. & Pump Valve Less Kick Out & Neutral Spring Return	x	x			
V	Air Shift Less Installation Kit	x	x	x	x	x
W	Wire	x	x	x		
X	Less Cable & Knob	x	x			
Y	Lever Control			x	x	x
Output						
AA	Special Pump for Europe	x	x			
AB	DIN 120 Flange				x	x
AC	DIN 100 Flange				x	x
AF	S.A.E. “B” 2 or 4 Bolt Flange, “BB” Shaft (1.00" 15 -Tooth)	x	x			x
AK	S.A.E. “B” 2 Bolt Flange, “B” Shaft (7/8" 13 - Tooth)	x	x	x		
AZ	Non Standard Flange, “C” Shaft (1-1/4" 14 - Tooth)	x	x			
FF	S.A.E. “B” 2 or 4 Bolt Flange, “B” Shaft (.875" - 1/4" w/ 1/4" Key)					
GA	Rotatable “B” 2 Bolt Flange, “B” Shaft (7/8" 13 - Tooth) (Greaseable)	x	x			
GB	Rotatable “B” 4 Bolt Flange, “B” Shaft (7/8" 13 - Tooth) (Greaseable)	x	x			
GE	Rotatable S.A.E. “A” 2 or 4 Bolt Flange, “A” Shaft (5/8" 9 - Tooth) (Greaseable)	x	x			
GF	S.A.E. “B” 2 or 4 Bolt Flange, “BB” Shaft (1.00" 15 - Tooth) (Greaseable)	x	x			
GH	Rotatable “B” 2 Bolt Flange, “BB” Shaft (1.00" 15 - Tooth) (Greaseable)	x	x			
GJ	Rotatable “B” 4 Bolt Flange, “BB” Shaft (1.00" 15 - Tooth) (Greaseable)	x	x			
GK	S.A.E. “B” 2 or 4 Bolt Flange, “B” Shaft (7/8" 13 - Tooth) (Greaseable)	x	x			
GP	S.A.E. “A” 2 Bolt Flange, ”B” Shaft (7/8" 13 - Tooth) (Greaseable)	x	x			
GQ*	S.A.E. “B” 2 or 4 Bolt Flange, “B” Shaft (7/8" 13 - Tooth) (Greaseable)	x	x			
GR	Chelsea Special Pump Mount, “B” Shaft (7/8" 13 - Tooth) (Greaseable)	x	x			
GS	S.A.E. “C” 2 or 4 Bolt Flange, “C” Shaft (1-1/4" 14 - Tooth) (Greasable)				x	x
GY	DIN 5462 Pump Mounting (Greaseable)	x	x			
GZ	Non Standard Flange, “C” Shaft (1-1/4" 14 - Tooth) (Greaseable)	x	x			
LA	S.A.E. “B” 2 Bolt Flange w/Lube Pump (Same as AK)	x	x			
LB	S.A.E. “A” 2 Bolt Flange w/Lube Pump (Same as XP)	x	x			
LC	S.A.E. “A” 2 Bolt Flange w/Lube Pump (Same as XQ)	x	x			
LD	1-1/4" Round Shaft w/Lube Pump (Same as XD)	x	x			
LF	S.A.E. “B” 2 or 4 Bolt Flange w/Lube Pump (Same as XK)	x	x			x
LG	1-1/2" 10 Spline w/1410 & Lube Pump (Same as XV)				x	x
LH	S.A.E. “C” 2 or 4 Bolt Flange w/Lube Pump (Same as XS)				x	x
LJ	S.A.E. “C” 2 Bolt Flange w/ Lube Pump (Same as XU)				x	
PA	Special Rotatable S.A.E. “B” 2 Bolt Flange for Parker P Series Sculptured Pump, “B” Shaft (7/8" 13 - Tooth)	x				
PF	Special Rotatable S.A.E. “B” 2 Bolt Flange for Parker P Series Sculptured Pump, “BB” Shaft (1.00" 15 - Tooth)	x				
RA	Rotatable “B” 2 Bolt Flange, “B” Shaft (7/8" 13 - Tooth)	x	x	x		
RB	Rotatable “B” 4 Bolt Flange, “B” Shaft (7/8" 13 - Tooth)	x	x	x		
RC	Rotatable “A” 2 Bolt Flange, “A” Shaft (5/8" 9 - Tooth)	x	x			
RD	Rotatable “A” 2 Bolt Flange, “B” Shaft (7/8" 13 - Tooth)	x	x			
RE	Rotatable “B” 4 Bolt Flange, “BB” Shaft (1.00" 15 - Tooth)	x	x			

* XQ/GQ same as XK/GK except flange rotated 90°
** Order companion (3-1-604) separately
NOTE: Always Check Price Book for Current Options

Continued on next page

Parker Hannifin Corporation
Chelsea Products Division
Olive Branch, MS 38654 USA

8-Bolt Mechanical (continued)

P.T.O. Options Chart – 8-Bolt P.T.O.s

P.T.O. Series		489	680	812	823	880
RF	Rotatable “B” 2 Bolt Flange, “BB” Shaft (1.00" 15 - Tooth)	x	x			
RY	Rotatable DIN 5462 Pump Flange	x	x			
SK	Double Pump S.A.E. “B” 2 & 4 Bolt Flange, “B” Shaft (7/8" 13 - Tooth) & S.A.E. “C” 2 & 4 Bolt Flange, “C” Shaft (1-1/4" 14 - Tooth)					x
SS	Double Pump S.A.E. “C” 2 & 4 Bolt Flanges, “C” Shafts (1-1/4" 14 - Tooth)					x
XD	1-1/4" Round Shaft	x	x	x		
XE	S.A.E. “A” 2 or 4 Bolt Flange, “A” Shaft (5/8" 9 - Tooth)	x	x			
XG	Non Standard S.A.E. “B” 2 Bolt Flange, Non Standard Shaft (3/4" w/ 3/16" key)	x	x			
XJ	Non Standard S.A.E. “A” 2 Bolt Flange, Non Standard Shaft (3/4" w/ 3/16" key)	x	x			
XK	S.A.E. “B” 2 or 4 Bolt Flange, “B” Shaft (7/8" 13 - Tooth)	x	x			x
XQ*	S.A.E. “B” 2 or 4 Bolt Flange, “B” Shaft (7/8" 13 - Tooth)	x	x			
XR	1-1/2" 10 spline w/1410 Series Flange	x	x	x		
XS	S.A.E. “C” 2 or 4 Bolt Flange, “C” Shaft (1-1/4" 14 - Tooth)				x	x
XU	S.A.E. “C” 2 Bolt Flange, “C” Shaft (1-1/4" 14 - Tooth)				x	
XV	1-1/2" 10 Spline w/1410 Series Flange		x		x	x
XW	S.A.E. “C” 2 or 4 Bolt Wet Spline				x	
XX**	1-1/4" Tapered Shaft for Companion Flange 3-1-604	x	x	x		
XY	DIN 5462 Pump Mounting	x	x	x	x	x
YY	Double Pump DIN 80				x	x

* XQ/GQ same as XK/GK except flange rotated 90°
** Order companion (3-1-604) separately
NOTE: Always Check Price Book for Current Options

Parker Hannifin Corporation
Chelsea Products Division
Olive Branch, MS 38654 USA

For converting 8-Bolt Chelsea P.T.O.s from a driveshaft output to a pump flange output, use the following kits.

489 Series

Pump Suffix	Kit No. Suffix	Kit Number	Flange Type	Shaft Type
AF	XD to AF	328591-30X	S.A.E. “BB” 2 or 4 Bolt	1.00" - 15 Tooth Splined
AK	XD to AK	328591-28X	S.A.E. “B” 2 Bolt	7/8" - 13 Tooth Splined
AZ	XD to AZ	328591-70X	S.A.E. “B” 4 Bolt	1-1/4" - 14 Tooth Splined
GA	XD to GA	328591-72X	S.A.E. “B” 2 Bolt	*7/8" - 13 Tooth Internal Spline
	XR to GA	328591-73X		
	RA to GA	328591-106X		
GB	XD to GB	328591-74X	S.A.E. “B” 4 Bolt	*7/8" - 13 Tooth Internal Spline
	XR to GB	328591-75X		
	RB to GB	328591-107X		
GF	XD to GF	328591-71X	S.A.E. “BB” 2 or 4 Bolt	*1.00" - 15 Tooth Internal Spline
	AF to GF	328591-108X		
GH	XD to GH	328591-116X	S.A.E. “BB” 2 Bolt Rotatable	*1.00" - 15 Tooth Internal Spline
	RF to GH	328591-114X		
GJ	XD to GJ	328591-138X	S.A.E. “B” 4 Bolt Rotatable	*1.00" - 15 Tooth Splined
	RE to GJ	328591-114X		
GK	XD to GK	328591-89X	S.A.E. “B” 2 or 4 Bolt	*7/8" - 13 Tooth Internal Spline
	XK to GK	328591-86X		
GP	XD to GP	358591-90X	S.A.E. “A” 2 Bolt	*7/8" - 13 Tooth Internal Spline
	XP to GP	328591-86X		
GQ	XD to GQ	328591-91X	S.A.E. “B” 2 or 4 Bolt	*7/8" - 13 Tooth Internal Spline
	XQ to GQ	328591-86X		
GR	XD to GR	328591-76X	CHELSEA SPECIAL 4 Bolt	*7/8" - 13 Tooth Internal Spline
GY	XD to GY	328591-92X	DIN 5462 Pump Mounting	*DIN 5462 Spline
	XY to GY	328591-87X		
GZ	XD to GZ	328591-93X	S.A.E. “B” 4 Bolt	*1-1/4" - 14 Tooth Splined
	AZ to GZ	328591-88X		
LA (AK w/Lube Pump)	XD to LA	328591-44X	S.A.E. “B” 2 Bolt	7/8" - 13 Tooth Splined
LB (XP w/Lube Pump)	XD to LB	328591-45X	S.A.E. “A” 2 Bolt	7/8" - 13 Tooth Splined
LC (XQ w/Lube Pump)	XD to LC	328591-46X	S.A.E. “B” 2 or 4 Bolt	7/8" - 13 Tooth Splined
LF (XK w/Lube Pump)	XD to LF	328591-48X	S.A.E. “B” 2 or 4 Bolt	7/8" - 13 Tooth Splined
RA	XD to RA	328591-55X	S.A.E. “B” 2 Bolt Rotatable	7/8" - 13 Tooth Internal Spline
	XR to RA	328591-53X	S.A.E. “B” 2 Bolt Rotatable	7/8" - 13 Tooth Internal Spline
RB	XD to RB	328591-56X	S.A.E. “B” 4 Bolt Rotatable	7/8" - 13 Tooth Internal Spline
	XR to RB	328591-54X	S.A.E. “B” 4 Bolt Rotatable	7/8" - 13 Tooth Internal Spline
RC	XD to RC	328591-112X	S.A.E. “A” 2 Bolt Rotatable	5/8" - 9 Tooth Splined
RD	XD to RD	328591-113X	S.A.E. “A” 2 Bolt Rotatable	7/8" - 13 Tooth Splined
RE	XD to RE	328591-134X	S.A.E. “B” 4 Bolt Rotatable	1.00" - 15 Tooth Splined
RF	XD to RF	328591-78X	S.A.E. “BB” 2 Bolt Rotatable	1.00" - 15 Tooth Splined
RY	XD to RY	328591-131X	DIN 5462 Pump Mounting Rotatable	DIN 5462 Spline
XE	XD to XE	328591-27X	S.A.E. “A” 2 or 4 Bolt	5/8" - 9 Tooth Splined
XG	XD to XG	328591-10X	Non-Standard 2 Bolt	3/4" Round
XJ	XD to XJ	328591-11X	Non-Standard 2 Bolt	3/4" Round
XK	XD to XK	328591-16X	S.A.E. “B” 2 or 4 Bolt	7/8" - 13 Tooth Splined
XQ	XD to XQ	328591-17X	S.A.E. “B” 2 or 4 Bolt	7/8" - 13 Tooth Splined
XR	XD to XR	328591-52X	Chelsea Special	7/8" - 13 Tooth Splined
XV	XD to XV	328591-130X	1410 Companion Flange	1-1/4" Round
XX	XD to XX	328591-122X	1410 Companion Flange	1-1/4" S.A.E. Tapper
XY	XD to XY	328591-121X	DIN 5462 Pump Mounting	DIN 5462 Spline

NOTE: Use 329097-1X to convert P.T.O.s with AK, XP, XQ, XN, or XK output to the self-lube pump option.

*Grease fitting on end of shaft

680 Series

Pump Suffix	Kit No. Suffix	Kit Number	Flange Type	Shaft Type
AF	XD to AF	328591-30X	S.A.E. “BB” 2 or 4 Bolt	1.00" - 15 Tooth Internal Spline
AK	XD to AK	328591-28X	S.A.E. “B” 2 Bolt	7/8" - 13 Tooth Internal Spline
AZ	XD to AZ	328591-70X	Non Standard 4 Bolt	1- 1/4" - 14 Tooth Internal Spline
GA	XD to GA RA to GA	328591-124X 328591-109X	S.A.E. “B” 2 Bolt	*7/8" - 13 Tooth Internal Spline
GB	XD to GB RB to GB	328591-125X 328591-110X	S.A.E. “B” 4 Bolt	*7/8" - 13 Tooth Internal Spline
GF	XD to GF AF to GF	328591-123X 328591-111X	S.A.E. “BB” 2 or 4 Bolt	*1.00" - 15 Tooth Internal Spline
GH	XD to GH RF to GH	328591-117X 328591-115X	S.A.E. “BB” 2 Bolt Rotatable	*1.00" - 15 Tooth Internal Spline
GJ	XD to GJ RE to GJ	328591-139X 328591-115X	S.A.E. “B” 4 Bolt Rotatable	*1.00" - 15 Tooth Splined
GK	XD to GK XK to GK	328591-99X 328591-96X	S.A.E. “B” 2 or 4 Bolt	*7/8" - 13 Tooth Internal Spline
GP	XD to GP XP to GP	328591-100X 328591-96X	S.A.E. “A” 2 Bolt	*7/8" - 13 Tooth Internal Spline
GQ	XD to GQ XQ to GQ	328591-101X 328591-96X	S.A.E. “B” 2 or 4 Bolt	*7/8" - 13 Tooth Internal Spline
GR	XD to GR	328591-126X	CHELSEA SPECIAL 4 Bolt	*7/8" - 13 Tooth Internal Spline
GY	XD to GY XY to GY	328591-102X 328591-97X	DIN 5462	B8 x 32 x 36 DIN 5462 Spline
GZ	XD to GZ AZ to GZ	328591-103X 328591-98X	Non Standard 4 Bolt	*1-1/4" - 14 Tooth Internal Spline
LA (AK w/Lube Pump)	XD to LA	328591-44X	S.A.E. “B” 2 Bolt	7/8" - 13 Tooth Splined
LB (XP w/Lube Pump)	XD to LB	328591-45X	S.A.E. “A” 2 Bolt	7/8" - 13 Tooth Splined
LC (XQ w/Lube Pump)	XD to LC	328591-46X	S.A.E. “B” 2 or 4 Bolt	7/8" - 13 Tooth Splined
LF (XK w/Lube Pump)	XD to LF	328591-48X	S.A.E. “B” 2 or 4 Bolt	7/8" - 13 Tooth Splined
RA	XD to RA XR to RA	328591-55X 328591-53X	S.A.E. “B” 2 Bolt Rotatable	7/8" - 13 Tooth Internal Spline
RB	XD to RB XR to RB	328591-56X 328591-54X	S.A.E. “B” 4 Bolt Rotatable	7/8" - 13 Tooth Internal Spline
RC	XD to RC	328591-112X	S.A.E. “A” 2 Bolt Rotatable	5/8" - 9 Tooth Internal Spline
RD	XD to RD	328591-113X	S.A.E. “A” 2 Bolt Rotatable	7/8" - 13 Tooth Internal Spline
RE	XD to RE	328591-134X	S.A.E. “B” 4 Bolt Rotatable	1.00" - 15 Tooth Splined
RF	XD to RF	328591-78X	S.A.E. “BB” 2 Bolt Rotatable	1.00" - 15 Tooth Internal Spline
RY	XD to RY	328591-131X	DIN 5462 Pump Mounting Rotatable	DIN 5462 Spline
XE	XD to XE	328591-27X	S.A.E. “A” 2 or 4 Bolt	5/8" - 9 Tooth Internal Spline
XG	XD to XG	328591-10X	Non-Standard 2 Bolt	3/4" Round
XJ	XD to XJ	328591-11X	Non-Standard 2 Bolt	3/4" Round
XK	XD to XK	328591-16X	S.A.E. “B” 2 or 4 Bolt	7/8" - 13 Tooth Internal Spline
XQ	XD to XQ	328591-26X	S.A.E. “A” 2 Bolt	3/4" Round
XR	XD to XR	328591-23X	S.A.E. “A” 2 Bolt	7/8" - 13 Tooth Internal Spline
XV	XD to XV	328591-17X	S.A.E. “B” 2 or 4 Bolt	7/8" - 13 Tooth Internal Spline
XX	XD to XX	328591-52X	CHELSEA SPECIAL 4 Bolt	7/8" - 13 Tooth Internal Spline
XY	XD to XY	328591-121X	DIN 5462	B8 x 32 x 36 DIN 5462 Spline

NOTE: Use 329097-1X to convert P.T.O.s with AK, XP, XQ, or XK output to the self-lube pump option.

*Grease fitting on end of shaft

812 Series

Pump Suffix	Kit No. Suffix	Kit Number	Flange Type	Shaft Type
RB	XD to RB	328591-66X	S.A.E. “B” 4 Bolt Rotatable	7/8" - 13 Tooth Internal Spline
	XR to RB	328591-54X		
XR	XD to XR	328591-64X	CHELSEA SPECIAL 4 Bolt	7/8" - 13 Tooth Internal Spline
RA	XR to RA	328591-53X		
	XD to RA	328591-65X	S.A.E. “B” 2 Bolt Rotatable	7/8" - 13 Tooth Internal Spline

823 Series

Pump Suffix	Kit No. Suffix	Kit Number	Flange Type	Shaft Type
GS	XS to GS	328591-136X	S.A.E. “C” 2 or 4 Bolt Flange	“C” Shaft (1-1/4" - 14 Tooth)
	XV to GS	328591-137X	S.A.E. “C” 2 or 4 Bolt Flange	“C” Shaft (1-1/4" - 14 Tooth)
L*	XV to LG	329111X	1410 Series Flange	
	XS to LH	329112X	S.A.E. “C” 2 or 4 Bolt Flange	“C” Shaft (1-1/4" - 14 Tooth)
	XS to LJ	329112X	S.A.E. “C” 2 or 4 Bolt Flange	“C” Shaft (1-1/4" - 14 Tooth)
	XU to LH	329112X	S.A.E. “C” 2 or 4 Bolt Flange	“C” Shaft (1-1/4" - 14 Tooth)
	XU to LJ	329112X	S.A.E. “C” 2 or 4 Bolt Flange	“C” Shaft (1-1/4" - 14 Tooth)

880 Series

Pump Suffix	Kit No. Suffix	Kit Number	Flange Type	Shaft Type
AB (Splash Lube)	XV to AB	328591-59X	DIN 120 Companion Flange	1-3/4" - 16 Tooth Spline
AB (Pressure Lube)	XV to AB	328591-60X	DIN 120 Companion Flange	1-3/4" - 16 Tooth Spline
AZ (Splash Lube)	XV to AZ	328591-127X	S.A.E. “B” 2 & 4 Bolt	1-1/4" - 14 Tooth Involute Internal Spline
AZ (Pressure Lube)	AV to AZ	328591-128X	S.A.E. “B” 2 & 4 Bolt	1-1/4" - 14 Tooth Involute Internal Spline
GS	XS to GS	328591-133X	S.A.E. “C” 2 & 4 Bolt	1-1/4" - 14 Tooth Spline
	XV to GS	328591-135X	S.A.E. “C” 2 & 4 Bolt	1-1/4" - 14 Tooth Spline
L*	XV to LG	329111-1X	1410 Companion Flange	1-1/2" - 10 Spline (Each End)
	XS to LH	329111-2X	S.A.E. “C” 2 & 4 Bolt	1-1/4" - 14 Tooth Spline
	XK to LF	329111-2X	S.A.E. “B” 2 & 4 Bolt	7/8" - 13 Tooth Involute Internal Spline
SS (Splash Lube)	XV to SS	328591-50X	S.A.E. “C” 2 & 4 Bolt	1-1/4" - 14 Tooth Involute Internal Spline
SS (Pressure Lube)	XV to SS	328591-51X	S.A.E. “C” 2 & 4 Bolt	1-1/4" - 14 Tooth Involute Internal Spline
YY (Splash Lube)	XV to YY	328591-61X	DIN 80mm (Both Ends)	1.748/1.540 - 16 Tooth & 1.424/1.267 - 10 Tooth Spline
SK (Pressure Lube)	XV to SK	328591-67X	S.A.E. “B” 2 & 4 Bolt & S.A.E. “C” 2 & 4 Bolt	7/8"-13 Involute & 1 -1/4" Involute - Internal Splines
XK (Splash Lube)	XV to XK	328591-32X	S.A.E. “B” 2 & 4 Bolt	7/8" - 13 Tooth Involute Internal Spline
XK (Pressure Lube)	XV to XK	328591-58X	S.A.E. “B” 2 & 4 Bolt	7/8" - 13 Tooth Involute Internal Spline
XS (Splash Lube)	XV to XS	328591-31X	S.A.E. “C” 2 & 4 Bolt	1-1/4" - 14 Tooth Spline
XS (Pressure Lube)	XV to XS	328591-49X	S.A.E. “C” 2 & 4 Bolt	1-1/4" - 14 Tooth Spline
XY	XV to XY	328591-34X	DIN 80mm	B8 x 32 x 36 DIN 5462 Spline

Parker Hannifin Corporation
Chelsea Products Division
Olive Branch, MS 38654 USA

Note: See pages 2.5 thru 2.15 for 489 and 680 Flange Dimensions.

Suffix AB
Din 120 Companion Flange
For 1-3/4" - 16 Tooth Splined Shaft

Available for the following P.T.O.s:
823

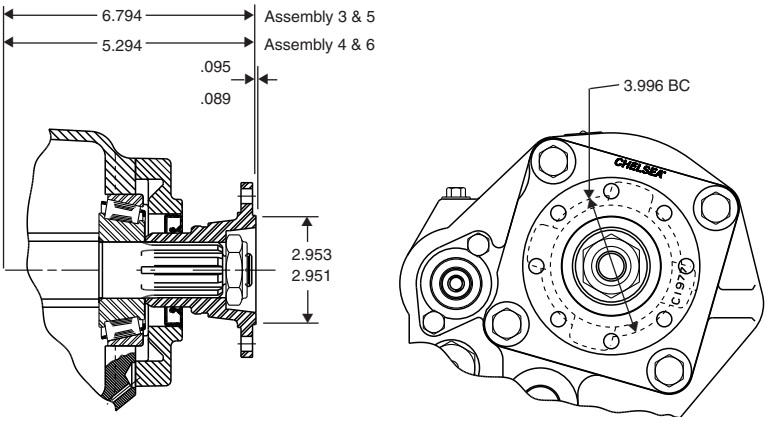

Suffix AB
Din 120 Companion Flange
For 1-3/4" - 16 Tooth Flange

Available for the following P.T.O.s:
880

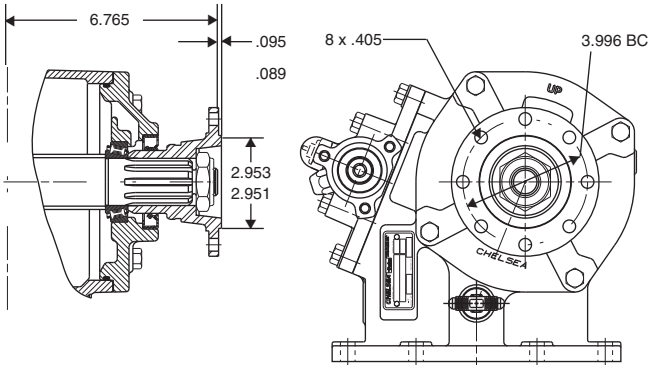

Suffix AC
DIN 100 Companion Flange
For 1-3/4" - 16 Tooth Splined Shaft

Available for the following P.T.O.s:
823

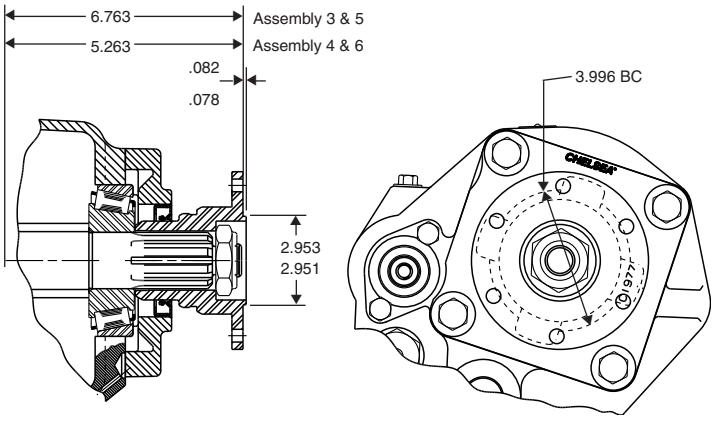

* Recommended Grease: Texaco Coupling Grease, Code 1912 or Equivalent

NOTE: PUMP INSTALLATION PRECAUTIONS
Use a bracket to support the pump to the transmission if:
- The pump weighs 40 pounds or more.
- The combined length of the P.T.O. and pump is 18 inches or more from the P.T.O. centerline to the end of the pump.

Also remember to pack the female pilot of the P.T.O. pump flange with grease before installing the pump on the P.T.O.

Suffix AK

S.A.E. Class “B” 2 Bolt
For 7/8" - 13 Tooth Splined Shaft

Available for the following P.T.O.s:
812

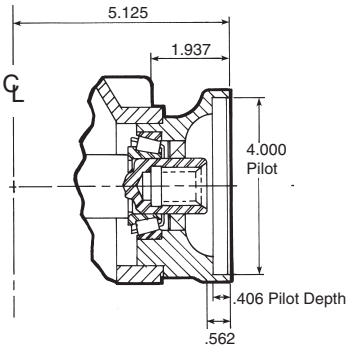

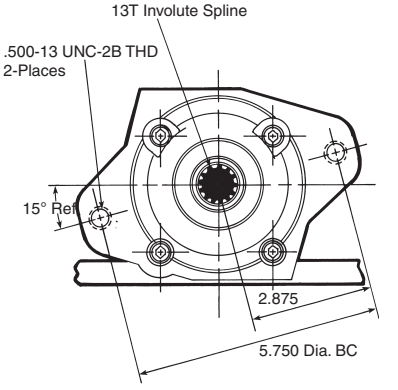

Suffix AZ

S.A.E. Class “B” 2 & 4 Bolt Flange
For 1-1/4" - 14 Tooth Spline Shaft

Available for the following P.T.O.s:
880

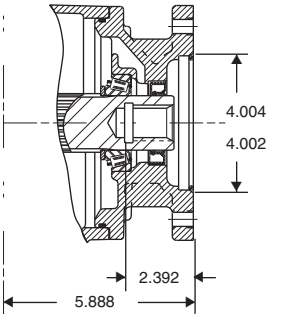

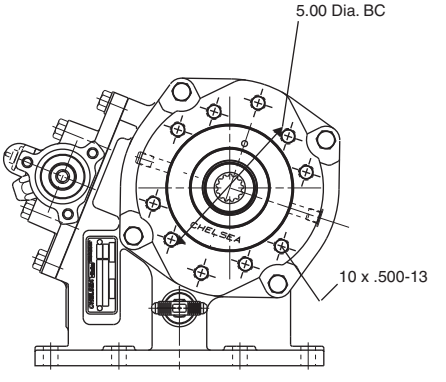

Suffix GS

S.A.E. “C” 2 or 4 Bolt
For 1-1/4" - 14 Tooth
Splined Shaft,
(*Greaseable)

Available for the
following P.T.O.s:
823

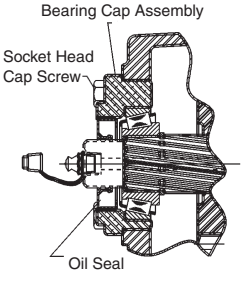

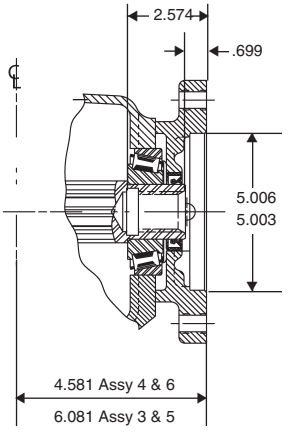

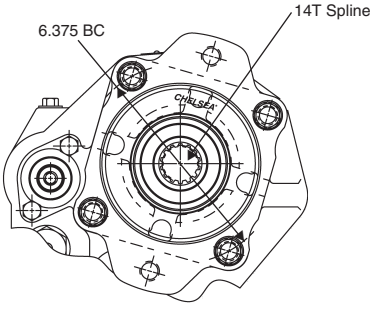

* Recommended Grease: Texaco Coupling Grease, Code 1912 or Equivalent

NOTE: PUMP INSTALLATION PRECAUTIONS
Use a bracket to support the pump to the transmission if:

- The pump weighs 40 pounds or more.
- The combined length of the P.T.O. and pump is 18 inches or more from the P.T.O. centerline to the end of the pump.

Also remember to pack the female pilot of the P.T.O. pump flange with grease before installing the pump on the P.T.O.

Parker Hannifin Corporation
Chelsea Products Division
Olive Branch, MS 38654 USA

Suffix GS

S.A.E. Class “C” 2 or 4 Bolt
For 1 1/4" - 14 Tooth Involute Splined Shaft,
(*Greaseable)

Available for the following P.T.O.s:
880

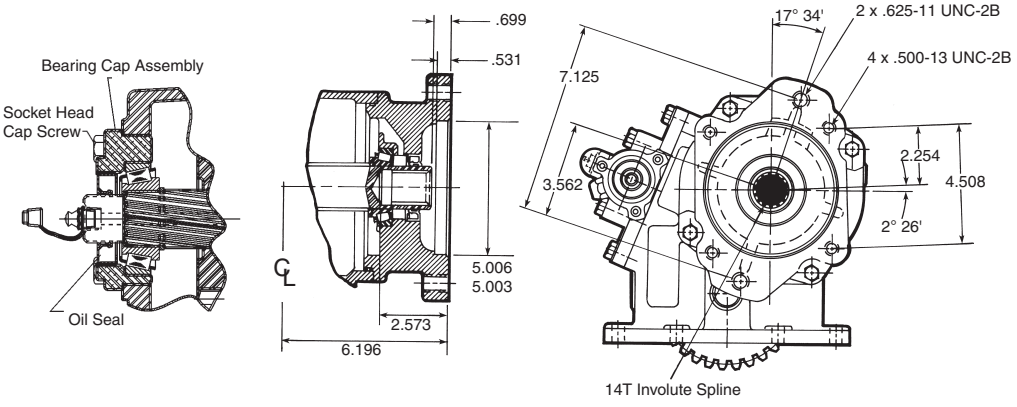

Suffix RB

S.A.E. Class “B” 4 Bolt Rotatable
For 7/8" - 13 Tooth Splined Shaft

Available for the following P.T.O.s:
812

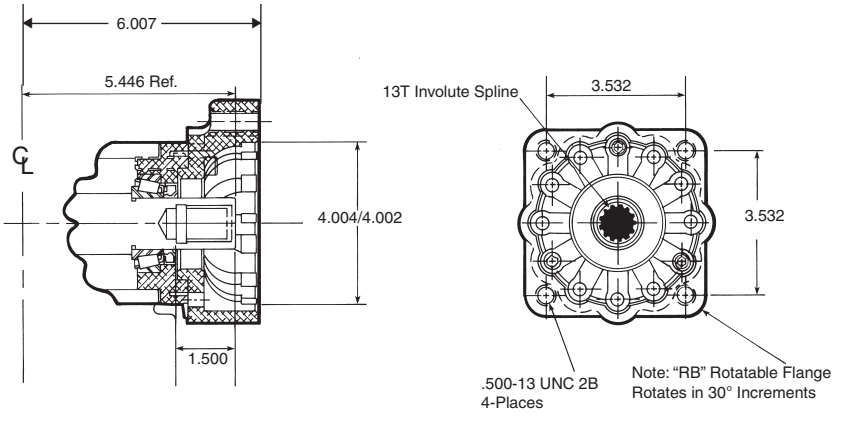

Suffix SK

S.A.E. Class “B” 2 & 4 Bolt Flange
S.A.E. Class “B” Shaft (7/8" - 13T Involute Spline)

Available for the following P.T.O.s:
880

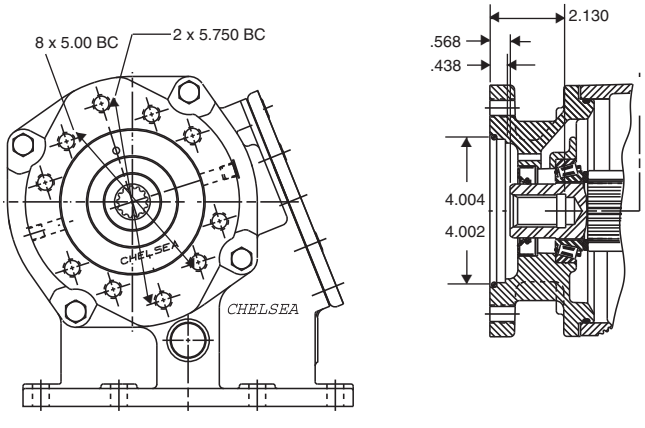

* Recommended Grease: Texaco Coupling Grease, Code 1912 or Equivalent

NOTE: PUMP INSTALLATION PRECAUTIONS
Use a bracket to support the pump to the transmission if:
- The pump weighs 40 pounds or more.
- The combined length of the P.T.O. and pump is 18 inches or more from the P.T.O. centerline to the end of the pump.

Also remember to pack the female pilot of the P.T.O. pump flange with grease before installing the pump on the P.T.O.

Suffix SK

S.A.E. Class “C” 2 & 4 Bolt Flange
S.A.E. Class “C” Shaft (1-1/4" - 14T Involute Spline)

Available for the following P.T.O.s:
880

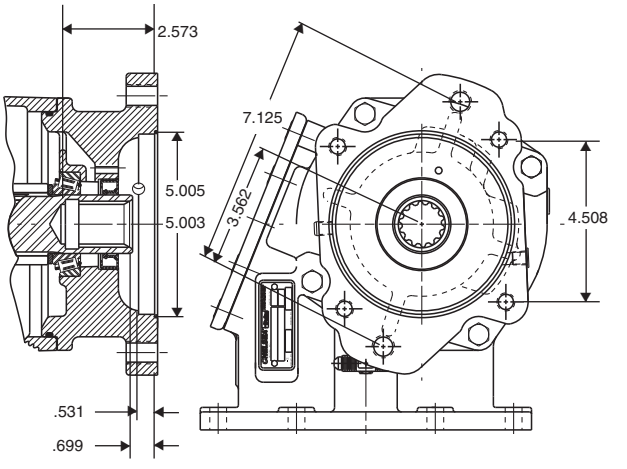

Suffix SS

S.A.E. Class “C” 2 & 4 Bolt Flange
S.A.E. Class “C” Shaft
(1-1/4" - 14T Involute Spline) Both Ends

Available for the following P.T.O.s:
880

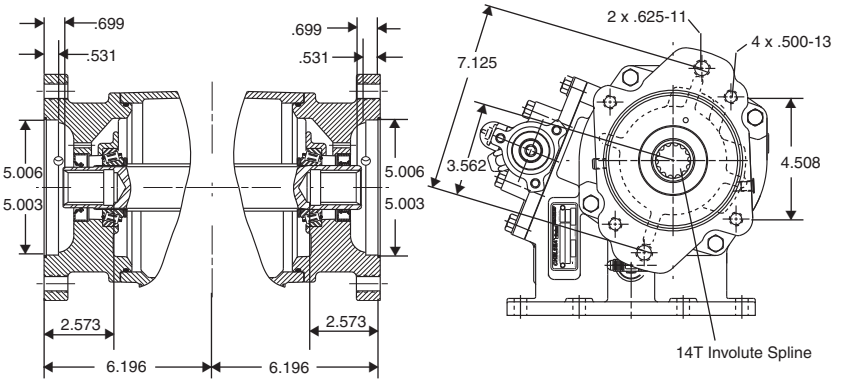

Suffix XK

S.A.E. Class “B” 2 or 4 Bolt
For 7/8" - 13 Tooth Splined Shaft

Available for the following P.T.O.s:
880

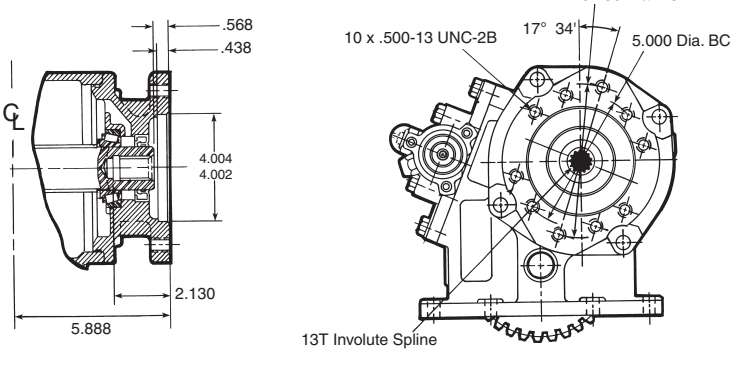

* Recommended Grease: Texaco Coupling Grease, Code 1912 or Equivalent

NOTE: PUMP INSTALLATION PRECAUTIONS
Use a bracket to support the pump to the transmission if:

- The pump weighs 40 pounds or more.
- The combined length of the P.T.O. and pump is 18 inches or more from the P.T.O. centerline to the end of the pump.

Also remember to pack the female pilot of the P.T.O. pump flange with grease before installing the pump on the P.T.O.

Suffix XR

For Chelsea/Tyrone Pumps
For 7/8" - 13 Tooth Splined Shaft

Available for the following P.T.O.s:
812

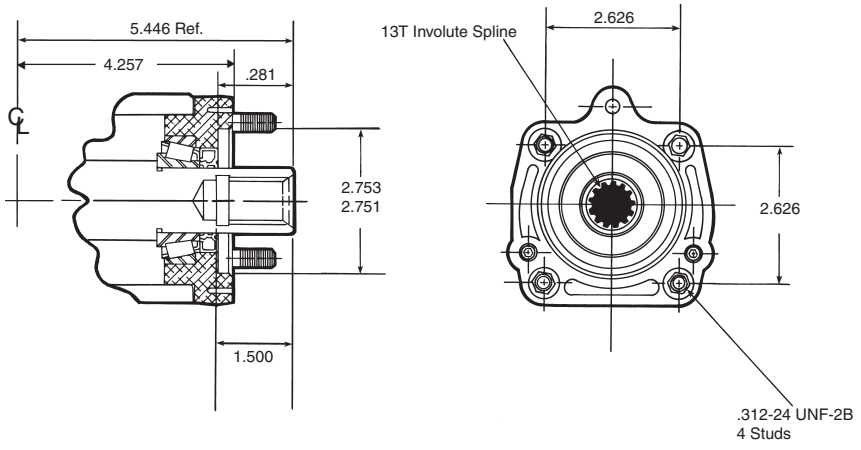

Suffix XS

S.A.E. "C" 2 or 4 Bolt
For 1-1/4" - 14 Tooth Splined Shaft

Available for the following P.T.O.s:
823

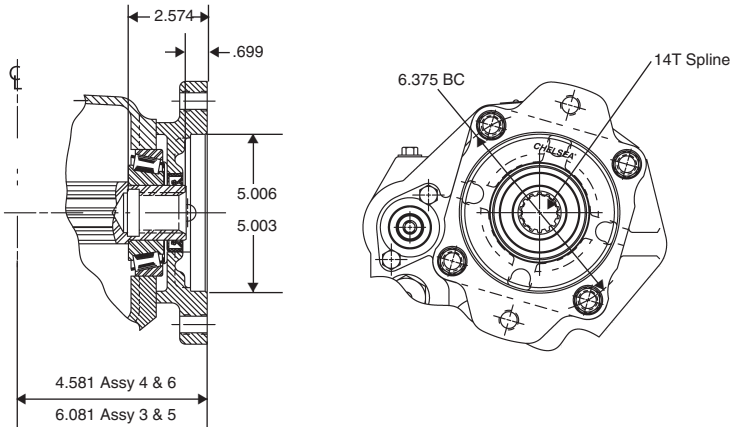

Suffix XS

S.A.E. Class "C" 2 or 4 Bolt
For 1 1/4" - 14 Tooth Involute Splined Shaft

Available for the following P.T.O.s:
880

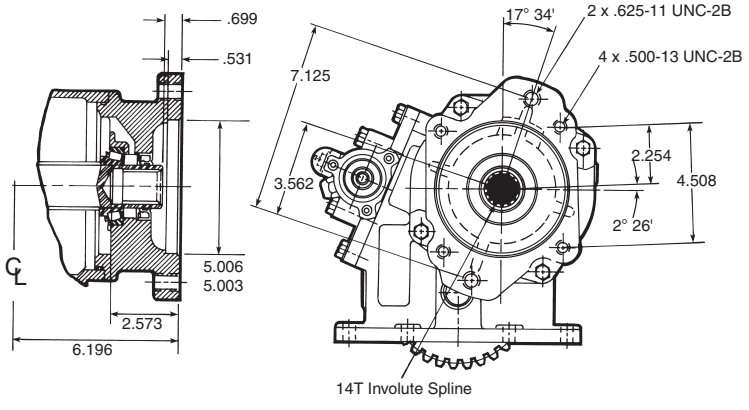

* Recommended Grease: Texaco Coupling Grease, Code 1912 or Equivalent

NOTE: PUMP INSTALLATION PRECAUTIONS
Use a bracket to support the pump to the transmission if:
- The pump weighs 40 pounds or more.
- The combined length of the P.T.O. and pump is 18 inches or more from the P.T.O. centerline to the end of the pump.

Also remember to pack the female pilot of the P.T.O. pump flange with grease before installing the pump on the P.T.O.

Suffix XU

S.A.E. Class “C” 2 Bolt
For 1-1/4" - 14 Tooth Splined Shaft

Available for the following P.T.O.s:
823

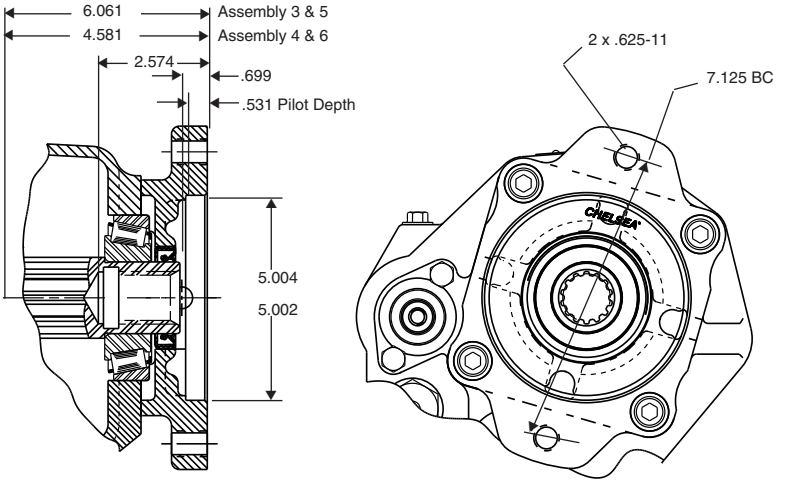

Suffix XV

Spicer 1410 Flange

Available for the following P.T.O.s:
823

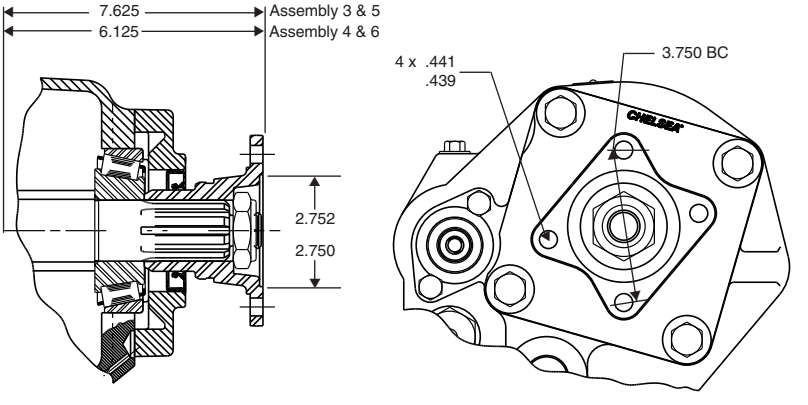

Suffix XY

DIN 5462 / ISO 14
For 32mm x 36mm - 8 Tooth Splined Shaft

Available for the following P.T.O.s:
823

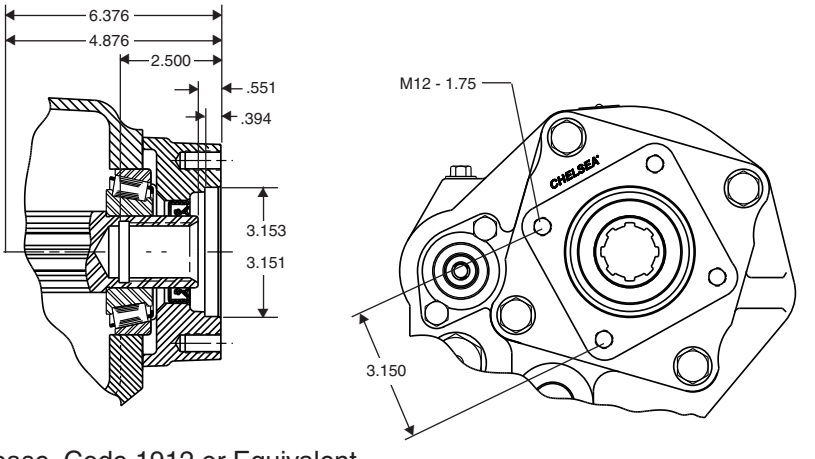

* Recommended Grease: Texaco Coupling Grease, Code 1912 or Equivalent

NOTE: PUMP INSTALLATION PRECAUTIONS
Use a bracket to support the pump to the transmission if:

- The pump weighs 40 pounds or more.
- The combined length of the P.T.O. and pump is 18 inches or more from the P.T.O. centerline to the end of the pump.

Also remember to pack the female pilot of the P.T.O. pump flange with grease before installing the pump on the P.T.O.

Suffix XY

Din 5462 Pump Mounting
For B8 x 32 x 36 Din 5462 Spline Shaft

Available for the following P.T.O.s:
880

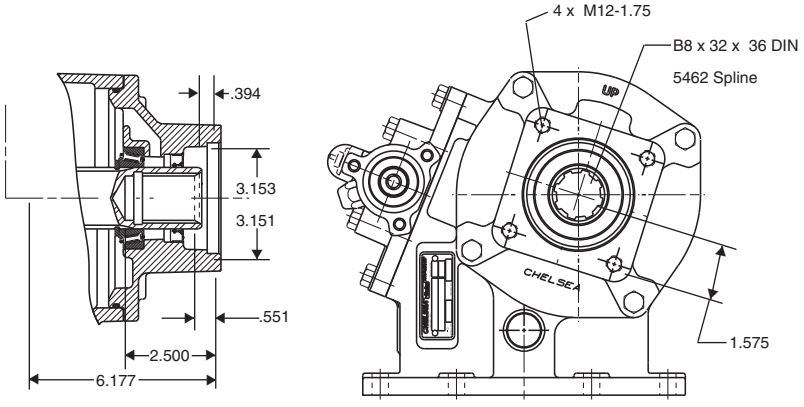

Suffix YY

Double output
For 32mm x 36mm - 8 Tooth Splined Shaft

Available for the following P.T.O.s:
823

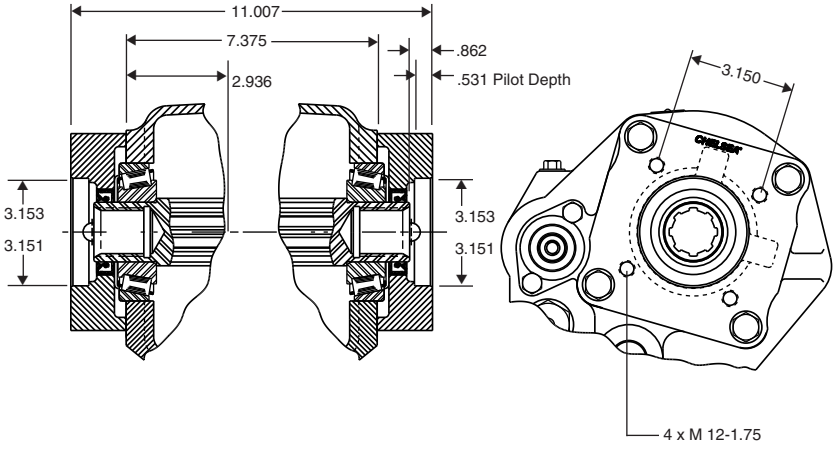

Suffix YY

DIN 80mm Pump Mounting
For dual Shaft 16 Tooth External /
10 Tooth Internal Spline

Available for the following P.T.O.s:
880

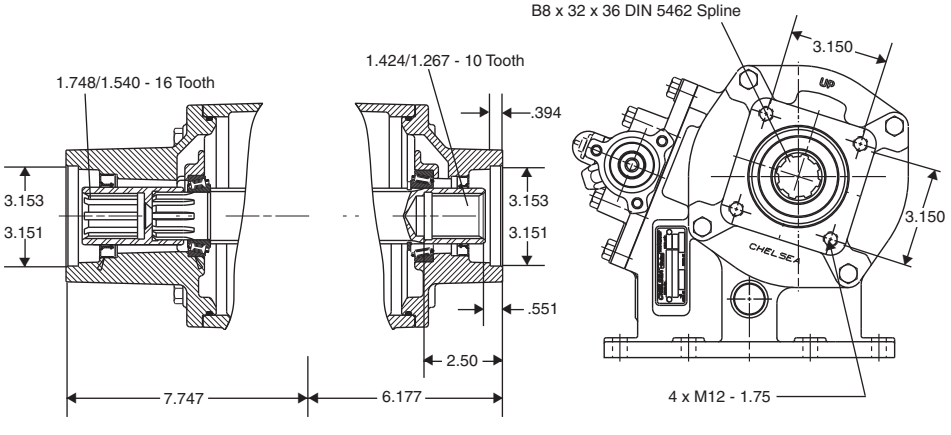

* Recommended Grease: Texaco Coupling Grease, Code 1912 or Equivalent

NOTE: PUMP INSTALLATION PRECAUTIONS
Use a bracket to support the pump to the transmission if:

- The pump weighs 40 pounds or more.
- The combined length of the P.T.O. and pump is 18 inches or more from the P.T.O. centerline to the end of the pump.

Also remember to pack the female pilot of the P.T.O. pump flange with grease before installing the pump on the P.T.O.

P.T.O. Shift Mechanisms Field Conversion Kits

Series	Assembly Arrangement	Wire To Air	Lever To Air	Wire to Elec. over Air		Lever to Elec. Over Air	
				12 Volt	24 Volt	12 Volt	24Vol
489	3, 4, 5 & 6	328390-117X	328390-117X	328390-119X	328390-120X	No Longer Available	No Longer Available
680	3, 4, 5 & 6	328390-117X	328390-117X	328390-119X	328390-120X		
812	3, 4, 5 & 6	328390-90X	328390-89X	328390-113X	328390-114X	328390-111X	328390-112X
823	3, 4, 5 & 6		328390-154X				

Cover Assemblies

Series/ Application	Assembly Arrangement	Wire Control	Lever Control	Air Control
489 Q, W & X	3 & 6	329119-1X	No Longer Available	329036-1X
489 Q, W, & X	4 & 5	329119-2X		329036-2X
489 F,L,R,S & U	3 & 6	329121-1X		329036-1X
489 F,L,R,S & U	4 & 5	329121-2X		329036-2X
680 Q	3 & 6	329119-1X		329036-1X
680 Q	4 & 5	329119-2X		329036-2X
680 F & S	3 & 6	329121-1X		329036-1X
680 F & S	4 & 5	329121-2X		329036-2X
812	3 & 6	328804-1X	328752X	328753X
812	4 & 5	328804-2X	328752X	328753X
880	3,4,5,6		329125X	329126X

Installation Kits

Series/ Application	Wire Control	Air Control	Electric Over Air		Air Shift w/ Combo Valve	Air Shift w/ Valve Combo
			12 Volt	24 Volt P.T.O. Kick Out		
489	328380X	328388-37X	328388-12X	328388-24X		
680	328380X	328388-37X	328388-47X	328388-48X	328388-72X	328388-65X
812	328380X	328388-37X	328388-47X	328388-48X		
823		328388-61X				
880		329216-3X				

Parker Hannifin Corporation
Chelsea Products Division
Olive Branch, MS 38654 USA

Filler Blocks

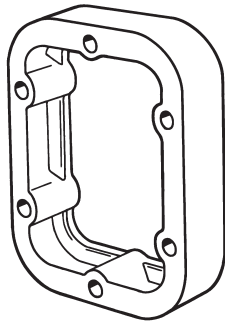

Filler blocks are required as called for on the P.T.O. application pages, where it is necessary to use a spacer to adapt the Power Take-Off to a particular transmission.

Two filler blocks may be used in combination with one or more gaskets between the filler block surfaces.

In computing the total thickness of the filler block and gasket combination, use a factor of .012" (compressed thickness of a .020" gasket 35-P-9-2 or 35-P-15-2) for every .020" gasket required in the installation.

S.A.E. 6-Bolt Filler Blocks

Part Number	"A" Thickness	Material	Part Number	"A" Thickness	Material
8-A-032	.032"	Fiber	8-A-375	.375"	Cast Iron
8-A-093	.093"	Steel	8-A-500	.500"	Cast Iron
8-A-062	.062"	Fiber or Steel	8-A-600	.600"	Cast Iron
8-A-165	.165"	Steel	8-A-650	.650"	Cast Iron
8-A-190	.190"	Steel			
			8-A-700	.700"	Cast Iron
8-A-248	.248"	Steel or Cast Iron	8-A-1005	1.005"	Cast Iron
8-A-295	.295"	Cast Iron	8-A-1200	1.200"	Cast Iron

S.A.E. 8-Bolt Adapter Plates

8-Bolt adapter plates are used to convert an S.A.E. 8-Bolt aperture or a non-standard opening to an S.A.E. 6-Bolt aperture.

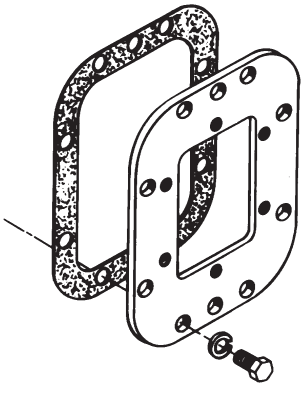

Adapter Plates

Adapter Kit Number	"A" Thickness or Angularity	Adapter Plate Part Number	Stud Kit Number
310778X	.375"	26-P-22	328170-127X
328787X	.460"	26-P-27	328170-129X
328564X	.460"	26-P-27	328170-127X
328481X	.248"	328453X	328170-128X

Powershift P.T.O.s

P.T.O. Options Chart – Powershift P.T.O.s

P.T.O. Series		230/231	236	243	250	270/271	800	852	885
Lubrication									
X	Standard	x	x		x	x	x		x
P	Pressure	x	x	x		x	x	x	x
Shifting									
A	Air Shift (Pilot Valve)	x	x						x
B	Electric/Hydraulic 12V			x	x	x	x	x	
D	Electric/Hydraulic 24V			x	x	x	x	x	
F	No Valve							x	
J	Elec./Air 24V w/EOC	x							x
K	Elec./Hyd. 12V w/EOC			x		x	x	x	
L	Elec./Hyd. 24V w/EOC			x		x	x	x	
N	Elec./Air 12V w/EOC	x							x
P	Electric/Air 12V	x	x						x
Q	Electric/Air 24V	x	x						x
S	Air Shift w/P.T.O./Dump Pump Combo Valve	x	x			x			
T	Air Shift w/P.T.O./Dump Pump Combo Valve Less Kick Out & Spring Return	x	x			x			
V	Air Shift, Less Installation Kit								x
Output									
AB	DIN 120								x
AD	S.A.E. “A” 2 Bolt			x					
AF	S.A.E. “BB” 2 Bolt	x	x			x			
BA	1-1/4" Round Shaft w/ Self Adjusting Shaft Brake (Automatic Transmissions)	x				x			
BD*	1-1/4" Round Shaft w/ Self Adjusting Shaft Brake (Manual Transmissions)	x	x						
RA	Rotatable “B” 2 Bolt	x	x			x			
RB	Rotatable “B” 4 Bolt	x	x			x			
RF	Rotatable “B” 2 Bolt	x	x			x			
XB	1" Round Shaft			x	x				
XC	1-1/8" Round Shaft						x		
XD	1-1/4" Round Shaft	x	x			x			
XE	S.A.E. “A” 2 Bolt	x	x	x	x	x			
XK	S.A.E. “B” 2 or 4 Bolt	x	x			x			
XP	S.A.E. “A” 2 Bolt	x	x			x			
XR	Chelsea Special	x	x			x			
XS	S.A.E. “C” 2 or 4 Bolt							x	x
XU	S.A.E. “C” 2 Bolt							x	
XV	1-1/2" 10 Spline w/1410 Flange							x	x
XX	1-1/4" Tapered Shaft w/ DIN 100 Flange	x	x			x			
XY	Special (DIN 5462)	x	x			x			
XZ	1-1/8" Tapered Shaft							x	
45	P16-45A-1D6			x					
65	P16-65A-1D6			x					
85	P16-85A-1D6			x					
00	P16-100A-1D6			x					
15	P16-115A-1D6			x					
45	P16-45C-1D6				x				

***Not For Use on Automatic Transmissions**

NOTE: Always Check Price Book for Current Options

Continued on next page

Parker Hannifin Corporation
Chelsea Products Division
Olive Branch, MS 38654 USA

P.T.O. Options Chart – Powershift P.T.O.s

P.T.O. Series		230/231	236	243	250	270/271	800	852	885
65	P16-65C-1D6				x				
85	P16-85C-1D6				x				
15	P16-115C-1D6				x				
508	CGP-P5C008-1AA				x				
510	CGP-P5C010-1AA				x				
513	CGP-P5C013-1AA				x				
519	CGP-P5C019-1AA				x				
1116	CGP-P11C016-1AC				x				
1121	CGP-P11C021-1AC				x				
1126	CGP-P11C026-1AC				x				
1129	CGP-P11C029-1AC				x				
1137	CGP-P11C037-1AC				x				
1449	CGP-P31C054-1AE				x				
1462	CGP-P31C061-1AE				x				

*Not For Use on Automatic Transmissions

NOTE: Always Check Price Book for Current Options

Installation Kits

Series Application		Electric Over Air 12 Volt	Electric Over Air 24 Volt
270/271	w/o E.O.C.	328715X	328749X
800	w/o E.O.C.		
852	w/o E.O.C.		
270/271	w/ E.O.C.	328924-12X	328924-24X
800	w/ E.O.C.		
852	w/ E.O.C.		

Parker Hannifin Corporation
Chelsea Products Division
Olive Branch, MS 38654 USA

Powershift P.T.O.s

For converting Chelsea Powershift P.T.O.s from a driveshaft output to a pump flange output, use the following kits.

230/231, 236 & 2230 Series

Pump Suffix	Kit No. Suffix	Kit Number	Assembly	Flange Type	Shaft Type
AF	XD to AF	329160-50X	3 & 5	S.A.E. “B” 2 or 4 Bolt	1" - 15 Tooth Splined
	XD to AF	329160-51X	4 & 6	S.A.E. “B” 2 or 4 Bolt	1" - 15 Tooth Splined
BD*	XD to BD	329043-9X	3 & 5	XD w/ Shaft Brake	1-1/4" Round Shaft
	XD to BD	329043-10X	4 & 6	XD w/ Shaft Brake	1-1/4" Round Shaft
XK	XD to XK	329160-11X	3 & 5	S.A.E. “B” 2 or 4 Bolt	7/8" - 13 Tooth Splined
	XD to XK	329160-15X	4 & 6	S.A.E. “B” 2 or 4 Bolt	7/8" - 13 Tooth Splined
XP	XD to XP	329160-12X	3 & 5	S.A.E. “A” 2 Bolt	7/8" - 13 Tooth Splined
	XD to XP	329160-16X	4 & 6	S.A.E. “A” 2 Bolt	7/8" - 13 Tooth Splined
XR	XD to XR	329160-13X	3 & 5	Chelsea Special	7/8" - 13 Tooth Splined
RA	XD to RA	329160-33X	3 & 5	S.A.E. “B” 2 Bolt Rotatable	7/8" - 13 Tooth Splined
	XR to RA	329160-35X	3 & 5	S.A.E. “B” 2 Bolt Rotatable	7/8" - 13 Tooth Splined
RB	XD to RB	329160-34X	3 & 5	S.A.E. “B” 4 Bolt Rotatable	7/8" - 13 Tooth Splined
	XR to RB	329160-36X	3 & 5	S.A.E. “B” 4 Bolt Rotatable	7/8" - 13 Tooth Splined
RF	XD to RF	329160-46X	3 & 5	S.A.E. “B” 2 Bolt Rotatable	1" - 15 Tooth Splined
XE	XD to XE	329160-55X	3 & 5	S.A.E. “A” 2 Bolt	5/8" - 9 Tooth Splined
XX	XD to XX	329160-43X	3 & 5	DIN 100 Companion Flange	1-1/4" Tapered Shaft
XY	XD to XY	329160-14X	3 & 5	DIN 5462	8 Tooth Splined

270/271 Series

Pump Suffix	Kit No. Suffix	Kit Number	Assembly	Flange Type	Shaft Type
AF	XD to AF	329160-52X	3 & 5	S.A.E. “B” 2 or 4 Bolt	1" - 15 Tooth Splined
	XD to AF	329160-53X	4 & 6	S.A.E. “B” 2 or 4 Bolt	1" - 15 Tooth Splined
XK	XD to XK	329160-1X	3 & 5	S.A.E. “B” 2 or 4 Bolt	7/8" - 13 Tooth Splined
	XD to XK	329160-5X	4 & 6	S.A.E. “B” 2 or 4 Bolt	7/8" - 13 Tooth Splined
XP	XD to XP	329160-2X	3 & 5	S.A.E. “A” 2 Bolt	7/8" - 13 Tooth Splined
	XD to XP	329160-6X	4 & 6	S.A.E. “A” 2 Bolt	7/8" - 13 Tooth Splined
XR	XD to XR	329160-3X	3 & 5	Chelsea Special	7/8" - 13 Tooth Splined
RA	XD to RA	329160-31X	3 & 5	S.A.E. “B” 2 Bolt Rotatable	7/8" - 13 Tooth Splined
	XR to RA	329160-35X	3 & 5	S.A.E. “B” 2 Bolt Rotatable	7/8" - 13 Tooth Splined
RB	XD to RB	329160-32X	3 & 5	S.A.E. “B” 4 Bolt Rotatable	7/8" - 13 Tooth Splined
	XR to RB	329160-36X	3 & 5	S.A.E. “B” 4 Bolt Rotatable	7/8" - 13 Tooth Splined
RF	XD to RF	329160-47X	3 & 5	S.A.E. “B” 2 Bolt Rotatable	1" - 15 Tooth Splined
XE	XD to XE	329160-54X	3 & 5	S.A.E. “A” 2 Bolt	5/8" - 9 Tooth Splined
XX	XD to XX	329160-42X	3 & 5	DIN 100 Companion Flange	1-1/4" Tapered Shaft
XY	XD to XY	329160-4X	3 & 5	DIN 5462	8 Tooth Splined

885 Series

Pump Suffix	Kit No. Suffix	Kit Number	Assembly	Flange Type	Shaft Type
XS	XV to XS	328591-37X	3, 4, 5, 6	S.A.E. “C” 2 or 4 Bolt	1-1/4” - 14 Tooth

***Not For Use on Automatic Transmissions**

Parker Hannifin Corporation
Chelsea Products Division
Olive Branch, MS 38654 USA

Suffix AF (Assy 3 & 5)
S.A.E. Class “BB” 2 or 4 Bolt
For 1" - 15 Tooth Splined Shaft

Available for the following P.T.O.s:
230, 231, 236, 270, 271, 2230

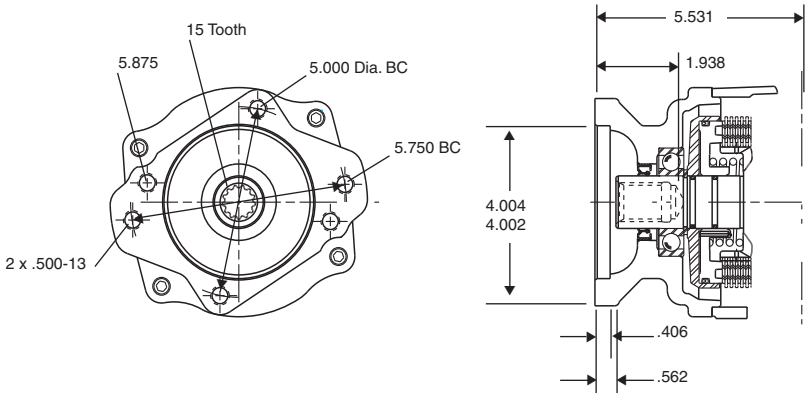

Suffix AF (Assy 4 & 6)
S.A.E. Class “BB” 2 or 4 Bolt
For 1" - 15 Tooth Splined Shaft

Available for the following P.T.O.s:
230, 231, 236, 270, 271, 2230

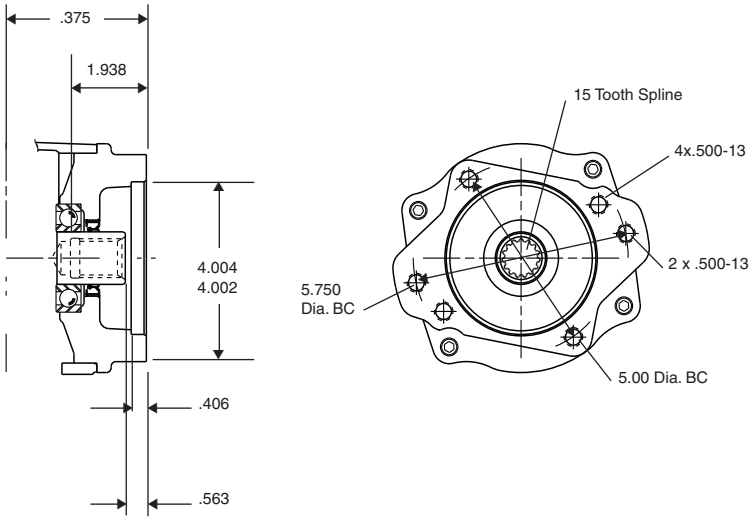

Suffix XK (Assy 3 & 5)
S.A.E. Class “B” 2 or 4 Bolt
For 7/8" - 13 Tooth Splined Shaft

Available for the following P.T.O.s:
230, 231, 236, 270, 271, 2230

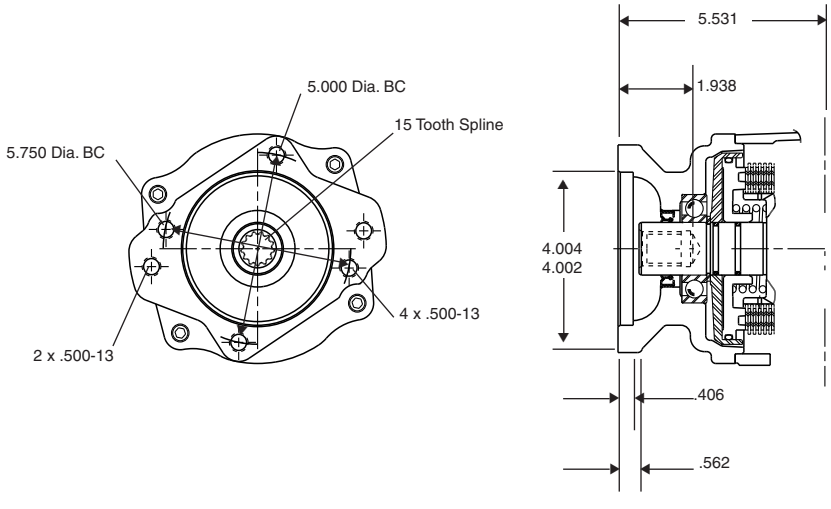

* Recommended Grease: Texaco Coupling Grease, Code 1912 or Equivalent

NOTE: PUMP INSTALLATION PRECAUTIONS
Use a bracket to support the pump to the transmission if:

- The pump weighs 40 pounds or more.
- The combined length of the P.T.O. and pump is 18 inches or more from the P.T.O. centerline to the end of the pump.

Also remember to pack the female pilot of the P.T.O. pump flange with grease before installing the pump on the P.T.O.

Suffix XK (Assy 4 & 6)
S.A.E. Class “B” 2 or 4 Bolt
For 7/8" - 13 Tooth Splined Shaft

Available for the following P.T.O.s:
230, 231, 236, 270, 271, 2230

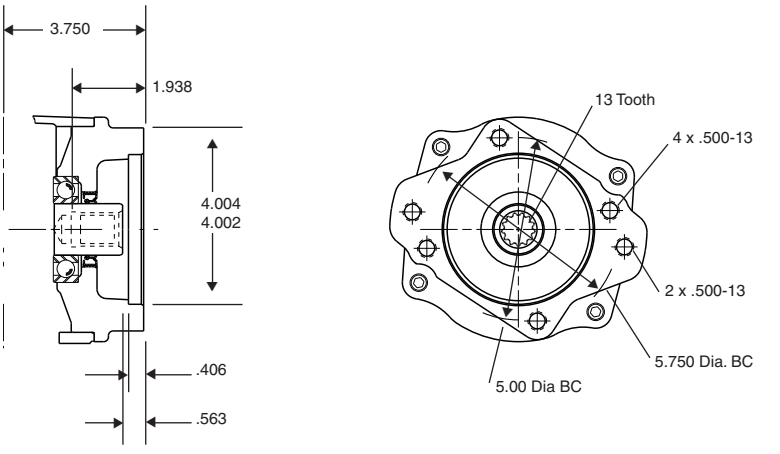

Suffix XP (Assy 3 & 5)
S.A.E. Class “A” 2 Bolt
For 7/8" - 13 Tooth Splined Shaft

Available for the following P.T.O.s:
230, 231, 236, 270, 271, 2230

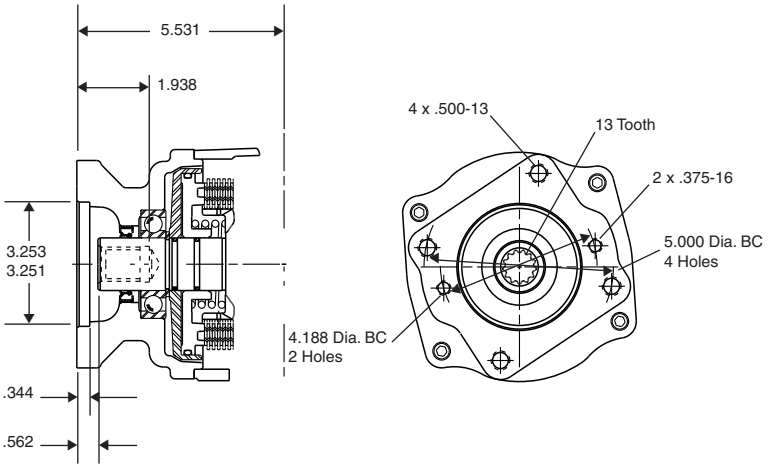

Suffix XP (Assy 4 & 6)
S.A.E. Class “A” 2 Bolt
For 7/8" - 13 Tooth Splined Shaft

Available for the following P.T.O.s:
230, 231, 236, 270, 271, 2230

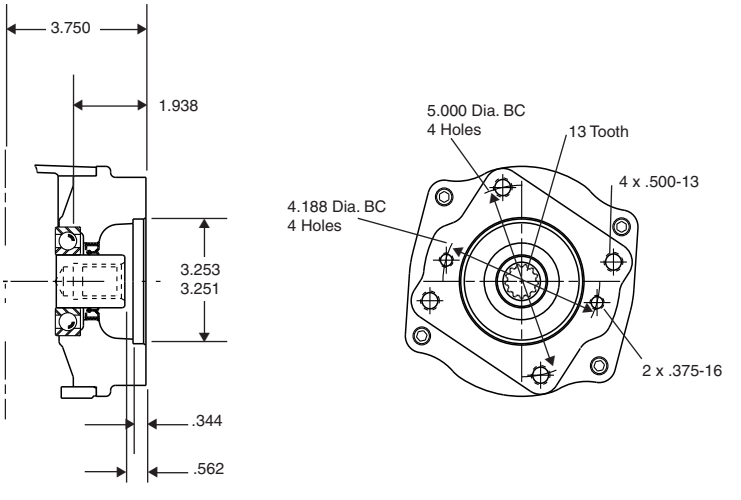

* Recommended Grease: Texaco Coupling Grease, Code 1912 or Equivalent

NOTE: PUMP INSTALLATION PRECAUTIONS
Use a bracket to support the pump to the transmission if:

- The pump weighs 40 pounds or more.
- The combined length of the P.T.O. and pump is 18 inches or more from the P.T.O. centerline to the end of the pump.

Also remember to pack the female pilot of the P.T.O. pump flange with grease before installing the pump on the P.T.O.

Suffix XR (Assy 3 & 5)
For Chelsea Pumps
For 7/8" - 13 Tooth Splined Shaft

Available for the following P.T.O.s:
230, 231, 236, 270, 271, 2230

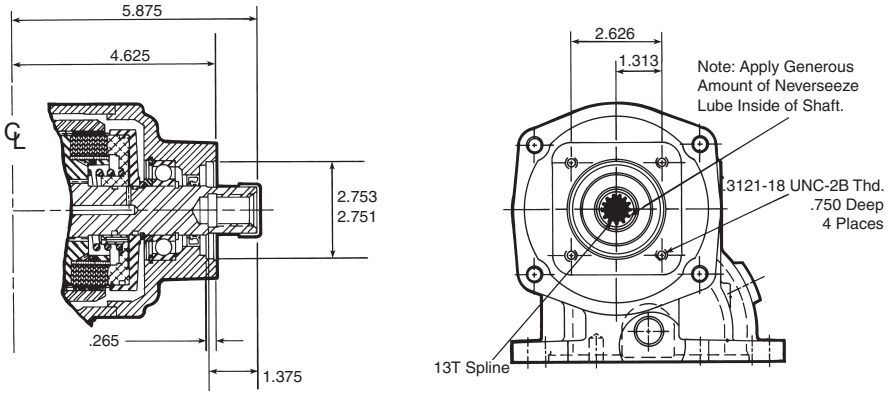

Suffix RA (Assy 3 & 5)
S.A.E. Class "B" 2 Bolt Rotatable
For 7/8" - 13 Tooth Splined Shaft

Available for the following P.T.O.s:
230, 231, 236, 270, 271, 2230

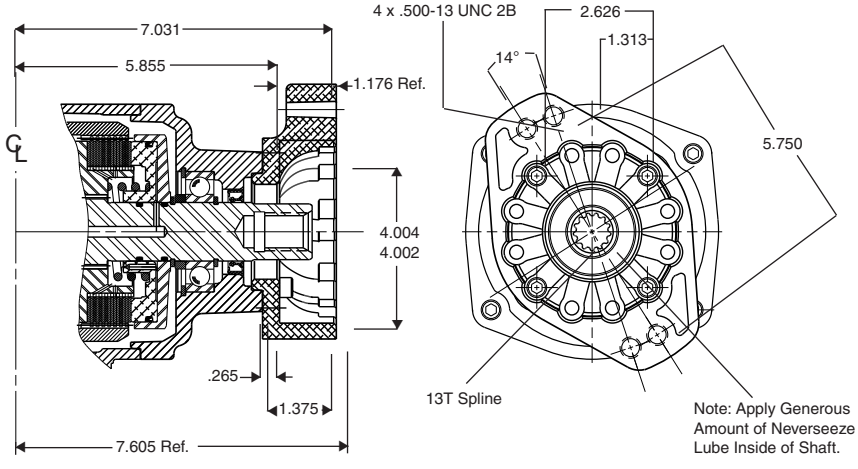

Suffix RB (Assy 3 & 5)
S.A.E. Class "B" 4 Bolt Rotatable
For 7/8" - 13 Tooth Splined Shaft

Available for the following P.T.O.s:
230, 231, 236, 270, 271, 2230

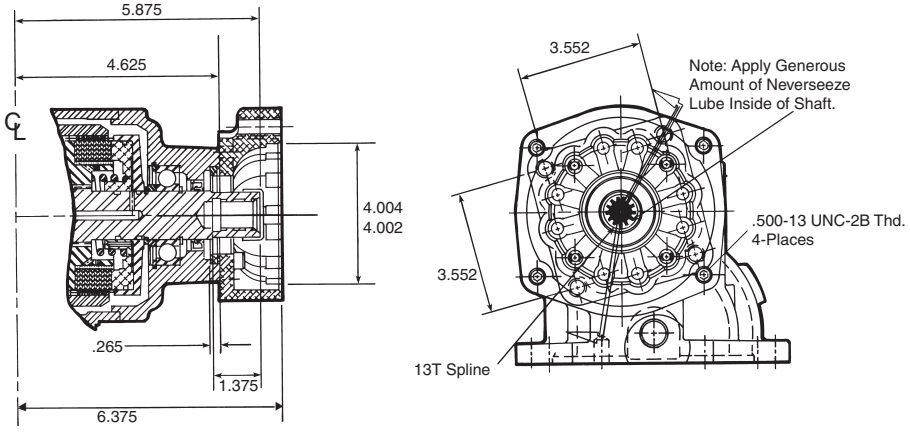

* Recommended Grease: Texaco Coupling Grease, Code 1912 or Equivalent

NOTE: PUMP INSTALLATION PRECAUTIONS
Use a bracket to support the pump to the transmission if:

- The pump weighs 40 pounds or more.
- The combined length of the P.T.O. and pump is 18 inches or more from the P.T.O. centerline to the end of the pump.

Also remember to pack the female pilot of the P.T.O. pump flange with grease before installing the pump on the P.T.O.

Suffix XS

S.A.E. Class “C” 4 Bolt
For 1-1/4" - 14 Tooth Splined Shaft

Available for the following P.T.O.s:
852, 885

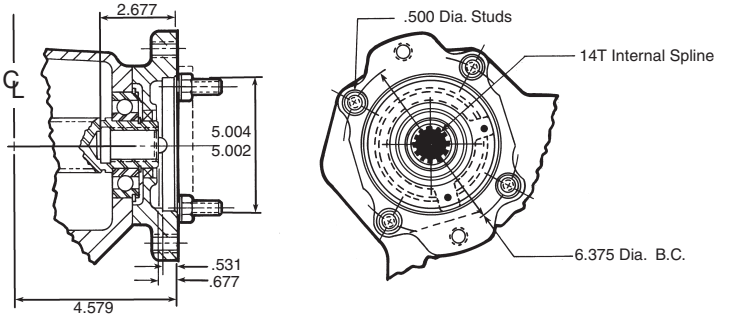

Suffix XU

S.A.E. Class “C” 2 Bolt
For 1-1/4" - 14 Tooth Splined Shaft

Available for the following P.T.O.s:
852

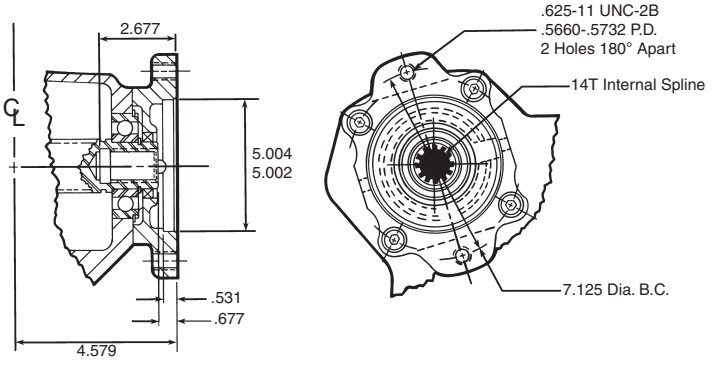

Suffix XY

Special for 1.4205/1.2645-8 Tooth
Splined Shaft

Available for the following P.T.O.s:
230, 236, 270, 271

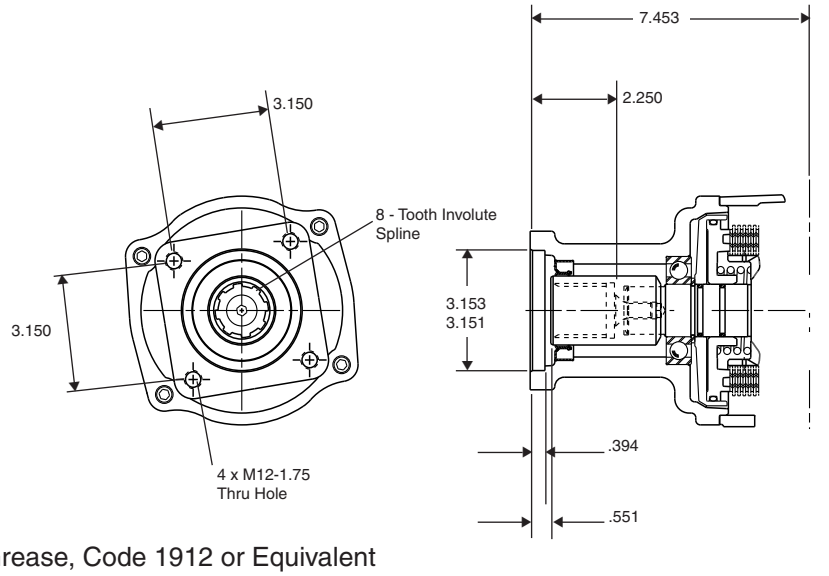

* Recommended Grease: Texaco Coupling Grease, Code 1912 or Equivalent

NOTE: PUMP INSTALLATION PRECAUTIONS
Use a bracket to support the pump to the transmission if:

- The pump weighs 40 pounds or more.
- The combined length of the P.T.O. and pump is 18 inches or more from the P.T.O. centerline to the end of the pump.

Also remember to pack the female pilot of the P.T.O. pump flange with grease before installing the pump on the P.T.O.

P.T.O. Options Chart

P.T.O. Series		267**	269	277/278	859	867
Lubrication						
P	Pressure Lube	x		x	x	x
R	Pressure Lube with Solenoid Cap Rotated 120 Degrees			x	x	
V	Rotated Valve Cap, Wet Spline			x		
W	Wet Spline	x	x	x	x	
Shifting						
B	12 Volt Electric/Hydraulic			x	x	
D	24 Volt Electric/Hydraulic			x	x	
G	12 Volt Electric/Hydraulic w/Remote Mounted Solenoid Valve			x	x	
H	24 Volt Electric/Hydraulic w/Remote Mounted Solenoid Valve			x	x	
K	12 Volt Electric/Hydraulic w/Electronic Overspeed Control			x	x	
L	24 Volt Electric/Hydraulic w/Electronic Overspeed Control			x	x	
M	Constant Engagement No Shifter	x	x			x
M	12 Volt w/o Installation Kit (Europe Only)			x	x	
N	24 Volt w/o Installation Kit (Europe Only)			x	x	
S	Air Shift w/P.T.O./Dump Pump Combo Valve			x		
T	Air Shift w/P.T.O./Dump Pump Combo Valve less Kick Out & Spring Return			x		
Output						
AB	DIN 120 Flange				x	x
AC	DIN 100 Flange				x	x
AF*	S.A.E. “B” 2 or 4 Bolt Flange, “BB” Shaft (1.00" 15 - Tooth)	x (w)		x (w)		x (w)
AK*	S.A.E. “B” 2 Bolt Flange, “B” Shaft (7/8" 13 - Tooth)	x (w)				
AZ	S.A.E. “B” 2 or 4 Bolt Flange, “C” Shaft (1.25" 14 - Tooth)	x			x	
BA	Shaft Brake w/ 1-1/4" Round Shaft			x	x	
BB	Shaft Brake, DIN 120				x	
BC	Shaft Brake, DIN 100				x	
GA	Rotatable “B” 2 Bolt Flange, “B” Shaft (7/8" 13 - Tooth) (Greaseable)	x				
GB	Rotatable “B” 4 Bolt Flange, “B” Shaft (7/8" 13 - Tooth) (Greaseable)	x				
GE	Rotatable S.A.E. “A” 2 or 4 Bolt Flange, “A” Shaft (5/8" 9 - Tooth) (Greaseable)	x				
GF	S.A.E. “B” 2 or 4 Bolt Flange, “BB” Shaft (1.00" 15 - Tooth) (Greaseable)	x				
GH	Rotatable “B” 2 Bolt Flange, “BB” Shaft (1.00" 15 - Tooth) (Greaseable)	x				
GJ	Rotatable “B” 4 Bolt Flange, “BB” Shaft (1.00" 15 - Tooth) (Greaseable)	x				
GK	S.A.E. “B” 2 or 4 Bolt Flange, “B” Shaft (7/8" 13 - Tooth) (Greaseable)	x				
GQ	S.A.E. “B” 2 or 4 Bolt Flange, “B” Shaft (7/8" 13 - Tooth) (Greaseable)	x				
GR	Chelsea Special Pump Mount, “B” Shaft (7/8" 13 - Tooth) (Greaseable)	x				
GY	DIN 5462 Pump Mounting (Greaseable)	x				
GZ	Non Standard Flange, “C” Shaft (1-1/4" 14 - Tooth) (Greaseable)	x				
PA	Special Rotatable S.A.E. “B” 2 Bolt Flange for Parker P Series Sculptured Pump, “B” Shaft (7/8" 13 - Tooth)	x		x		
PF	Special Rotatable S.A.E. “B” 2 Bolt Flange for Parker P Series Sculptured Pump, “BB” Shaft (1.00" 15 - Tooth)	x		x		
RA	Rotatable “B” 2 Bolt Flange, “B” Shaft (7/8" 13 - Tooth)	x		x		
RB	Rotatable “B” 4 Bolt Flange, “B” Shaft (7/8" 13 - Tooth)	x		x		
RC	Rotatable “A” 2 Bolt Flange, “A” Shaft (5/8" 9 - Tooth)	x				
RD	Rotatable “A” 2 Bolt Flange, “B” Shaft (7/8" 13 - Tooth)	x				
RE	Rotatable “B” 4 Bolt Flange, “BB” Shaft (1.00" 15 - Tooth)	x				
RF	Rotatable “B” 2 Bolt Flange, “BB” Shaft (1.00" 15 - Tooth)	x		x		

* Must use the “W” Lube Option on the 267 Series for this Output

** Any 267 Series using a “3” Arrangement Requiring a S.A.E. “B” Output Must use the “XQ” or “AK” Output Option Due to Interference Between the “XK” Flange and the Pressure Lube Fitting.

(w) = Wet Spline Flange Option

NOTE: Always Check Price Book for Current Options

Continued on next page

P.T.O. Options Chart

P.T.O. Series		267**	269	277/278	859	867
RG	Rotatable “B” 4 Bolt Flange, “BB” Shaft (1.00" 15 - Tooth)			x		
RY*	Rotatable DIN 5462 Pump Flange	x				
XD	S.A.E. “A” 2 or 4 Bolt Flange, “A” Shaft (5/8" 9 - Tooth)	x		x		
XE	S.A.E. “A” 2 or 4 Bolt Flange, “A” Shaft (5/8" 9 - Tooth)	x		x		
XK	S.A.E. “B” 2 or 4 Bolt Flange, “B” Shaft (7/8" 13 - Tooth)			x		
XP	Special S.A.E. “A” Pilot 2 or 4 Bolt Flange, “B” Shaft (7/8" 13 - Tooth)			x		
XQ	S.A.E. “B” 2 or 4 Bolt Flange, “B” Shaft (7/8" 13 - Tooth)	x				
XR	Non Standard Flange, “B” Shaft (7/8" 13 - Tooth)	x		x		
XS	S.A.E. “C” 2 or 4 Bolt Flange, “C” Shaft (1.25" 14 - Tooth)				x	x (w)
XV	10 Tooth Straight Spline Shaft w/ 1410 Flange (3-1-3881)			x	x	x
XX	1-1/4" S.A.E. Tapered Shaft w/ keyway	x		x		
XY	DIN 5462 Pump Mounting	x	x (w)	x	x	x

* Must use the “W” Lube Option on the 267 Series for this Output

** Any 267 Series using a “3” Arrangement Requiring a S.A.E. “B” Output Must use the “XQ” or “AK” Output Option Due to Interference Between the “XK” Flange and the Pressure Lube Fitting.

(w) = Wet Spline Flange Option

NOTE: Always Check Price Book for Current Options

Flange Field Conversion Kits

For converting Chelsea Powershift P.T.O.s from a driveshaft output (XD or XV) to a pump flange output, use the following kits.

267 Series

Pump Suffix	Kit Number	Assembly	Flange Type	Shaft Type
AF	328591-30X	3,4,5,6	S.A.E. “B” 2 or 4 Bolt	1.0" 15 - Tooth Spline
AK	328591-28X	3,4,5,6	S.A.E. “B” 2 Bolt	7/8" 13 - Tooth Spline
AZ	328591-70X	3,4,5,6	Non-Standard 4 Bolt	1-1/4" 14 - Tooth Spline
GA	328591-72X	3,4,5,6	Greaseable Rot. S.A.E. “B” 2 Bolt	7/8" 13 - Tooth Spline
GB	328591-74X	3,4,5,6	Greaseable Rot. S.A.E. “B” 4 Bolt	7/8" 13 - Tooth Spline
GF	328591-71X	3,4,5,6	Greaseable S.A.E. “B” 2 or 4 Bolt	1.0" 15 - Tooth Spline
GH	328591-116X	3,4,5,6	Greaseable S.A.E. “BB” 2 Bolt	1.0" 15 - Tooth Spline
GJ	328591-138X	3,4,5,6	Rotatable “B” 2 Bolt Flange, “BB” ShaftGreaseable	1.0" 15 - Tooth Spline
GK	328591-89X	3,4,5,6	Greaseable S.A.E. “B” 2 or 4 Bolt	7/8" 13 - Tooth Spline
GQ	328591-91X	3,4,5,6	Greaseable S.A.E. “B” 2 or 4 Bolt	7/8" 13 - Tooth Spline
GR	328591-76X	3,4,5,6	Greaseable Chelsea Special	7/8" 13 - Tooth Spline
GY	328591-92X	3,4,5,6	Greaseable DIN 5462	DIN 5462
GZ	328591-93X	3,4,5,6	Greaseable Non-Standard 4 Bolt	1-1/4" 14 - Tooth Spline
PA	328591-143X	3,4,5,6	Rotatable S.A.E. “B” 2 Bolt for Parker P Series Sculptered Pump	7/8" 13 - Tooth Spline
PF	328591-142X	3,4,5,6	Rotatable S.A.E. “B” 2 Bolt for Parker P Series Sculptered Pump	7/8" 13 - Tooth Spline 7/8" 13 - Tooth Spline
RA	328591-55X	3,4,5,6	Rotatable S.A.E. “B” 2 Bolt	7/8" 13 - Tooth Spline
RB	328591-56X	3,4,5,6	Rotatable S.A.E. “B” 4 Bolt	7/8" 13 - Tooth Spline
RC	328591-112X	3,4,5,6	Rotatable S.A.E. “A” 2 Bolt	5/8" 9 - Tooth Spline
RD	328591-113X	3,4,5,6	Rotatable S.A.E. “B” 2 Bolt	7/8" 13 - Tooth Spline
RE	328591-134X	3,4,5,6	Rotatable “B” 4 Bolt Flange, “BB” Shaft	1.0" 15 - Tooth Spline
RF	328591-78X	3,4,5,6	Rotatable S.A.E. “B” 2 Bolt	1.0"zz 15 - Tooth Spline
RY	328591-131X	3,4,5,6	Rotatable DIN 5462	DIN 5462
XE	328591-27X	3,4,5,6	S.A.E. “A” 2 or 4 Bolt	5/8" 9 - Tooth Spline
XK	328591-16X	4,5,6	S.A.E. “B” 2 or 4 Bolt	7/8" 13 - Tooth Spline
XQ	328591-17X	3,4,5,6	S.A.E. “B” 2 or 4 Bolt	7/8" 13 - Tooth Spline
XR	328591-52X	3,4,5,6	Chelsea Special	7/8" 13 - Tooth Spline
XY	328591-121X	3,4,5,6	DIN 5462	DIN 5462

277/278 Series

Pump Suffix	Kit Number	Assembly	Flange Type	Shaft Type
AF	329160-25X	5 (277), 3 (278)	S.A.E. “B” 2 or 4 Bolt	1.0” 15 - Tooth Spline
PA	329160-57X	5 (277), 3 (278)	Rotatable S.A.E. “B” 2 Bolt for Parker P Series Sculptered Pump	7/8” 13 - Tooth Spline
PF	329160-56X	5 (277), 3 (278)	Rotatable S.A.E. “B” 2 Bolt for Parker P Series Sculptered Pump	1.0” 15 - Tooth Spline
RA	329160-37X	5 (277), 3 (278)	Rotatable S.A.E. “B” 2 Bolt	7/8” 13 - Tooth Spline
RA (XR to RA)	329160-35X	5 (277), 3 (278)	Rotatable S.A.E. “B” 2 Bolt	7/8” 13 - Tooth Spline
RB	329160-38X	5 (277), 3 (278)	Rotatable S.A.E. “B” 4 Bolt	7/8” 13 - Tooth Spline
RB (XR to RB)	328160-36X	5 (277), 3 (278)	Rotatable S.A.E. “B” 4 Bolt	7/8” 13 - Tooth Spline
RF	329160-39X	5 (277), 3 (278)	Rotatable S.A.E. “B” 2 Bolt	1.0” 15 - Tooth Spline
RG	329160-45X	5 (277), 3 (278)	Rotatable S.A.E. “B” 4 Bolt	1.0” 15 - Tooth Spline
XE	329160-58X	5 (277), 3 (278)	S.A.E. “A” 2 or 4 Bolt	5/8” 9 - Tooth
XK	329160-21X	5 (277), 3 (278)	S.A.E. “B” 2 or 4 Bolt	7/8” 13 - Tooth Spline
XP	329160-23X	5 (277), 3 (278)	S.A.E. “A” 2 Bolt	7/8” 13 - Tooth Spline
XR	329160-22X	5 (277), 3 (278)	Chelsea Special	7/8” 13 - Tooth Spline
XY	329160-24X	5 (277), 3 (278)	DIN 5462 Pump Mounting	

Continued on next page

Flange Field Conversion Kits (continued)

For converting Chelsea Powershift P.T.O.s from a driveshaft output (XD or XV) to a pump flange output, use the following kits.

859 Series

Pump Suffix	Kit Number	Assembly	Flange Type	Shaft Type
AZ	329160-44X	5	S.A.E. “B” 2 & 4 Bolt	1-1/4" 14 - Tooth Spline
XY	329160-40X	5	DIN 5462	DIN 5462 8 - Tooth Spline
XS	329160-29X	5	S.A.E. “C” 2 or 4 Bolt Flange	1.25" 14 - Tooth Spline

Suffix AF

S.A.E. Class “BB” 2 or 4 Bolt
For 1" - 15 Splined Shaft

Available for the following P.T.O.s:
267

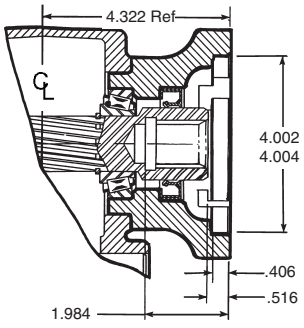

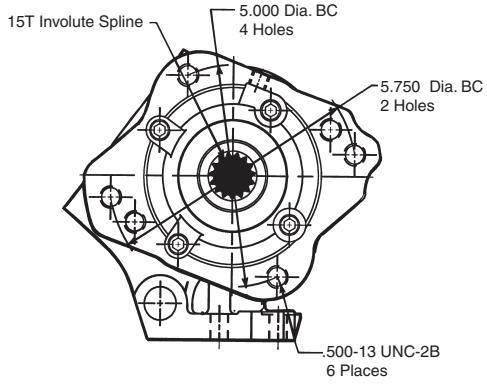

Suffix AK

S.A.E. Class “B” 2 Bolt
For 7/8" - 13 Tooth Splined Shaft

Available for the following P.T.O.s:
267

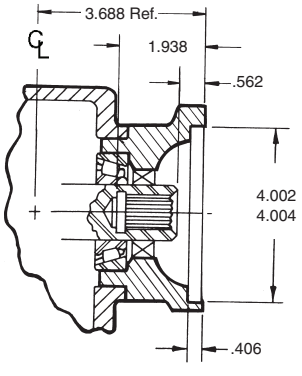

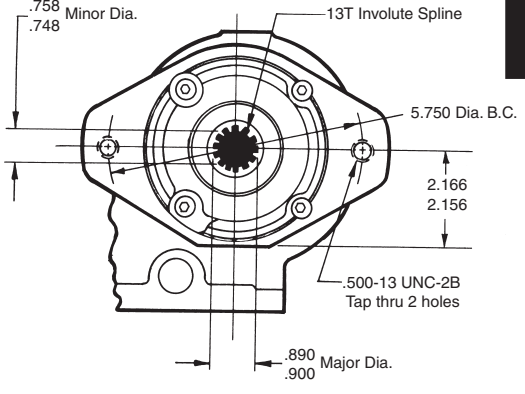

Suffix AZ

S.A.E. Class “B” 4 Bolt
For 1-1/4" - 14 Tooth Splined Shaft

Available for the following P.T.O.s:
267

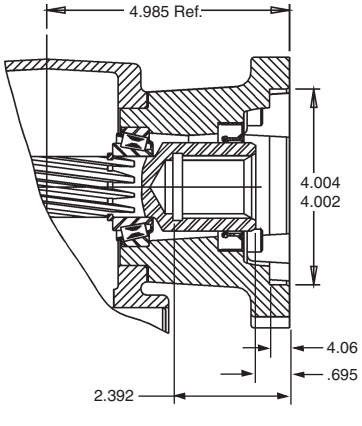

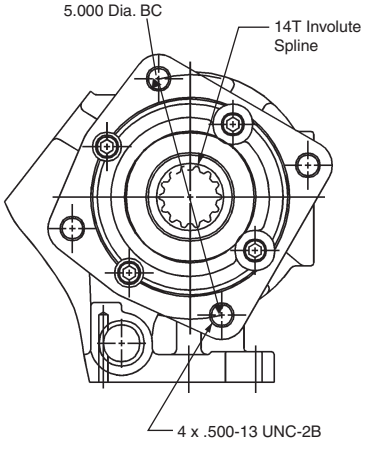

* Recommended Grease: Texaco Coupling Grease, Code 1912 or Equivalent

NOTE: PUMP INSTALLATION PRECAUTIONS
Use a bracket to support the pump to the transmission if:

- The pump weighs 40 pounds or more.
- The combined length of the P.T.O. and pump is 18 inches or more from the P.T.O. centerline to the end of the pump.

Also remember to pack the female pilot of the P.T.O. pump flange with grease before installing the pump on the P.T.O.

Suffix GA

S.A.E. Class “B” 2 Bolt Rotatable
For 7/8" - 13 Tooth Splined Shaft,
(*Greaseable)

Available for the following P.T.O.s:
267

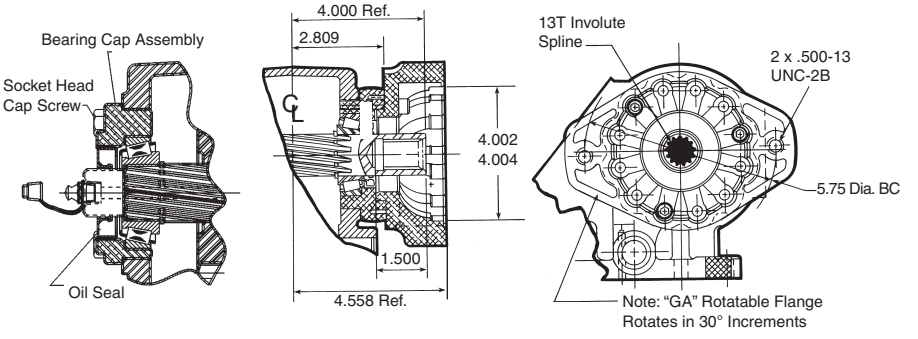

Suffix GB

S.A.E. Class “B” 4 Bolt Rotatable,
For 7/8" - 13 Tooth Splined Shaft,
(*Greaseable)

Available for the following P.T.O.s:
267

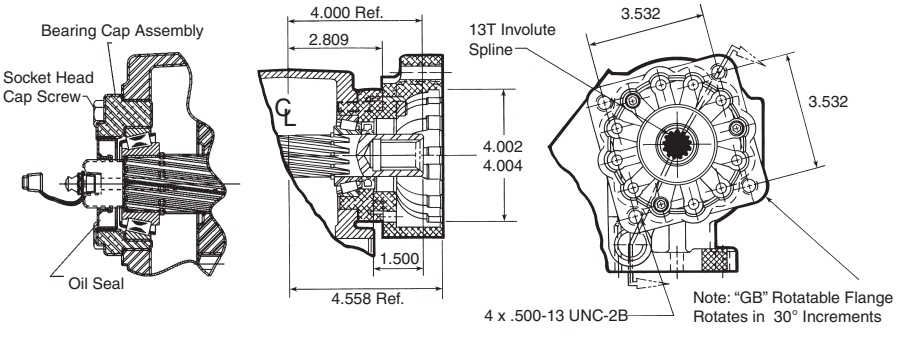

* Recommended Grease: Texaco Coupling Grease, Code 1912 or Equivalent

NOTE: PUMP INSTALLATION PRECAUTIONS
Use a bracket to support the pump to the transmission if:

- The pump weighs 40 pounds or more.
- The combined length of the P.T.O. and pump is 18 inches or more from the P.T.O. centerline to the end of the pump.

Also remember to pack the female pilot of the P.T.O. pump flange with grease before installing the pump on the P.T.O.

Parker Hannifin Corporation
Chelsea Products Division
Olive Branch, MS 38654 USA

Suffix GF

S.A.E. Class “BB” 2 or 4 Bolt
For 1" - 15 Tooth Splined Shaft,
(*Greaseable)

Available for the following P.T.O.s:
267

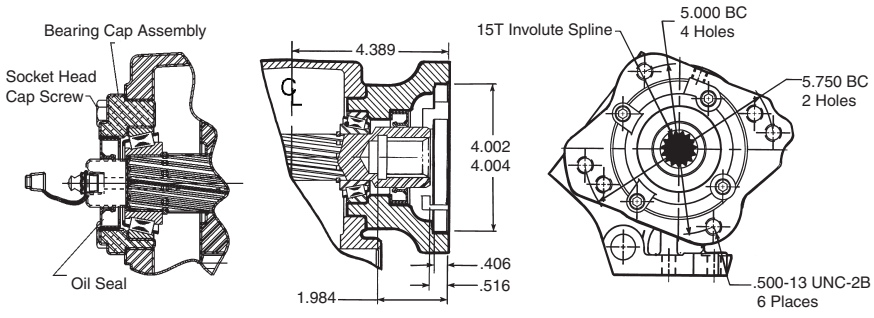

Suffix GE

S.A.E. Class “A” 2 or 4 Bolt
For 5/8" - 9 Tooth Splined Shaft,
(*Greaseable)

Available for the following P.T.O.s:
267

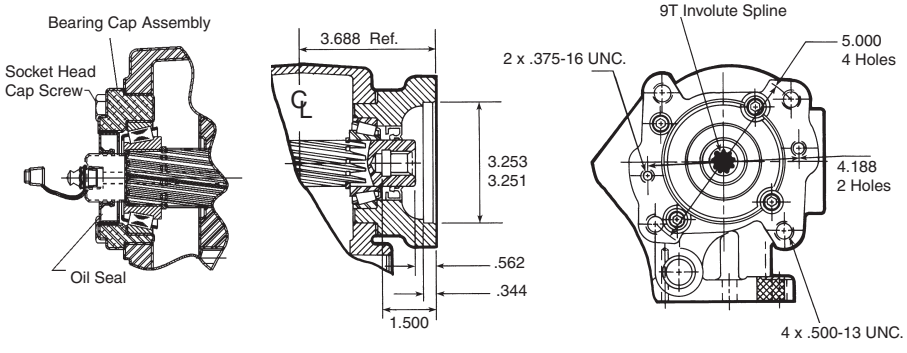

Suffix GH

S.A.E. Class “BB” 2 Bolt Rotatable
For 1" - 15 Tooth Splined Shaft,
(*Greaseable)

Available for the following P.T.O.s:
267

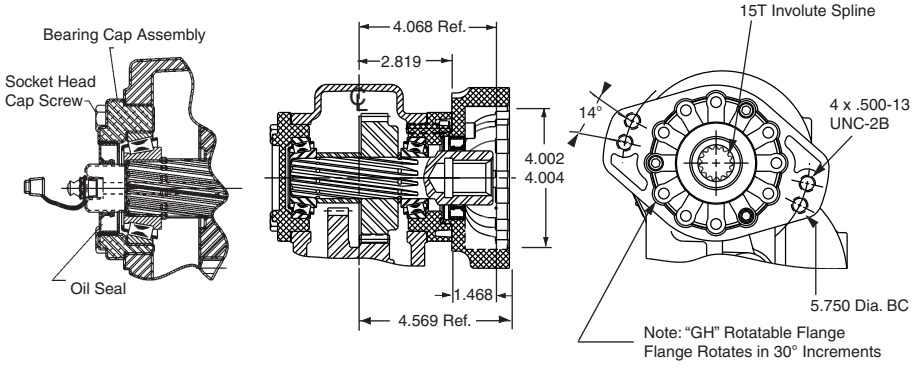

* Recommended Grease: Texaco Coupling Grease, Code 1912 or Equivalent

NOTE: PUMP INSTALLATION PRECAUTIONS
Use a bracket to support the pump to the transmission if:

- The pump weighs 40 pounds or more.
- The combined length of the P.T.O. and pump is 18 inches or more from the P.T.O. centerline to the end of the pump.

Also remember to pack the female pilot of the P.T.O. pump flange with grease before installing the pump on the P.T.O.

Suffix GJ

S.A.E. Class “B” 4 Bolt Rotatable
For 1" - 15 Tooth Splined Shaft,
(*Greaseable)

Available for the following P.T.O.s:
267

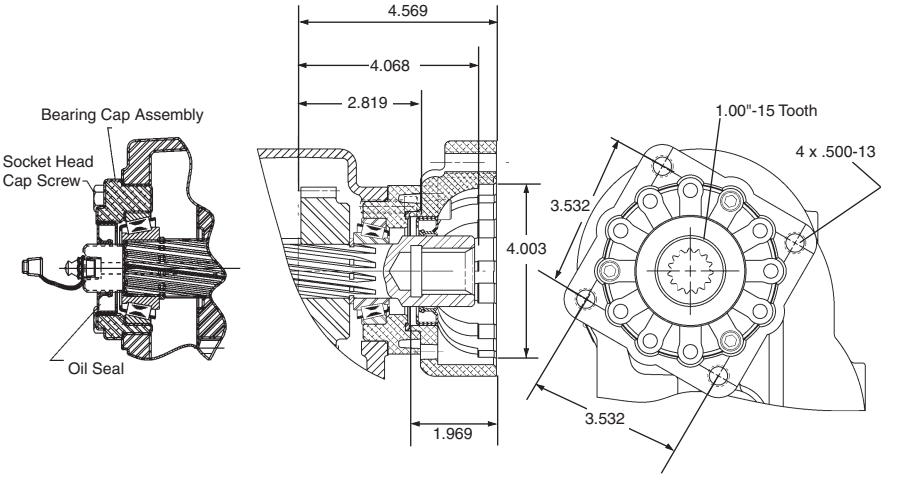

Suffix GK

S.A.E. Class “B” 2 or 4 Bolt
For 7/8" - 13 Tooth Splined Shaft,
(*Greaseable)

Available for the following P.T.O.s:
267

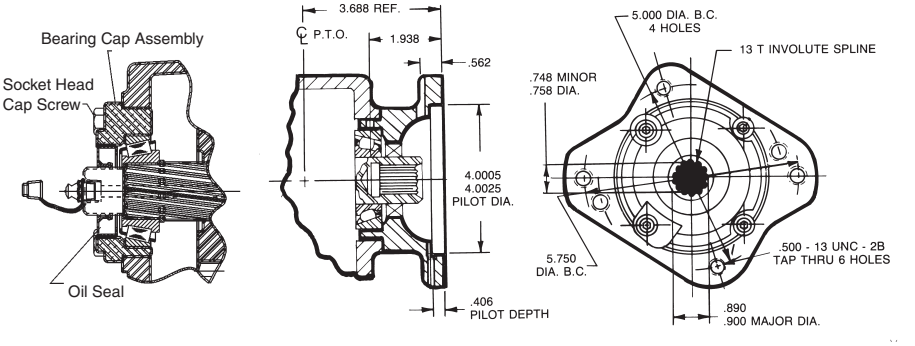

Suffix GQ

S.A.E. Class “B” 2 Bolt
For 7/8" - 15 Tooth
(*Greaseable)

Available for the following P.T.O.s:
267

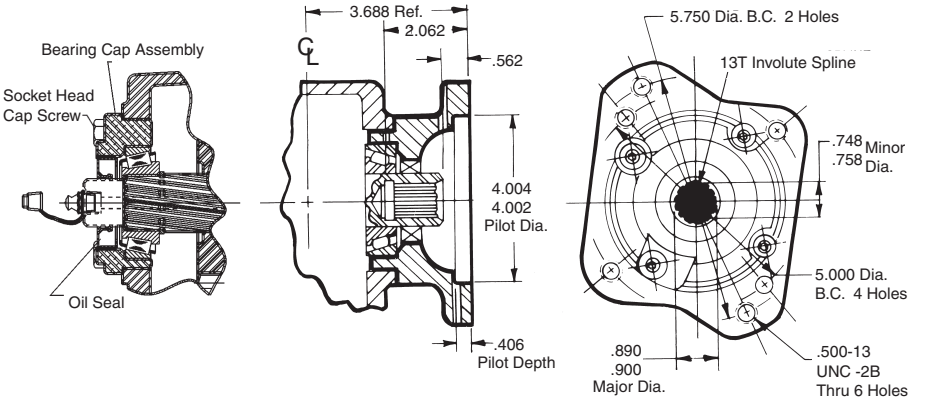

* Recommended Grease: Texaco Coupling Grease, Code 1912 or Equivalent

NOTE: PUMP INSTALLATION PRECAUTIONS
Use a bracket to support the pump to the transmission if:
- The pump weighs 40 pounds or more.
- The combined length of the P.T.O. and pump is 18 inches or more from the P.T.O. centerline to the end of the pump.

Also remember to pack the female pilot of the P.T.O. pump flange with grease before installing the pump on the P.T.O.

Suffix GR

For Chelsea Pumps
For 7/8" - 13 Tooth Splined Shaft,
(*Greaseable)

Available for the following P.T.O.s:
267

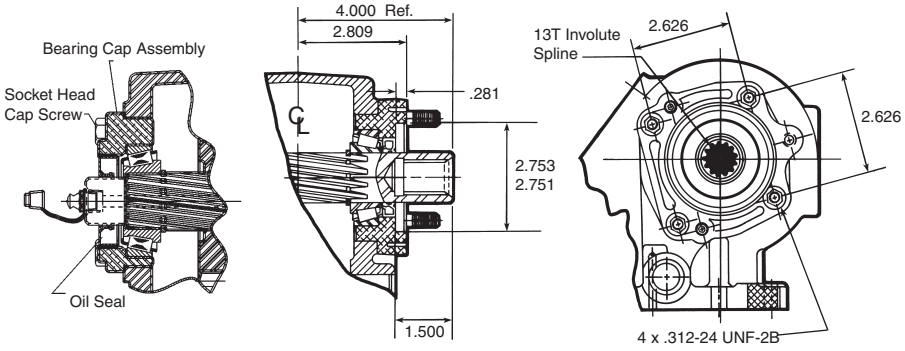

Suffix GY

DIN 5462
Pump Mounting
(*Greaseable)

Available for the following P.T.O.s:
267

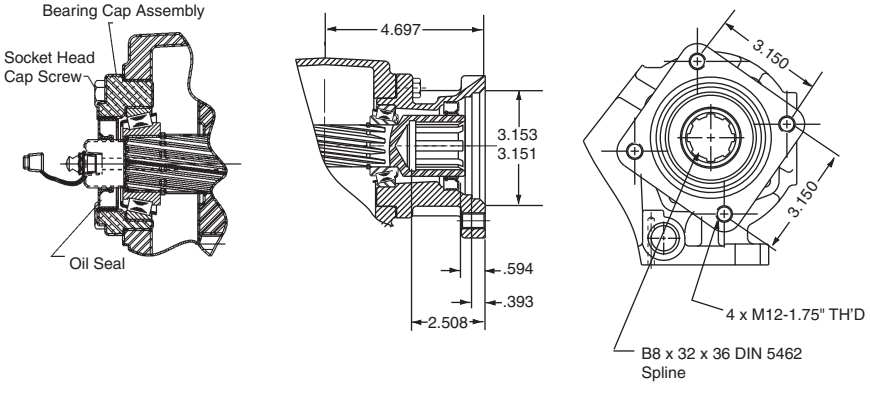

Suffix GZ

S.A.E. Class "B" 4 Bolt
For 1-1/4" - 14 Tooth Splined Shaft,
(*Greaseable)

Available for the following P.T.O.s:
267

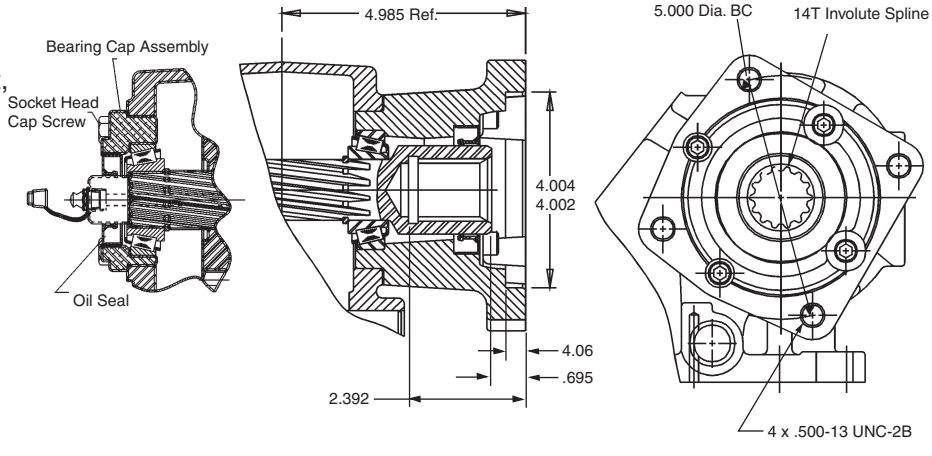

* Recommended Grease: Texaco Coupling Grease, Code 1912 or Equivalent

NOTE: PUMP INSTALLATION PRECAUTIONS
Use a bracket to support the pump to the transmission if:

- The pump weighs 40 pounds or more.
- The combined length of the P.T.O. and pump is 18 inches or more from the P.T.O. centerline to the end of the pump.

Also remember to pack the female pilot of the P.T.O. pump flange with grease before installing the pump on the P.T.O.

Suffix PA

S.A.E. Class “B” 2 Bolt Rotatable
For 7/8" - 13 Tooth Splined Shaft

Available for the following P.T.O.s:
267

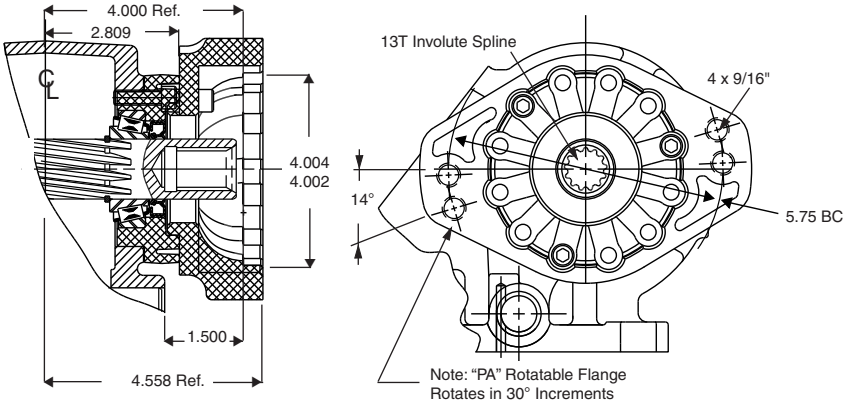

Suffix PF

S.A.E. Class “BB” 2 Bolt Rotatable
For 1" - 15 Tooth Splined Shaft

Available for the following P.T.O.s:
267

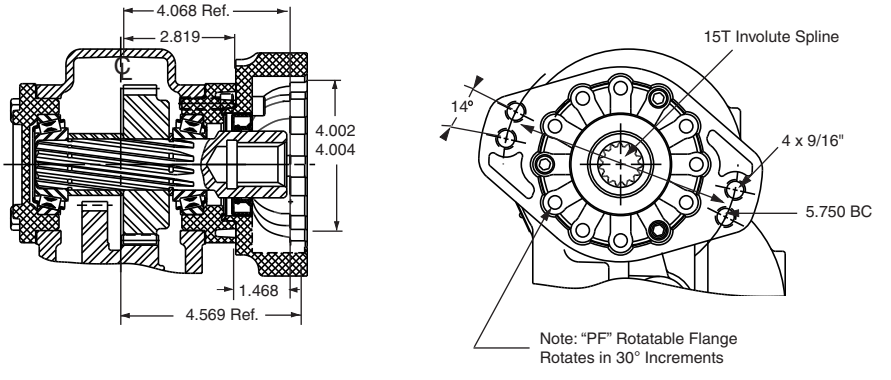

Suffix RA

S.A.E. Class “B” 2 Bolt Rotatable
For 7/8" - 13 Tooth Splined Shaft

Available for the following P.T.O.s:
267

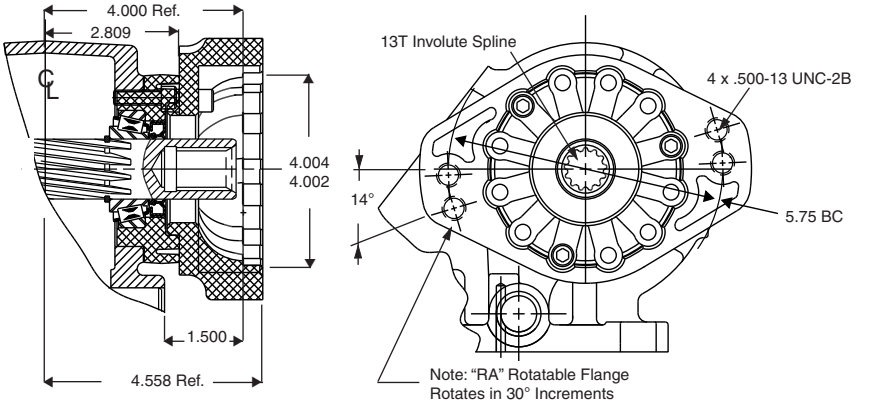

* Recommended Grease: Texaco Coupling Grease, Code 1912 or Equivalent

NOTE: PUMP INSTALLATION PRECAUTIONS
Use a bracket to support the pump to the transmission if:

- The pump weighs 40 pounds or more.
- The combined length of the P.T.O. and pump is 18 inches or more from the P.T.O. centerline to the end of the pump.

Also remember to pack the female pilot of the P.T.O. pump flange with grease before installing the pump on the P.T.O.

Suffix RB

S.A.E. Class “B” 4 Bolt Rotatable
For 7/8" - 13 Tooth Splined Shaft

Available for the following P.T.O.s:
267

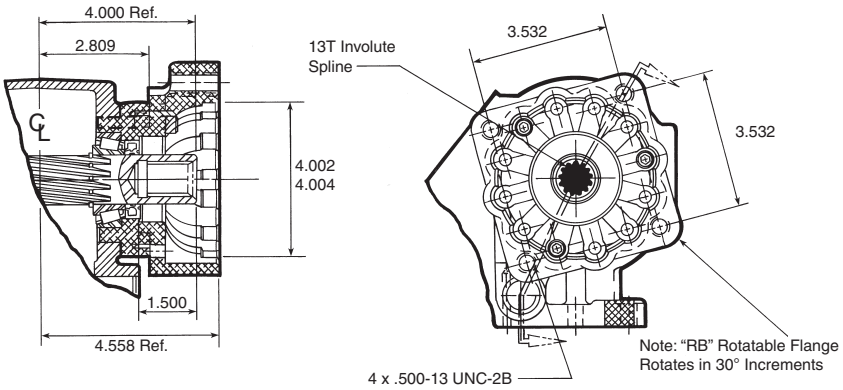

Suffix RC

S.A.E. Class “A” 2 Bolt Rotatable
For 5/8" - 9 Tooth Splined Shaft

Available for the following P.T.O.s:
267

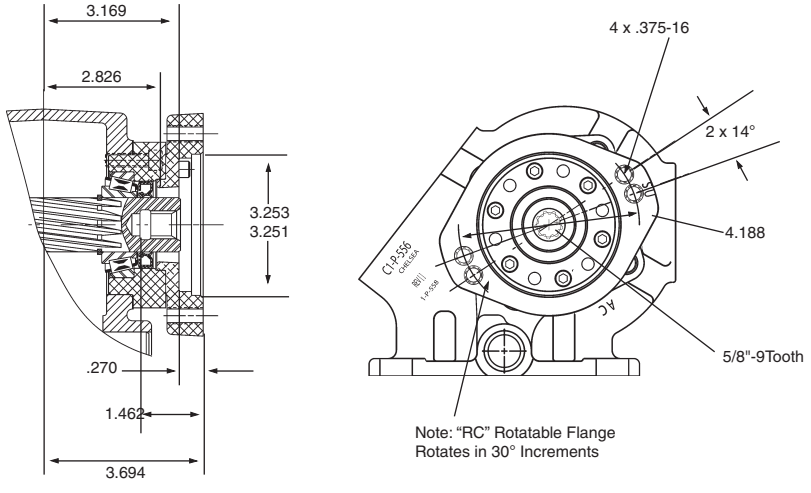

Suffix RD

S.A.E. Class “A” 2 Bolt Rotatable
For 7/8" - 13 Tooth Splined Shaft

Available for the following P.T.O.s:
267

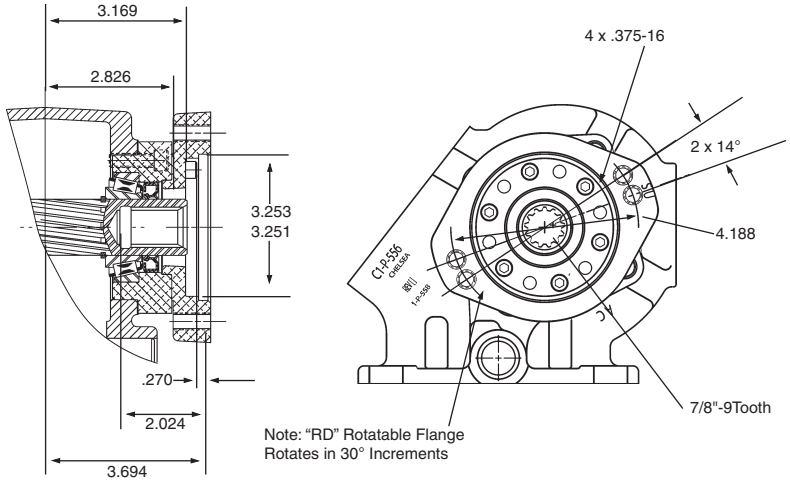

* Recommended Grease: Texaco Coupling Grease, Code 1912 or Equivalent

NOTE: PUMP INSTALLATION PRECAUTIONS
Use a bracket to support the pump to the transmission if:

- The pump weighs 40 pounds or more.
- The combined length of the P.T.O. and pump is 18 inches or more from the P.T.O. centerline to the end of the pump.

Also remember to pack the female pilot of the P.T.O. pump flange with grease before installing the pump on the P.T.O.

Parker Hannifin Corporation
Chelsea Products Division
Olive Branch, MS 38654 USA

Suffix RE

S.A.E. Class “B” 4 Bolt Rotatable
For 1.00" - 15 Tooth Splined Shaft

Available for the following P.T.O.s:
267

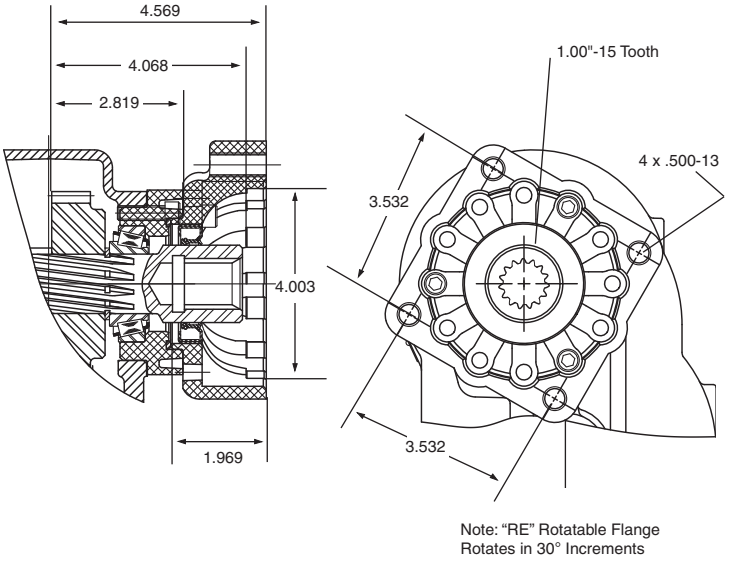

Note: “RE” Rotatable Flange
Rotates in 30° Increments

Suffix RF

S.A.E. Class “BB” 2 Bolt Rotatable
For 1" - 15 Tooth Splined Shaft

Available for the following P.T.O.s:
267

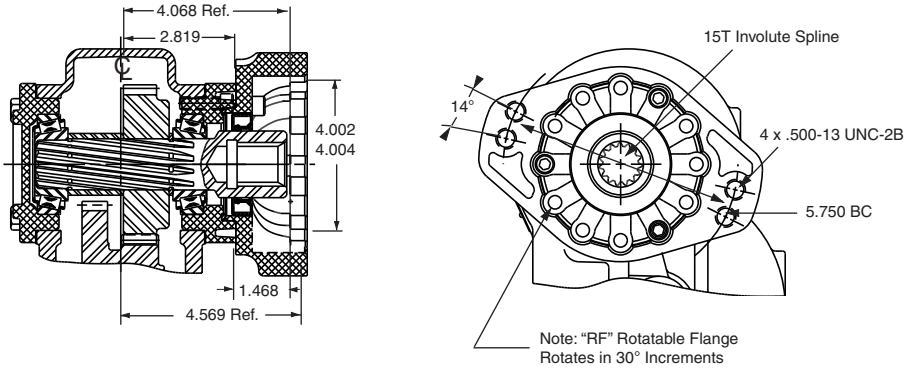

Note: “RF” Rotatable Flange
Rotates in 30° Increments

Suffix RY

DIN 5462 Pump Mounting

Available for the following P.T.O.s:
267

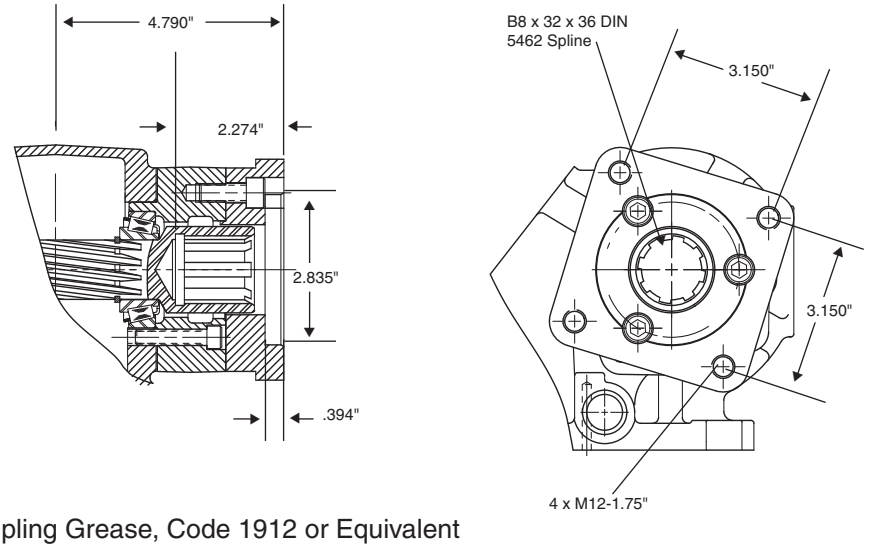

* Recommended Grease: Texaco Coupling Grease, Code 1912 or Equivalent

NOTE: PUMP INSTALLATION PRECAUTIONS
Use a bracket to support the pump to the transmission if:

- The pump weighs 40 pounds or more.
- The combined length of the P.T.O. and pump is 18 inches or more from the P.T.O. centerline to the end of the pump.

Also remember to pack the female pilot of the P.T.O. pump flange with grease before installing the pump on the P.T.O.

Parker Hannifin Corporation
Chelsea Products Division
Olive Branch, MS 38654 USA

Suffix XE

S.A.E. Class “A” 2 or 4 Bolt
For 5/8" - 9 Tooth Splined Shaft

Available for the following P.T.O.s:
267

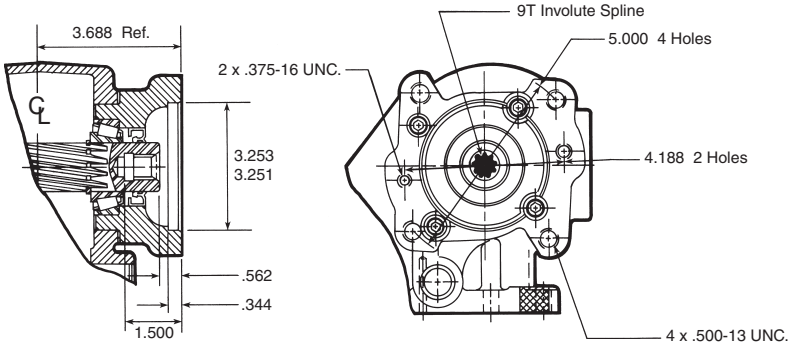

Suffix XK

S.A.E. Class “B” 2 or 4 Bolt
For 7/8" - 13 Tooth Splined Shaft

Available for the following P.T.O.s:
267

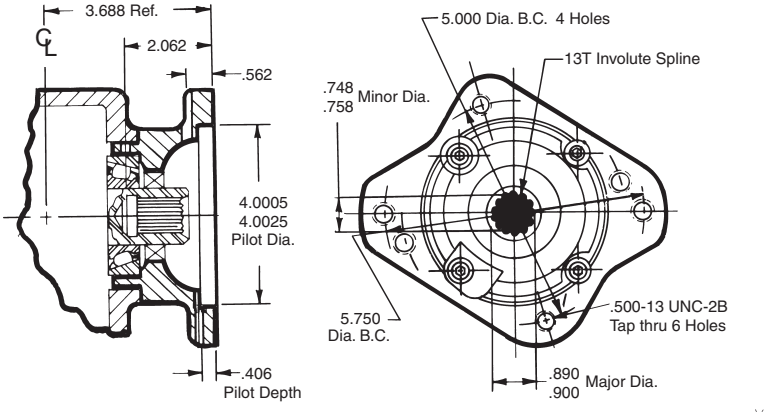

Suffix XQ

S.A.E. Class “B” 2 or 4 Bolt
For 7/8" - 13 Tooth Splined Shaft

Available for the following P.T.O.s:
267

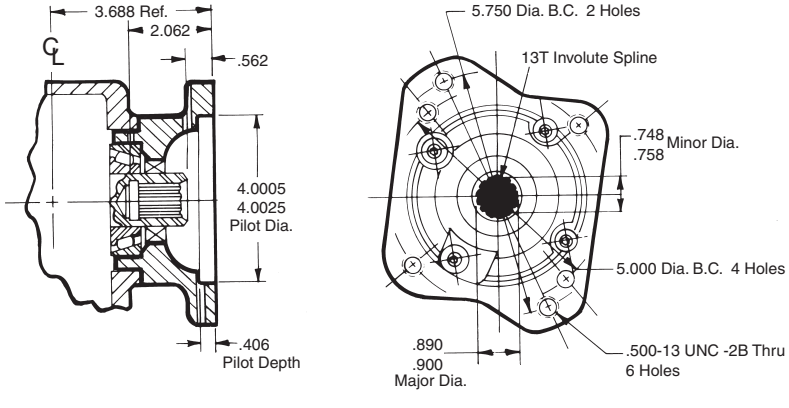

* Recommended Grease: Texaco Coupling Grease, Code 1912 or Equivalent

NOTE: PUMP INSTALLATION PRECAUTIONS
Use a bracket to support the pump to the transmission if:

- The pump weighs 40 pounds or more.
- The combined length of the P.T.O. and pump is 18 inches or more from the P.T.O. centerline to the end of the pump.

Also remember to pack the female pilot of the P.T.O. pump flange with grease before installing the pump on the P.T.O.

Suffix XR

For Chelsea Pumps
For 7/8" - 13 Tooth Splined Shaft

Available for the following P.T.O.s:
267

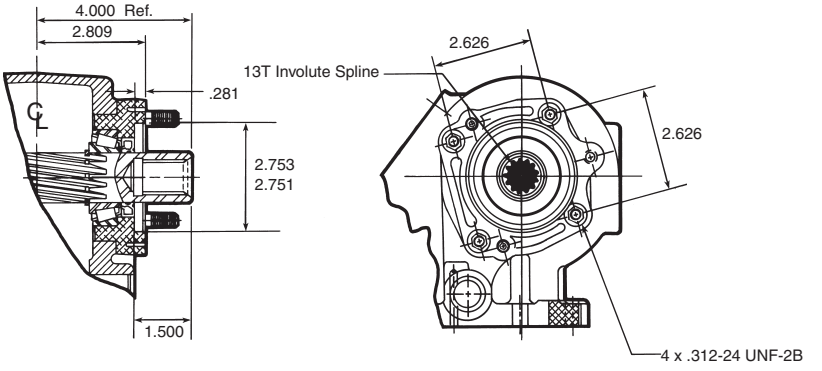

Suffix XX

1-1/4" S.A.E. Tapered Shaft w/keyway
For Companion Flange 3-1-604

Available for the following P.T.O.s:
267

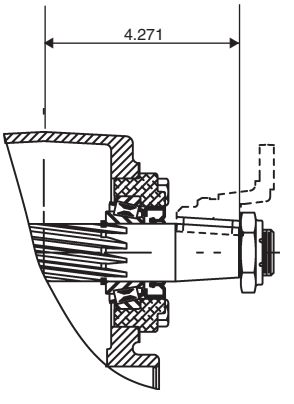

Suffix XY

DIN 5462 Pump Mounting

Available for the following P.T.O.s:
267

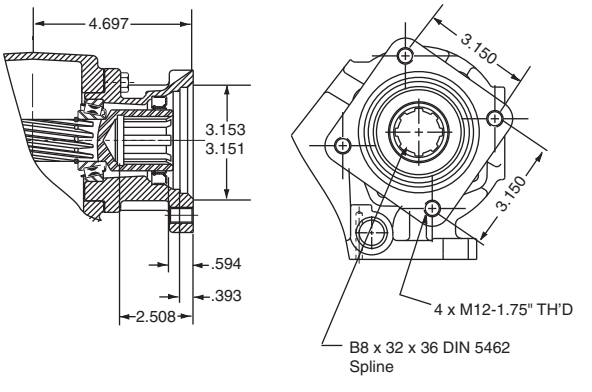

* Recommended Grease: Texaco Coupling Grease, Code 1912 or Equivalent

NOTE: PUMP INSTALLATION PRECAUTIONS
Use a bracket to support the pump to the transmission if:

- The pump weighs 40 pounds or more.
- The combined length of the P.T.O. and pump is 18 inches or more from the P.T.O. centerline to the end of the pump.

Also remember to pack the female pilot of the P.T.O. pump flange with grease before installing the pump on the P.T.O.

Suffix AF

S.A.E. Class “B” 2 or 4 Bolt
For 1.00" - 15 Tooth Splined Shaft

Available for the following P.T.O.s:
277, 278

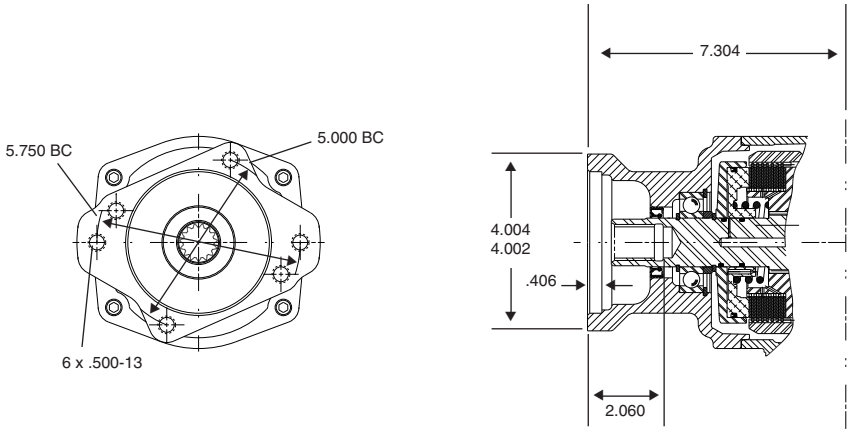

Suffix PA

S.A.E. Class “B” 2 Bolt Rotatable
For 7/8" - 13 Tooth Splined Shaft

Available for the following P.T.O.s:
277, 278

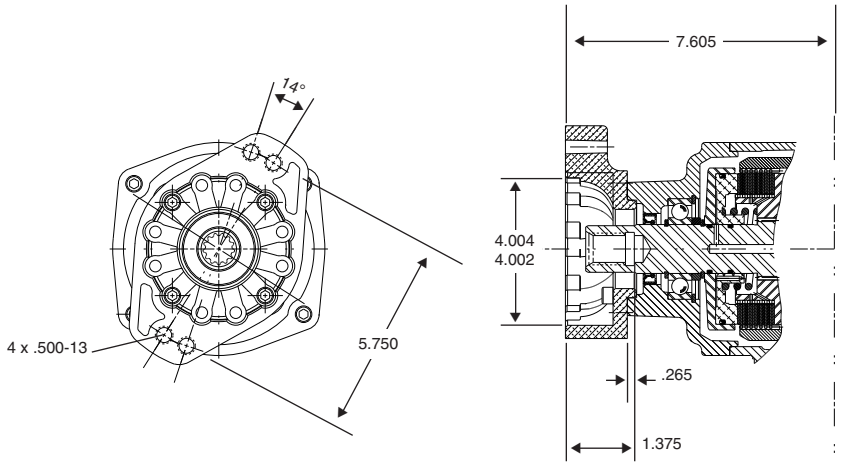

Suffix PF

S.A.E. Class “B” 2 Bolt Rotatable
For 1.00" - 15 Tooth Splined Shaft

Available for the following P.T.O.s:
277, 278

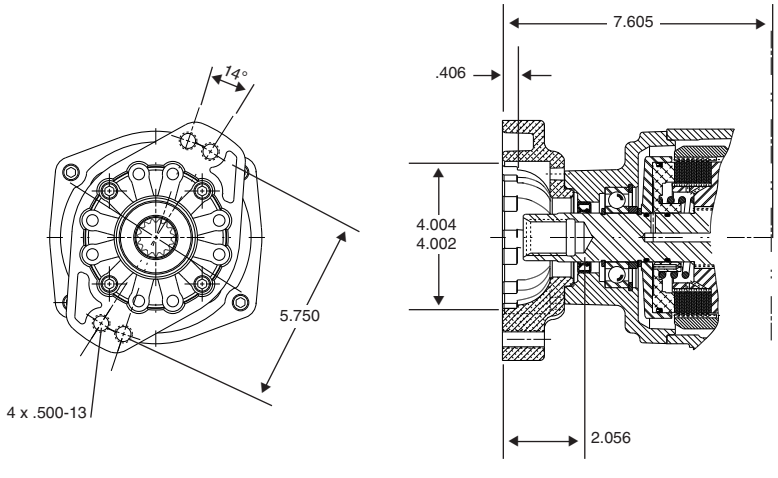

* Recommended Grease: Texaco Coupling Grease, Code 1912 or Equivalent

NOTE: PUMP INSTALLATION PRECAUTIONS
Use a bracket to support the pump to the transmission if:

- The pump weighs 40 pounds or more.
- The combined length of the P.T.O. and pump is 18 inches or more from the P.T.O. centerline to the end of the pump.

Also remember to pack the female pilot of the P.T.O. pump flange with grease before installing the pump on the P.T.O.

Suffix RA

S.A.E. Class “B” 2 Bolt Rotatable
For 7/8" - 13 Tooth Splined Shaft

Available for the following P.T.O.s:
277, 278

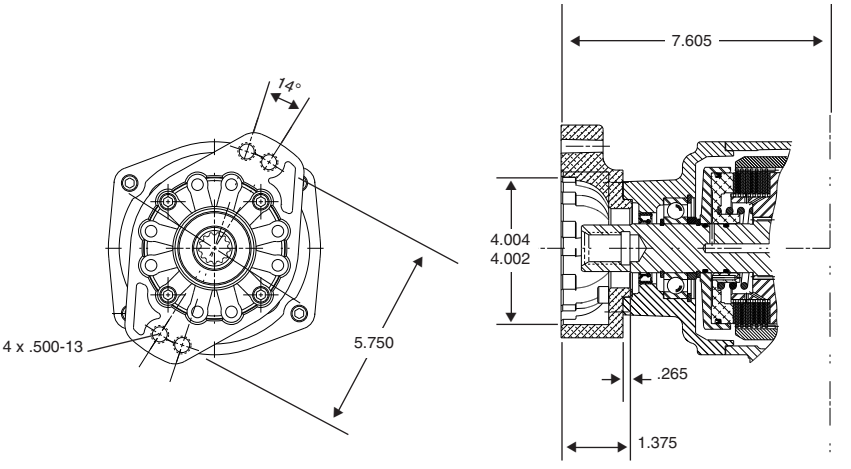

Suffix RB

S.A.E. Class “B” 4 Bolt Rotatable
For 7/8" - 13 Tooth Splined Shaft

Available for the following P.T.O.s:
277, 278

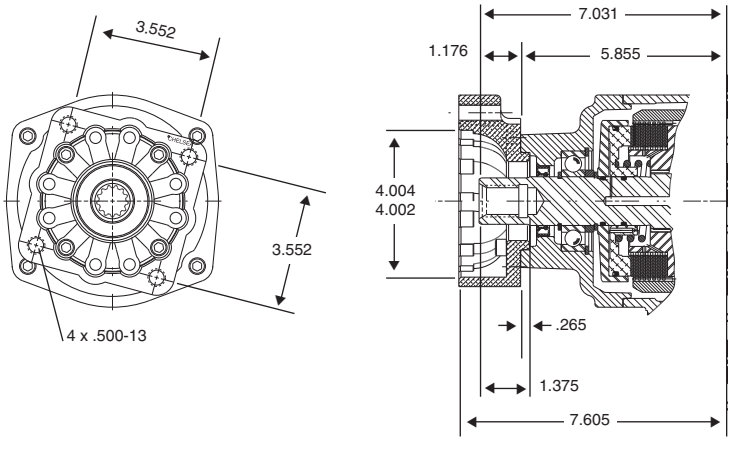

Suffix RF

S.A.E. Class “B” 2 Bolt Rotatable
For 1.00" - 15 Tooth Splined Shaft

Available for the following P.T.O.s:
277, 278

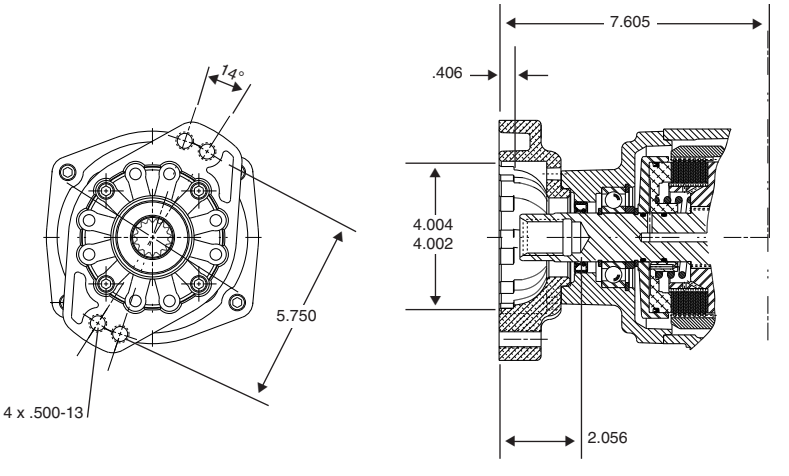

* Recommended Grease: Texaco Coupling Grease, Code 1912 or Equivalent

NOTE: PUMP INSTALLATION PRECAUTIONS
Use a bracket to support the pump to the transmission if:

- The pump weighs 40 pounds or more.
- The combined length of the P.T.O. and pump is 18 inches or more from the P.T.O. centerline to the end of the pump.

Also remember to pack the female pilot of the P.T.O. pump flange with grease before installing the pump on the P.T.O.

Suffix RG

S.A.E. Class “B” 4 Bolt Rotatable
For 1.00" - 15 Tooth Splined Shaft

Available for the following P.T.O.s:
277, 278

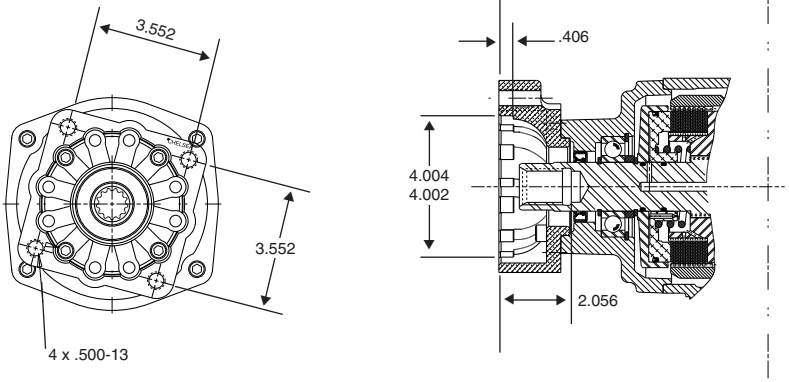

Suffix XE

S.A.E. Class “A” 2 Bolt
for 5/8" - 9 Tooth Splined Shaft

Available for the following P.T.O.s:
277, 278

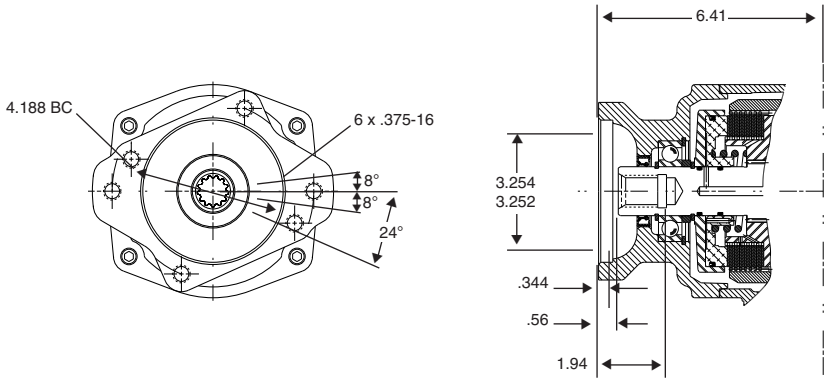

Suffix XK

S.A.E. Class “B” 2 or 4 Bolt
for 7/8" - 13 Tooth Splined Shaft

Available for the following P.T.O.s:
277, 278

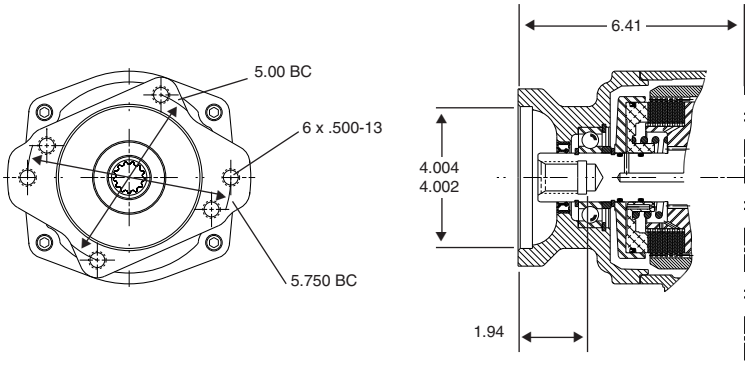

* Recommended Grease: Texaco Coupling Grease, Code 1912 or Equivalent

NOTE: PUMP INSTALLATION PRECAUTIONS
Use a bracket to support the pump to the transmission if:

- The pump weighs 40 pounds or more.
- The combined length of the P.T.O. and pump is 18 inches or more from the P.T.O. centerline to the end of the pump.

Also remember to pack the female pilot of the P.T.O. pump flange with grease before installing the pump on the P.T.O.

Suffix XP

S.A.E. Class “A” 2 Bolt
for 7/8" - 13 Tooth Splined Shaft

Available for the following P.T.O.s:
277, 278

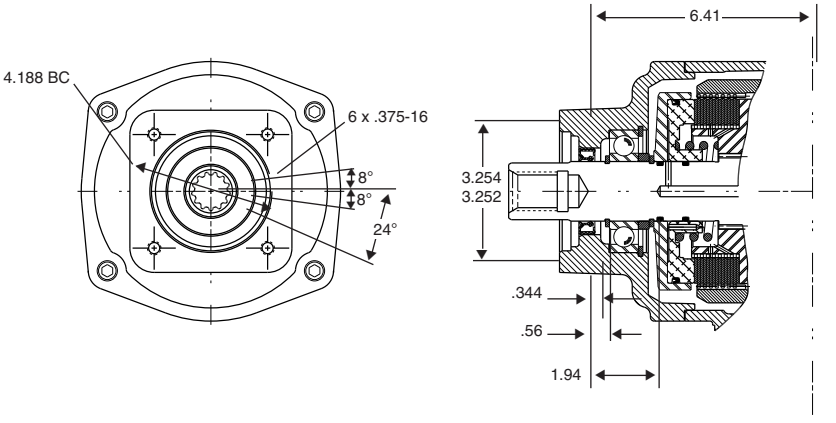

Suffix XR

Chelsea Special for
7/8" - 13 Tooth Splined Shaft

Available for the following P.T.O.s:
277, 278

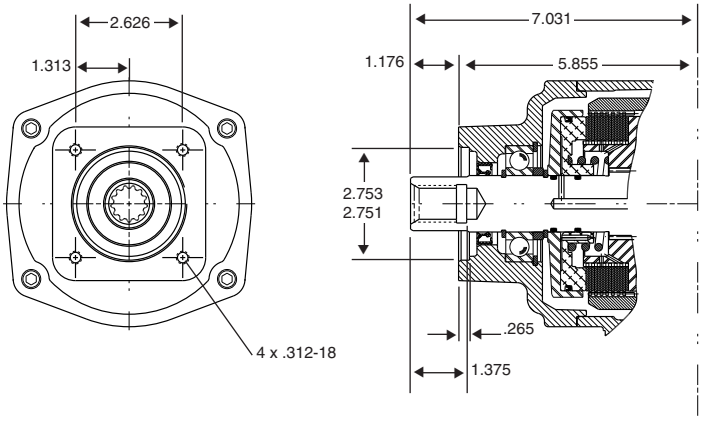

Suffix XX

DIN 100 Flange for
1.25" Tapered Shaft

Available for the following P.T.O.s:
277, 278

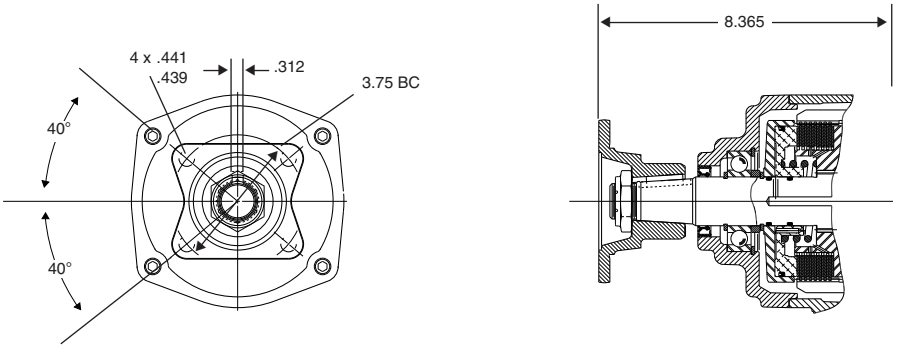

* Recommended Grease: Texaco Coupling Grease, Code 1912 or Equivalent

NOTE: PUMP INSTALLATION PRECAUTIONS
Use a bracket to support the pump to the transmission if:

- The pump weighs 40 pounds or more.
- The combined length of the P.T.O. and pump is 18 inches or more from the P.T.O. centerline to the end of the pump.

Also remember to pack the female pilot of the P.T.O. pump flange with grease before installing the pump on the P.T.O.

Suffix XY
DIN 5462 Pump Mounting for
8 Tooth Internal Spline

Available for the following P.T.O.s:
277, 278

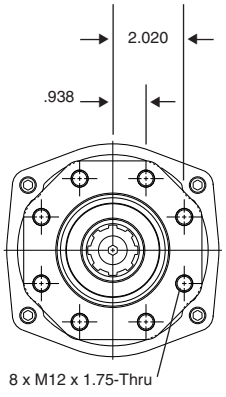

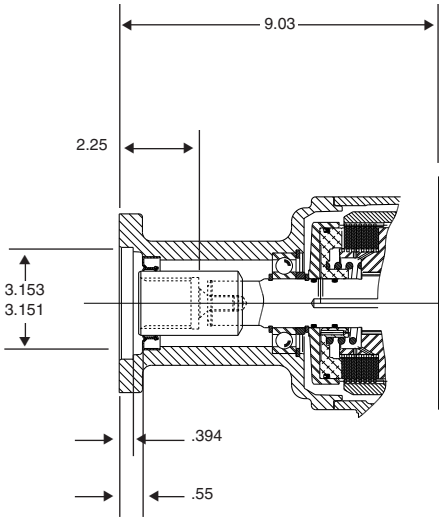

* Recommended Grease: Texaco Coupling Grease, Code 1912 or Equivalent

NOTE: PUMP INSTALLATION PRECAUTIONS
Use a bracket to support the pump to the transmission if:
- The pump weighs 40 pounds or more.
- The combined length of the P.T.O. and pump is 18 inches or more from the P.T.O. centerline to the end of the pump.

Also remember to pack the female pilot of the P.T.O. pump flange with grease before installing the pump on the P.T.O.

Suffix AB
DIN 125 Flange

Available for the following P.T.O.s:
859

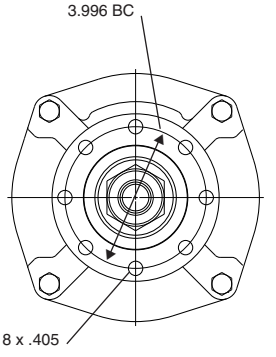

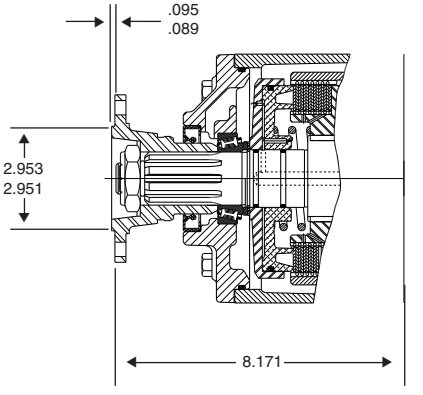

Suffix AC
DIN 100 Flange

Available for the following P.T.O.s:
859

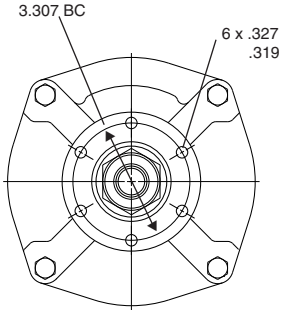

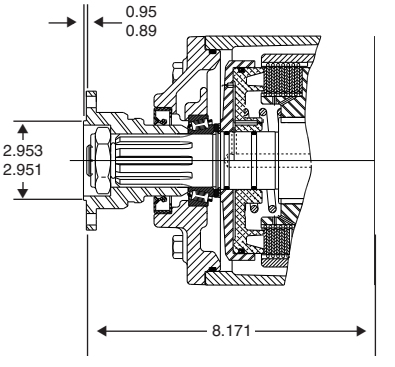

Suffix AZ
S.A.E. Class “B” 2 or 4 Bolt
for 1.25" - 14 Tooth Splined Shaft

Available for the following P.T.O.s:
859

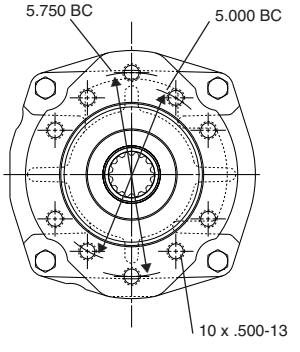

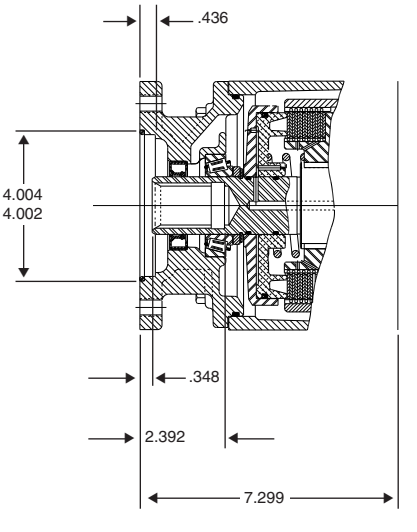

* Recommended Grease: Texaco Coupling Grease, Code 1912 or Equivalent

NOTE: PUMP INSTALLATION PRECAUTIONS
Use a bracket to support the pump to the transmission if:
- The pump weighs 40 pounds or more.
- The combined length of the P.T.O. and pump is 18 inches or more from the P.T.O. centerline to the end of the pump.

Also remember to pack the female pilot of the P.T.O. pump flange with grease before installing the pump on the P.T.O.

Suffix XS

S.A.E. Class “C” 2 or 4 Bolt Flange
for 1.25" - 14 Tooth Splined Shaft

Available for the following P.T.O.s:
859

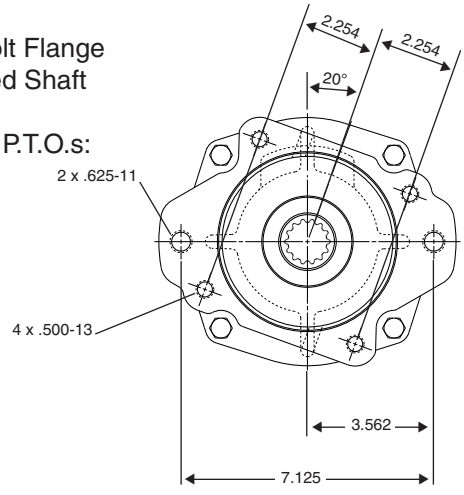

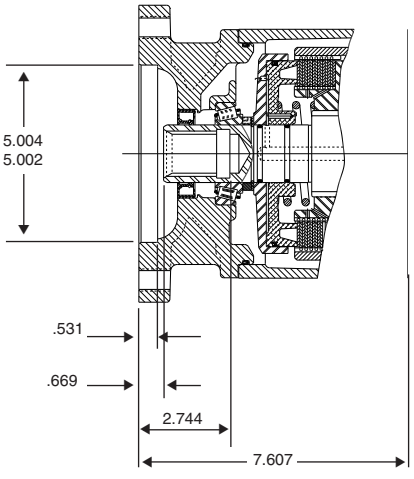

Suffix XY

DIN 5462 for 8 Tooth DIN Spline
(B8 x 32 x 36)

Available for the following P.T.O.s:
859

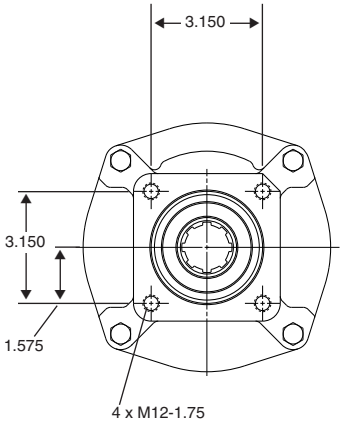

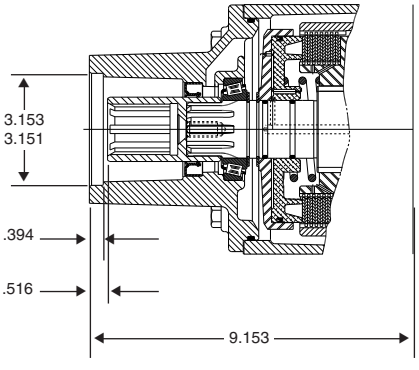

* Recommended Grease: Texaco Coupling Grease, Code 1912 or Equivalent

NOTE: PUMP INSTALLATION PRECAUTIONS
Use a bracket to support the pump to the transmission if:

- The pump weighs 40 pounds or more.
- The combined length of the P.T.O. and pump is 18 inches or more from the P.T.O. centerline to the end of the pump.

Also remember to pack the female pilot of the P.T.O. pump flange with grease before installing the pump on the P.T.O.

Suffix AB
DIN 120 Flange

Available for the following P.T.O.s:
867

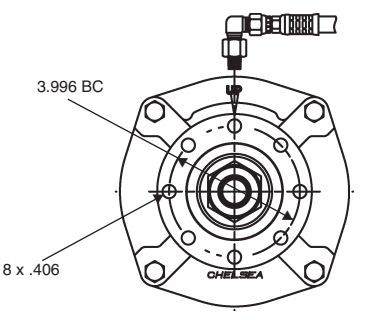

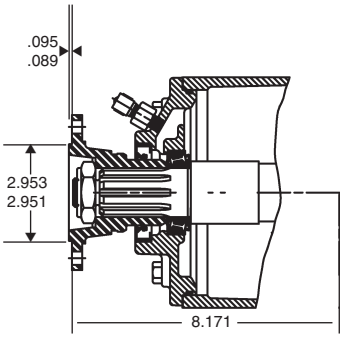

Suffix AC
DIN 100 Flange

Available for the following P.T.O.s:
867

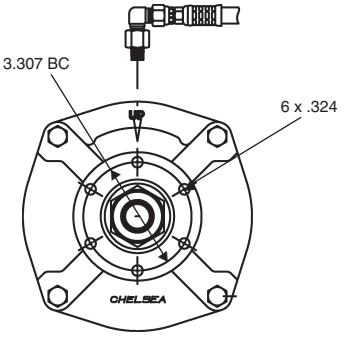

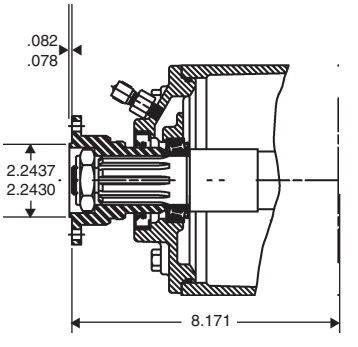

Suffix AF
S.A.E. Class “B” 2 or 4 Bolt Flange
for 1.00" - 15 Tooth

Available for the following P.T.O.s:
867

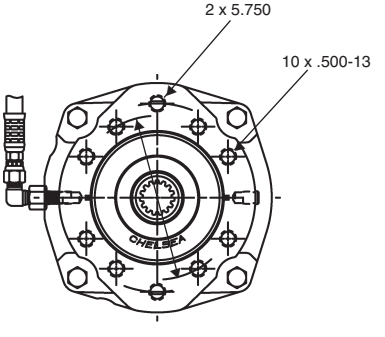

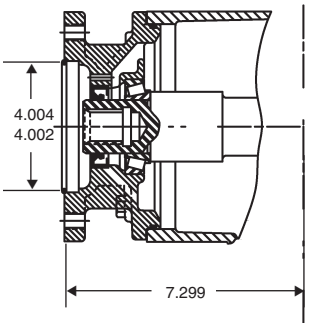

* Recommended Grease: Texaco Coupling Grease, Code 1912 or Equivalent

NOTE: PUMP INSTALLATION PRECAUTIONS
Use a bracket to support the pump to the transmission if:
- The pump weighs 40 pounds or more.
- The combined length of the P.T.O. and pump is 18 inches or more from the P.T.O. centerline to the end of the pump.

Also remember to pack the female pilot of the P.T.O. pump flange with grease before installing the pump on the P.T.O.

Suffix XS

S.A.E. Class “C” 2 or 4 Bolt Flange
for 1.25" -14 Tooth Splined Shaft

Available for the following P.T.O.s:
867

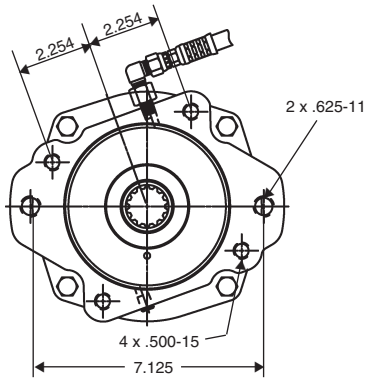

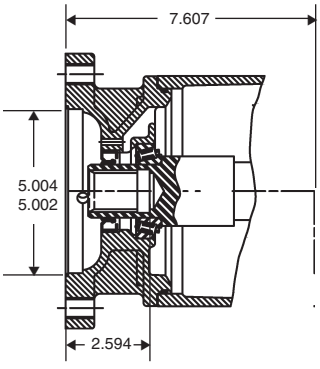

Suffix XY

DIN 5462 Pump Mounting

Available for the following P.T.O.s:
867

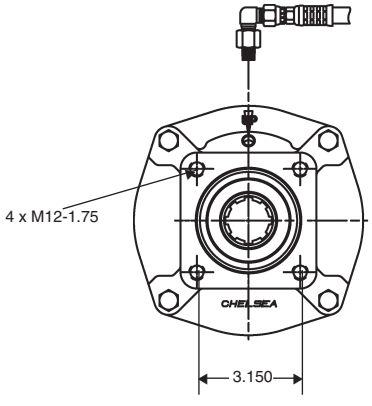

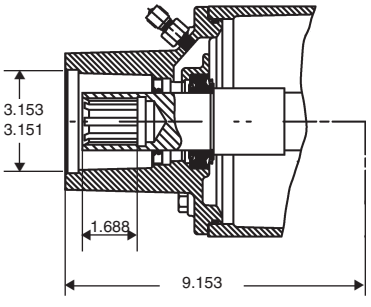

* Recommended Grease: Texaco Coupling Grease, Code 1912 or Equivalent

NOTE: PUMP INSTALLATION PRECAUTIONS
Use a bracket to support the pump to the transmission if:

- The pump weighs 40 pounds or more.
- The combined length of the P.T.O. and pump is 18 inches or more from the P.T.O. centerline to the end of the pump.

Also remember to pack the female pilot of the P.T.O. pump flange with grease before installing the pump on the P.T.O.

Ford Transmission

P.T.O. Options Chart – Ford Transmission

P.T.O. Series			246
Lubrication			
P	Pressure Lube		x
Shifting			
B	12 Volt Electric/Hydraulic		x
K	12 Volt Electric Overspeed Control		x
Output			
AD	S.A.E. “A” 2 Bolt Flange w/ 3/4" 11 - Tooth Splined		x
XD	1.25" Dia. Keyed Shaft		x
XE	S.A.E. “A” 2 Bolt Flange w/ 5/8" 9 - Tooth Splined		x
XP	S.A.E. “A” 2 Bolt Flange w/ 7/8" 13 - Tooth Splined		x
Pumps			
16	Hyd. Pump 2.9 GPM @1200 R.P.M.	w/ 3/4" 11 - Tooth Spline	x
26	Hyd. Pump 4.9 GPM @1200 R.P.M.	w/ 3/4" 11 - Tooth Spline	x
32	Hyd. Pump 5.8 GPM @1200 R.P.M.	w/ 3/4" 11 - Tooth Spline	x
37	Hyd. Pump 6.8 GPM @1200 R.P.M.	w/ 3/4" 11 - Tooth Spline	x
42	Hyd. Pump 7.8 GPM @1200 R.P.M.	w/ 3/4" 11 - Tooth Spline	x
55	Hyd. Pump 10.3 GPM @1200 R.P.M.	w/ 3/4" 11 - Tooth Spline	x
61	Hyd. Pump 11.3 GPM @1200 R.P.M.	w/ 3/4" 11 - Tooth Spline	x
71	Hyd. Pump 13.2 GPM @1200 R.P.M.	w/ 3/4" 11 - Tooth Spline	x
82	Hyd. Pump 15.1 GPM @1200 R.P.M.	w/ 3/4" 11 - Tooth Spline	x
50	Hyd. Pump 9.3 GPM @1200 R.P.M.	w/ 7/8" 13 - Tooth Spline (4 x 2 Only)	x
66	Hyd. Pump 12.2 GPM @1200 R.P.M.	w/ 7/8" 13 - Tooth Spline (4 x 2 Only)	x
87	Hyd. Pump 16.1 GPM @1200 R.P.M.	w/ 7/8" 13 - Tooth Spline (4 x 2 Only)	x
10	Hyd. Pump 18.6 GPM @1200 R.P.M.	w/ 7/8" 13 - Tooth Spline (4 x 2 Only)	x
14	Hyd. Pump 25.4 GPM @1200 R.P.M.	w/ 7/8" 13 - Tooth Spline (4 x 2 Only)	x
18	Hyd. Pump 28.1 GPM @1200 R.P.M.	w/ 7/8" 13 - Tooth Spline (4 x 2 Only)	x
20	Hyd. Pump 31.2 GPM @1200 R.P.M.	w/ 7/8" 13 - Tooth Spline (4 x 2 Only)	x

NOTE: Always Check Price Book for Current Options

Rear Mount P.T.O.s

P.T.O. Options Chart – Rear Mount P.T.O.s

P.T.O. Series		522	541	CAT-H	CAT-D
Mounting Designator					
AA	ZF 6S-850	x			
AB	Iveco 2845.6	x			
AC	ZF/Meritor Freedomliner Astronic	x			
AD	ZF 16S151/181/221	x			
AM	Eaton FS-4106	x			
AT	Fuller		x		
AU	Fuller		x		
BD	Fuller		x		
BJ	Fuller		x		
LA	Caterpillar CX Series			x	x
Lubrication					
X	Standard	x	x	x	x
W	Wet Spline			x	x
Shifting					
A	Air	x	x		
B	12 Volt Elec/Hyd			x	
D	24 Volt Elec/Hyd			x	
F	ZMTEC Installation, “AC” Input Gear (Freedomline Transmissions)	x			
H	Less Shifter Kit	x			
M	Constant Mesh				x
P	12 Volt Elec/Air	x			
Q	24 Volt Elec/Air	x			
V	Air, Less Installation Kit	x			
Y	Lever		x		
Output					
AF	S.A.E. “B” 2 or 4 Bolt Flange, 1.00" 15 - Tooth Shaft			x (w)	x (w)
AZ	S.A.E. “B” 2 or 4 Bolt Flange, 1.25" 14 - Tooth Shaft			x (w)	x (w)
XD	1-1/4" Round Shaft w/keyway	x		x	
XK	S.A.E. “B” 2 or 4 Bolt Flange, 7/8" 13 - Tooth Shaft		x	x (w)	x (w)
XS	S.A.E. “C” 2 or 4 Bolt Flange, 1.25" - 14Tooth Shaft				x (w)
XV	1-1/2" 10 Spline w/1410 Series Flange		x		x (w)
XX	1-1/4" S.A.E. Tapered Shaft w/keyway	x			
XY	DIN 5462 Pump Mounting	x		x (w)	x (w)

* Order companion flange (3-1-604) separately

(w) = Also Available as a Wet Spline “W” Option

NOTE: Always Check Price Book for Current Options

Parker Hannifin Corporation
Chelsea Products Division
Olive Branch, MS 38654 USA

XD Output

Available for the following P.T.O.s:

522

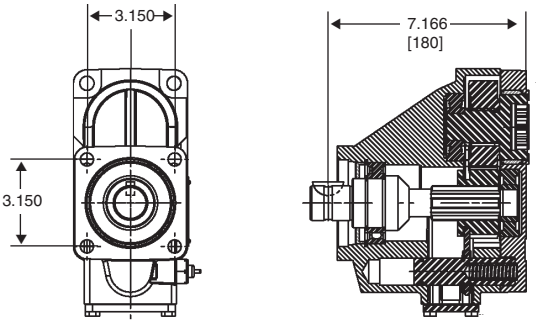

XX Output

Available for the following P.T.O.s:

522

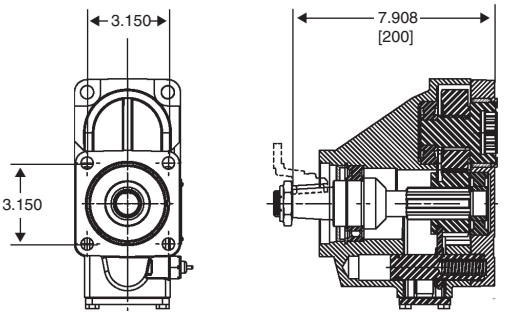

XY Output

Available for the following P.T.O.s:

522

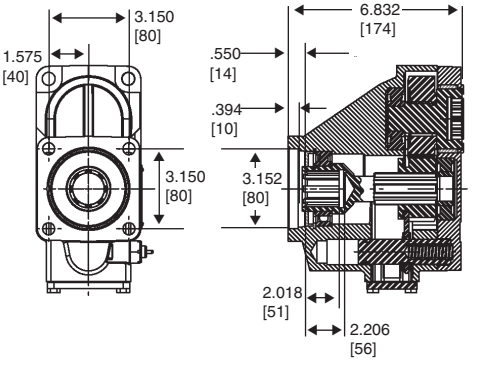

* Recommended Grease: Texaco Coupling Grease, Code 1912 or Equivalent

NOTE: PUMP INSTALLATION PRECAUTIONS

Use a bracket to support the pump to the transmission if:

- The pump weighs 40 pounds or more.
- The combined length of the P.T.O. and pump is 18 inches or more from the P.T.O. centerline to the end of the pump.

Also remember to pack the female pilot of the P.T.O. pump flange with grease before installing the pump on the P.T.O.

AF Output

Available for the following P.T.O.s:
CAT-D

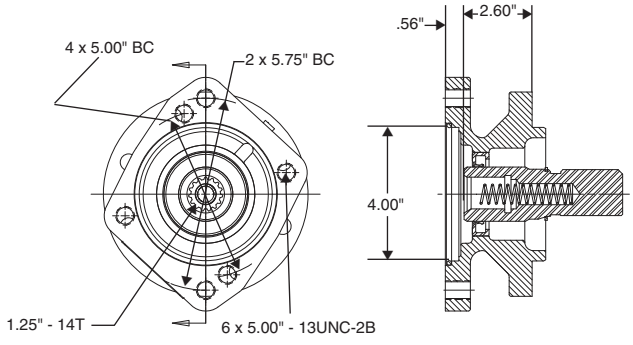

AZ Output

Available for the following P.T.O.s:
CAT-D

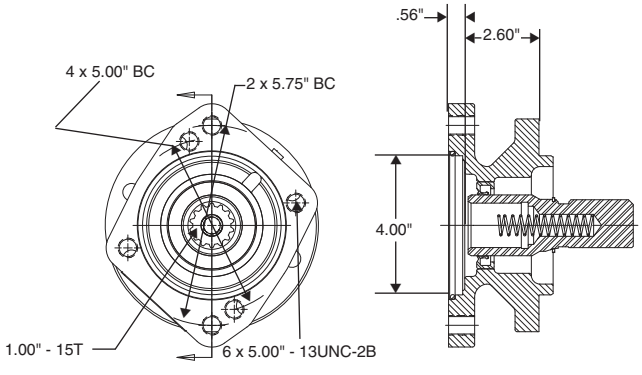

XK Output

Available for the following P.T.O.s:
CAT-D

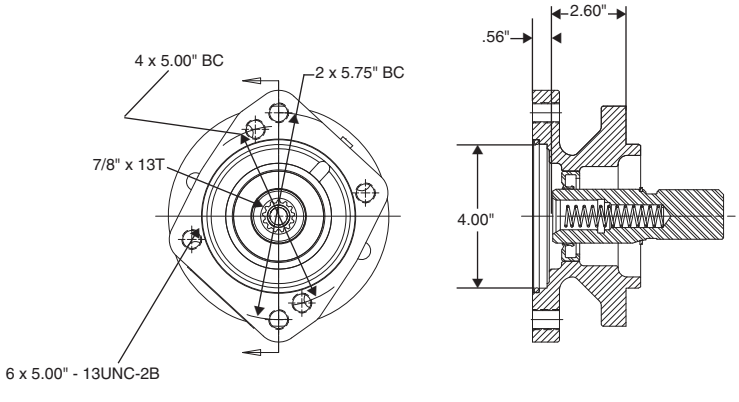

XS Output

Available for the following P.T.O.s:
CAT-D

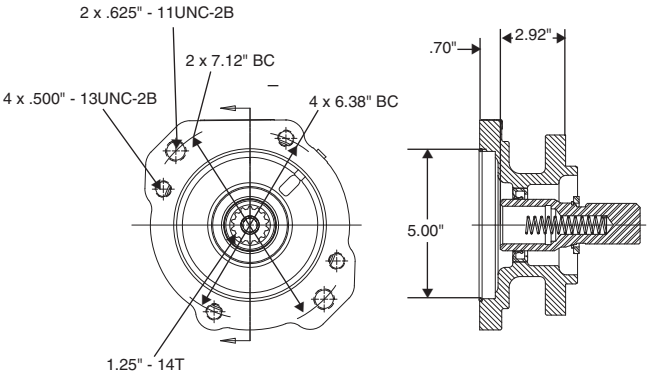

XV Output

Available for the following P.T.O.s:
CAT-D

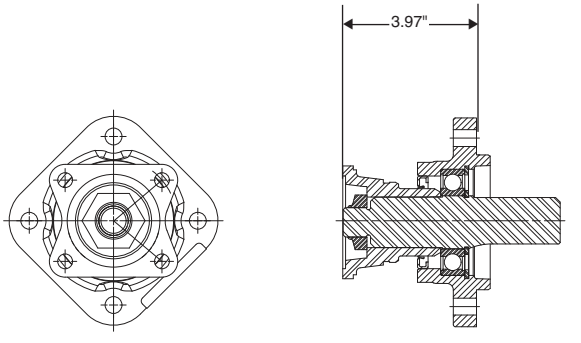

XY Output

Available for the following P.T.O.s:
CAT-D

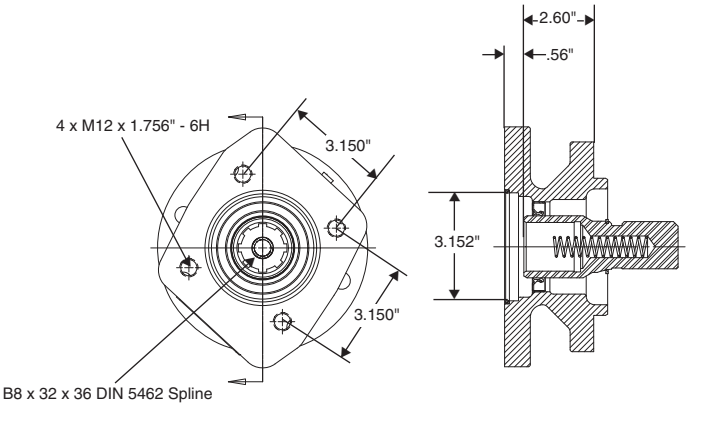

Parker Hannifin Corporation
Chelsea Products Division
Olive Branch, MS 38654 USA

AF Output

Available for the following P.T.O.s:
CAT-H

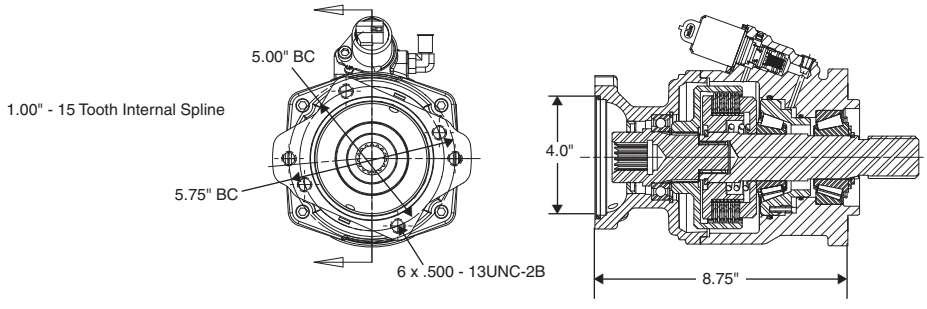

AZ Output

Available for the following P.T.O.s:
CAT-H

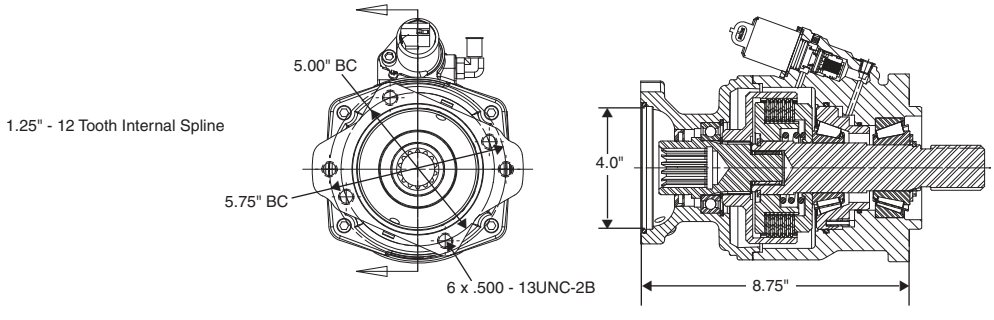

XK Output

Available for the following P.T.O.s:
CAT-H

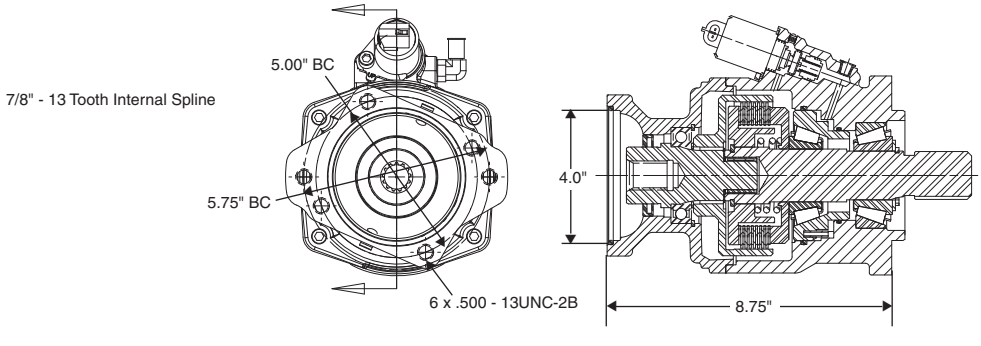

Parker Hannifin Corporation
Chelsea Products Division
Olive Branch, MS 38654 USA

XY Output

Available for the following P.T.O.s:

CAT-H

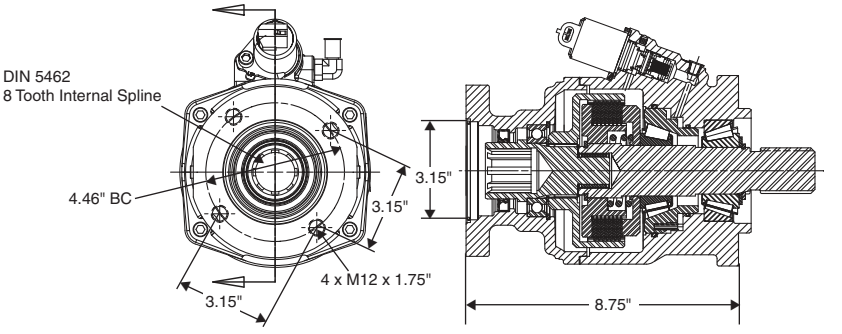

Parker Hannifin Corporation
Chelsea Products Division
Olive Branch, MS 38654 USA

Dual Output Shaft P.T.O.s

P.T.O. Options Chart – Dual Output Shaft P.T.O.s

P.T.O. Series		452
Lubrication		
X	Standard	x
Shifting		
W	Single Shift Wire Control	x
Output		
DD	1-1/4" Round Dual Shafts	x

NOTE: Always Check Price Book for Current Options

Reversible P.T.O.s

P.T.O. Options Chart – Reversible P.T.O.s

P.T.O. Series		340	352	863
Lubrication				
X	Standard	x	x	x
P	Pressure			x
Shifting				
A	Air	x	x	
C	Heavy Duty Bracket Less Cable			
G	Air Shift w/cyl. Location Opposite of Output	x	x	
V	“A” Shift, Less Installation Kit	x		
W	Wire		x	
X	Less Cable and Knob			
Y	Lever		x	x
Output				
LG	1-1/2" 10 Spline w/1410 & Self Lube			x
XD	1-1/4" Round Shaft	x	x	
XV	1-1/2" 10 Spline w/1410 Series Flange			x

NOTE: Always Check Price Book for Current Options

Asia Pacific P.T.O.s

P.T.O. Options Chart – Asia Pacific P.T.O.s

P.T.O. Series		429	435
Lubrication			
X	Standard	x	x
Shifting			
A	Air	x	x
P	Electric/Air 12V	x	
W	Wire		x
Output			
AZ	Non Standard Flange, “C” Shaft (1-1/4" 14 - Tooth)		x
GA	Rotatable “B” 2 Bolt Flange, “B” Shaft (7/8" 13 - Tooth) (Greaseable)		x
GB	Rotatable “B” 4 Bolt Flange, “B” Shaft (7/8" 13 - Tooth) (Greaseable)		x
GH	Rotatable “B” 2 Bolt Flange, “BB” Shaft (1.00" 15 - Tooth) (Greaseable)		x
GJ	Rotatable “B” 4 Bolt Flange, “BB” Shaft (1.00" 15 - Tooth) (Greaseable)		x
GQ*	S.A.E. “B” 2 or 4 Bolt Flange, “B” Shaft (7/8" 13 - Tooth) (Greaseable)		x
GR	Chelsea Special Pump Mount, “B” Shaft (7/8" 13 - Tooth) (Greaseable)		x
RA	Rotatable “B” 2 Bolt Flange, “B” Shaft (7/8" 13 - Tooth)	x	x
RB	Rotatable “B” 4 Bolt Flange, “B” Shaft (7/8" 13 - Tooth)	x	x
RE	Rotatable “B” 4 Bolt Flange, “BB” Shaft (1.00" 15 - Tooth)	x	x
RF	Rotatable “B” 2 Bolt Flange, “BB” Shaft (1.00" 15 - Tooth)	x	x
XD	1-1/4" Round Shaft	x	x
XE	S.A.E. “A” 2 or 4 Bolt Flange, “A” Shaft (5/8" 9 - Tooth)	x	
XQ*	S.A.E. “B” 2 or 4 Bolt Flange, “B” Shaft (7/8" 13 - Tooth)	x	x
XR	1-1/2" 10 Spline w/1410 Ser. Flange	x	x

*XQ/GQ same as XK/GK except flange rotated 90°

NOTE: See Pages 2.5 thru 2.15 for flange dimensions

NOTE: Always Check Price Book for Current Options

Parker Hannifin Corporation
Chelsea Products Division
Olive Branch, MS 38654 USA

Pump Flange Field Conversion Kits

Pump Suffix	Kit No. Suffix	Kit Number	Flange Type	Shaft Type
AF	XD to AF	328591-30X	S.A.E. “BB” 2 or 4 Bolt	1.00" 15 - Tooth Splined
AK	XD to AK	328591-28X	S.A.E. “B” 2 Bolt	7/8" 13 - Tooth Splined
GA	XD to GA XR to GA RA to GA	328591-72X 328591-73X 328591-106X	S.A.E. “B” 2 Bolt	*7/8" 13 - Tooth Internal Spline
GB	XD to GB XR to GB RB to GB	328591-74X 328591-75X 328591-107X	S.A.E. “B” 4 Bolt	*7/8" 13 - Tooth Internal Spline
GH	XD to GH RF to GH	328591-116X 328591-114X	S.A.E. “BB” 2 Bolt Rotatable	*1.00" 15 - Tooth Internal Spline
GJ	XD to GJ RE to GJ	328591-138X 328591-114X	S.A.E. “B” 4 Bolt Rotatable	*1.00" 15 - Tooth Splined
GQ	XD to GQ XQ to GQ	328591-91X 328591-86X	S.A.E. “B” 2 or 4 Bolt	*7/8" 13 - Tooth Internal Spline
GR	XD to GR	328591-76X	CHELSEA SPECIAL 4 Bolt	*7/8" 13 - Tooth Internal Spline
RA	XD to RA XR to RA	328591-55X 328591-53X	S.A.E. “B” 2 Bolt Rotatable	7/8" 13 - Tooth Internal Spline
RB	XD to RB XR to RB	328591-56X 328591-54X	S.A.E. “B” 4 Bolt Rotatable	7/8" 13 - Tooth Internal Spline
RE	XD to RE	328591-134X	S.A.E. “B” 4 Bolt Rotatable	1.00" 15 - Tooth Splined
RF	XD to RF	328591-45X	S.A.E. “BB” 2 Bolt Rotatable	1.00" 15 - Tooth Splined
XE	XD to XE	328591-27X	S.A.E. “A” 2 or 4 Bolt	5/8" 9 - Tooth Splined
XQ	XD to XQ	328591-17X	S.A.E. “B” 2 or 4 Bolt	7/8" 13 - Tooth Splined
XR	XD to XR	328591-52X	CHELSEA SPECIAL	7/8" 13 - Tooth Splined

*Grease fitting on end of shaft

Field Conversion Kits

Series/ Application	Assembly Arrang.	Wire To Air	Lever To Air	Wire to Elec. over Air	
				12 Volt	24 Volt
435	3&6			328390-119X	328390-120X

Cover Assemblies

Series/ Application	Assembly Arrangement	Wire Control	Air Control
429	5	329121-2X w/ 5-A-188	329361X
435	3 & 6	329038-1X	329361X

Shifter Installation Kits

Series/ Application	Wire Control	Air Control	Electric Over Air 12 Volt
429		328388-37X	328388-47X
435	328380X	328388-37X	

Parker Hannifin Corporation
Chelsea Products Division
Olive Branch, MS 38654 USA

Specification Charts

Specifications Chart – 901 Series

Standard Output Shaft Size	—1-3/4" 10 Spline —
Intermittent Torque Rating (Lbs. ft)	500
Intermittent Torque Rating (N.m.)	678
Horsepower Rating for Intermittent Service	
At 500 R.P.M. of the Output Shaft (HP)	48
At 1000 R.P.M. of the Output Shaft (HP)	95
At 500 R.P.M. of the Output Shaft (Kw)	36
At 1000 R.P.M. of the Output Shaft (Kw)	71
Approximate Weight:	— 185 lbs. [84 kg] —

Specifications Chart – 912 Series

Standard Output Shaft Size	— 2-3/4" 10 Spline —	
Max Thru Torque Capacity	Lbs. ft	Nm
w/ Diesel Engine		
Automatic Transmission	13,000	17,625
Manual Transmission	12,000	16,270
w/ Gas Engine		
Automatic Transmission	16,000	21,693
Manual Transmission	15,000	20,337
Approximate Weight:	—130 lbs. [59 kg]—	

Specifications Chart – 941 Series

Standard Output Shaft Size	—1-1/2" 12 Spline —	
Max Thru Torque Capacity	Lbs. ft	Nm
w/ Diesel Engine		
Automatic Transmission	3,100	4,203
Manual Transmission	2,900	3,932
w/ Gas Engine		
Automatic Transmission	4,200	5,694
Manual Transmission	3,900	5,288
Approximate Weight:	—60 lbs. [27 kg] —	

Split Shafts

P.T.O. Options Chart - Split Shaft P.T.O.s

P.T.O. Series		901	912	941
Shifting				
A	Air	x	x	x
Y	Lever	x	x	x
Input-Output Shaft				
C	1-3/4" 10 Spline	x		
G	2-3/4" Shaft w/1710 1/2 Rd. Yoke		x	
H	2-3/4" Shaft w/1810 1/2 Rd. Yoke		x	
J	Without Flanges		x	x
K	1410 Series Flange			x
L	1550 Series Flange			x
M	2-3/4" Shaft w/ 1610 companion flange		x	
P	Output shaft for Spicer 170-4-521-1X		x	
S	Output shaft for Spicer 250-4-241-1X		x	
P.T.O. Output Shaft				
XV	1-1/2" 10 Spline	x		
XK	S.A.E. “B” 2 or 4 Bolt	x		
XS	S.A.E. “C” 4 Bolt	x		
XU	S.A.E. “C” 2 Bolt	x		
XX	No P.T.O. Shaft			x
XX	2 - 8-Bolt P.T.O. openings with air shift or 3 - 8-Bolt opening		x	

Parker Hannifin Corporation
Chelsea Products Division
Olive Branch, MS 38654 USA

A Guide to Specifying Chelsea Geared Adapters

When you need to change P.T.O. output shaft rotation or clear a mounting obstacle, a geared adapter may fit the bill. However, it is important to note the following:

- Geared adapters will change the direction of P.T.O. rotation. Consider this when specifying driven equipment.
- Not all applications can use geared adapters. These situations are called out on the bottom of the Chelsea applications catalog pages. Check there before you spend time trying to specify a geared adapter.
- If an application cannot use an adapter, consider changing the P.T.O. assembly arrangement, moving the P.T.O. to the other side of the transmission, or using a change rotation gear box.
- Adapters are not available for use with P.T.O.s on automatic transmissions except the Allison 1000, 2000/2400 Series.
- Adapters are not available for use with 8-Bolt P.T.O.s.
- Current model Chelsea adapters do not change the P.T.O. speed.

Standard Geared Adapter Assemblies

Assembly Number	Figure Number	Number of Teeth	A Body Thickness or Degree of Angularity	B Pitch Line to Outer Face	C Pitch Line To Inner Face
328530-1X	1	22	1.650"	1.085"	3.100"
328530-2X	1	18	1.650"	1.117"	3.067"
328554-1X	2	19	22°	1.085"	1.110"
329138X-1X	3	24	49°	1.085"	1.085"

Figure 1

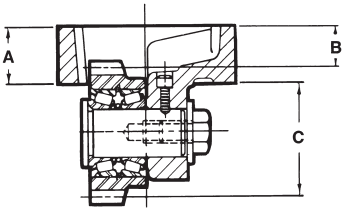

328530-1X
328530-2X

Where Used

328530-1X,-2X: Use on either side, any assembly arrangement, where the transmission gear pitch and pressure angle allows. These adapters will move the P.T.O. straight out from the transmission. These are deep reach geared adapters that generally require the use of extra spacers and special stud kits.

Figure 2

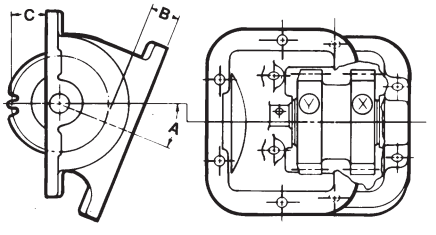

328554-1X

328554-1X: Use on the R.H. side of transmissions with a 6 pitch 20° pressure angle P.T.O. drive gear located towards the front of the opening. The adapter will move the P.T.O. down and towards the rear of the truck. Use a P.T.O. with a “3” assembly and an “AH” gear designator. This adapter requires the application to be derated by 30%.

Figure 3

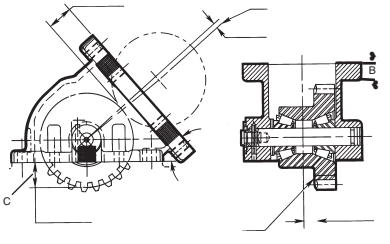

329138X,-1X

329138X: Use on the R.H. side of transmissions with a 6 pitch 20° pressure angle P.T.O. drive gear located towards the **front** of the truck, or on the L.H. when the P.T.O. drive gear is located towards the **rear** of the truck. The adapter will drop the P.T.O. straight down at a 49° angle. Use P.T.O.s with the same assembly arrangement and gear detail as shown in the application catalog.

329138-1X: Use on the R.H. side of transmissions with a 6 pitch 20° pressure angle P.T.O. drive gear located towards the **rear** of the truck, or on the L.H. when the P.T.O. drive gear is located towards the **front** of the truck. The adapter will drop the P.T.O. straight down at a 49° angle. Use P.T.O.s with the same assembly arrangement and gear detail as shown in the application catalog.

When a geared adapter can be used, four steps will help you specify it correctly.

1. Identify the correct gear detail and gear location.
2. Select the style that will perform the necessary function.
3. Calculate the correct backlash/spacing.
4. Select the correct stud kit.

Step 1: Identify the Gear Detail and Gear Location

The first step is to find adapters that will fit your application.

At the top of each transmission application page, Chelsea lists gear data. For example, on FLR-34, on the right hand side, the transmission gear is a 6 pitch, 20° spur gear (AH Input Gear). The transmission gear is forward of the centerline of the P.T.O. opening.

To select an adapter for this application, look only at adapters that have a 6 pitch, 20° spur gear (AH Input Gear) that is forward of the adapter body centerline when used on the right hand side of a transmission.

NOTE: If gear pitch unknown contact Chelsea Customer Service.

Step 2: Select the Style

The second step is to further narrow down your choices according to your application requirement.

If the purpose of specifying a geared adapter is simply to change rotation, look for the least expensive adapter available. Typically, this means an adapter that will bring the P.T.O. straight out from the transmission. Also check whether the adapter requires you to derate the P.T.O. torque rating. This occurs when the adapter contains needle bearings rather than roller bearings.

If the purpose of specifying a geared adapter is to clear mounting obstacles, determine whether moving the P.T.O. away from the transmission is enough, or whether it is necessary to angle the P.T.O. down to clear the object.

Always keep in mind how much room you have to work with and what mounting obstacles exist.

For our example, let's say we have 328530-1X on the shelf and it looks like it will work.

Step 3: Calculate the Backlash and Spacing.

Next, you must establish correct backlash between the transmission and the geared adapter. To do this, calculate the adapter P.L. (pitch line) to inner face dimension minus the transmission pitch line to aperture face dimension.

On page 2.74 of this booklet, we see that the adapter P.L. (pitch line) to inner face dimension for adapter 328530-1X is 3.100. On FLR-34 application page, for the right hand opening, we see that the P.L. (pitch line) to aperture face dimension for the transmission is 1.0850.

3.100 (adapter pitch line to inner face dimension)
- 1.085 (transmission P.L. to aperture face dimension)
2.015

In this example, we would need to back the adapter away from the transmission gear 2.015" to establish correct backlash. We would select a 7-A-2000 filler block (page 2.18 of this booklet), and use a thin gasket (.010") on each side of the filler block.

Our theoretical backlash is .003". We need to have between .006" and .012". Most likely, once the adapter is actually mounted and backlash is measured, it will fall between the accepted range. This is because the transmission case and the adapter may vary a few thousandths from the listed measurements.

NOTE: It is always the responsibility of the installer to measure and establish correct backlash. Follow the instructions given in the P.T.O. Owner's Manual and the Adapter Gears Owner's Manual.

Step 4: Select the Correct Stud Kit

To calculate the necessary length of the mounting studs for a P.T.O./adapter combination, add the following dimensions together.

Body thickness of the adapter
\+ Thickness of spacers/filler blocks
\+ Thickness of P.T.O. mounting flange
\+ Gaskets between the transmission adapter, and P.T.O.
\+ Stud outer diameter x 4
Required stud length, ± 1/16"

In our example:

328530-1X adapter body thickness	1.650"
7-A-200 filler thickness	2.000"
442X Series mounting flange thickness	.563"
(4) .010" gaskets*	.024"
Stud diameter** (.375) x 4	1.500"
	5.737"

Stud kit 7170-32X contains studs that are 5.750" long. Stud kits are listed in Chelsea publication HY25-2002-M1/US.

Remember that each application is different. It is up to the installer to make sure backlash between the transmission and adapter, and between the adapter and the P.T.O., is correct.

The 626, 628, 630 and 645 family of adapters is designed to simplify your selection and installation of a geared adapter when you require a change in rotation or are trying to clear an obstacle.

These adapters use the same input gears as the 442 and 489 Series P.T.O.s, and are available in kits. The 626 adapter fits a 6-Bolt opening and moves the P.T.O. straight out from the transmission. The 630 fits a 6-Bolt opening and angles the P.T.O. down at a 30° angle. The 645 fits a 6-Bolt opening and angles the P.T.O. down at a 45° angle. The 628 adapter fits an 8-Bolt transmission opening and accommodates a 6-Bolt P.T.O. The 626 and 645 are designed to mount to the Eaton Lightning transmission.

The 626, 630 and 645 adapter assemblies have the same pitch line to mounting face dimensions as the 442 Series, while the 628 will have the same mounting dimensions as the 489 Series. This means the same mounting hardware and spacers you use to mount the P.T.O. to a specific application will be the same hardware you use to mount the geared adapter to that application.

Using the 626, 628, 630 or 645 will change the direction of P.T.O. rotation. It will not change the speed of the P.T.O.

* A .010" gasket will compress to .006" if the capscrews or nuts are torqued properly. A .020" will compress to .012".

** Based on standard 442 stud diameter for this example.

Kit-Style Geared Adapters

626 Series

Six Bolt to Six Bolt Straight

- 6-Bolt P.T.O. for a 6-Bolt Transmission Opening
- Moves the P.T.O. straight out from the transmission
- Uses the same input gears as the 442 and 489 Series
- Uses the same mounting hardware and spacers used to mount a 442 Series to a specific application.

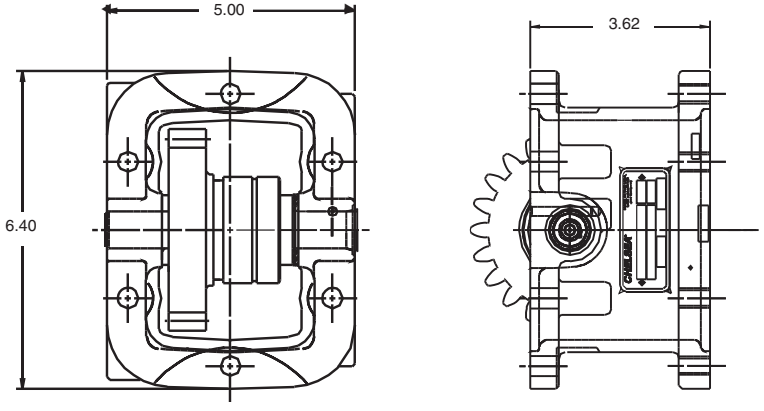

626 Series

628 Series

Six Bolt to Eight Bolt Straight

- 6-Bolt P.T.O. for a 8-Bolt Transmission Opening
- Moves the P.T.O. straight out from the transmission
- Uses the same input gears as the 442 and 489 Series
- Uses the same mounting hardware and spacers used to mount a 489 Series to a specific application.

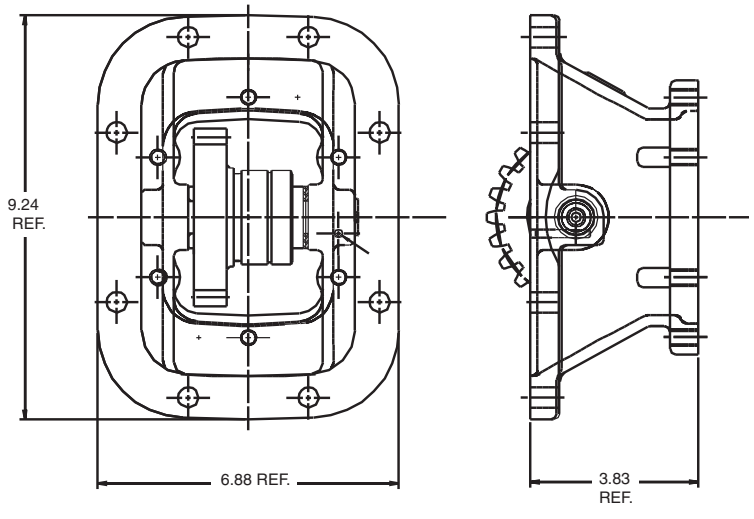

628 Series

Parker Hannifin Corporation
Chelsea Products Division
Olive Branch, MS 38654 USA

Kit-Style Geared Adapters (continued)

630 Series

Six Bolt to Six Bolt 30 Degrees

- 6-Bolt P.T.O. for a 6-Bolt Transmission Opening
- Moves the P.T.O. down at a 30° angle, helping to eliminate interference problems
- Uses the same input gears as the 442 and 489 Series

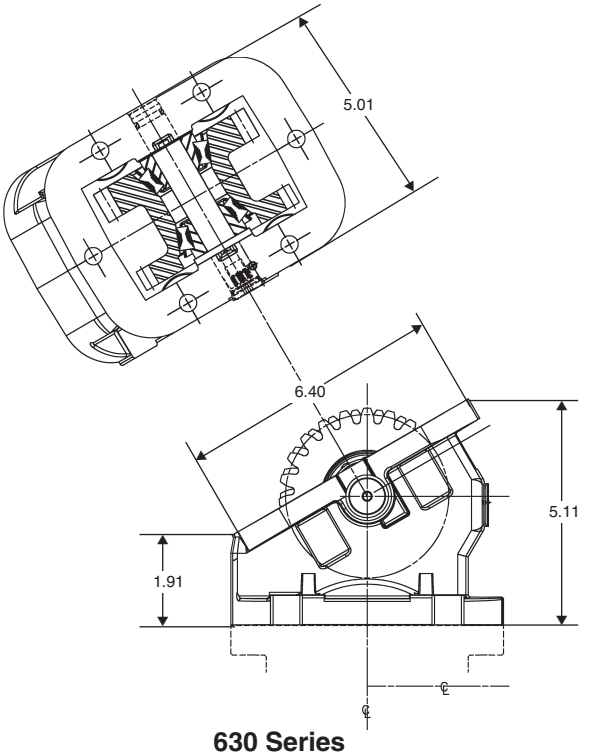

630 Series

645 Series

Six Bolt to Six Bolt 45 Degrees

- 6-Bolt P.T.O. for a 6-Bolt Transmission Opening
- Moves the P.T.O. down at a 45° angle, helping to eliminate interference problems
- Uses the same input gears as the 442 and 489 Series

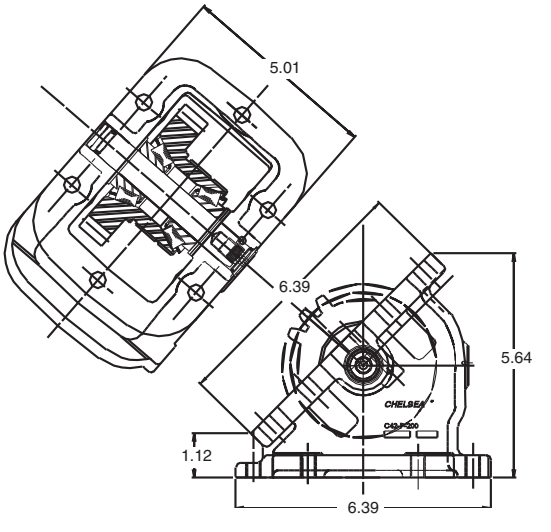

645 Series

Parker Hannifin Corporation
Chelsea Products Division
Olive Branch, MS 38654 USA

626 Gear Chart

Adapter Input Gear				Mounting Information P.T.O. to Adapter		P.T.O. Gear (Packaged Loose w/Adapter)			
Model No.	Part No.	Helix Angle	No. Teeth	Spacer Designator	Stud Kit	P.T.O. Pitch	Part No.	Helix Angle	No. Teeth
626*AB	5-P-1001	Spur	19	7-A-140	7170-3X	—**AB	5-P-1001	Spur	19
626*AH	5-P-1004	Spur	22	7-A-140	7170-3X	—**AH	5-P-1004	Spur	22
626*AP	5-P-1006	Left Hand	21	7-A-140	7170-3X	—**GX	5-P-1183	Right Hand	21
626*AR	5-P-1008	Left Hand	21	7-A-187	7170-3X	—**GY	5-P-1184	Right Hand	21
626*AW	5-P-1009	Left Hand	22	7-A-270	7170-4X	—**GZ	5-P-1185	Right Hand	22
626*BG	5-P-1015	Left Hand	23	7-A-140	7170-3X	—**HB	5-P-1187	Right Hand	23
626*BQ	5-P-1023	Left Hand	25	7-A-200	7170-4X	—**BP	5-P-1022	Right Hand	26
626*CB	5-P-1029	Left Hand	25	7-A-140	7170-3X	—**HD	5-P-1189	Right Hand	25
626*CD	5-P-1031	Left Hand	27	7-A-270	7170-4X	—**HE	5-P-1190	Right Hand	27
626*DA	5-P-1037	Spur	23	——	——	—**DA	5-P-1037	Spur	23
626*DU	5-P-1050	Left Hand	28	7-A-240	7170-4X	—**HH	5-P-1193	Right Hand	28
626*ED	5-P-1056	Left Hand	34	7-A-240	7170-4X	—**HK	5-P-1195	Right Hand	34
626*ES	5-P-1059	Left Hand	22	7-A-062	——	—**HL	5-P-1196	Right Hand	22
626*EV	5-P-1060	Spur	40	7-A-300	7170-4X	—**EV	5-P-1060	Spur	40
626*EW	5-P-1061	Left Hand	20	7-A-125	7170-3X	—**HM	5-P-1197	Right Hand	20
626*FC	5-P-1064	Left Hand	26	7-A-165	7170-3X	—**HP	5-P-1199	Right Hand	26
626*HY	5-P-1237	Left Hand	26	7-A-125	328170-94X	—**JB	5-P-1244	Right Hand	26
626*IT	KIT ADAPTER	——	——	——	——	——	——	——	——
626*JK	5-P-1261	Left Hand	24	7-A-187	7170-3X	—**JL	5-P-1262	Right Hand	24
626*JM	5-P-1263	Left Hand	22	7-A-125	7170-3X	—**JN	5-P-1264	Right Hand	22
626*JU	5-P-1316	Left Hand	25	7-A-200	7170-4X	—**KA	5-P-1318	Right Hand	25
626*JW	5-P-1319	Left Hand	23	7-A-093	7170-3X	—**KB	5-P-1321	Right Hand	23
626*KX	5-P-1411	Left Hand	26	7-A-125	328170-94X	—**KY	5-P-1412	Right Hand	26

628 Gear Chart

Adapter Input Gear				Mounting Information P.T.O. to Adapter		P.T.O. Gear (Packaged Loose w/Adapter)			
Model No.	Part No.	Helix Angle	No. Teeth	Spacer Designator	Stud Kit	P.T.O. Pitch	Part No.	Helix Angle	No. Teeth
628*AB	5-P-1001	Spur	19	7-A-140	7170-3X	—**AB	5-P-1001	Spur	19
628*AH	5-P-1004	Spur	22	7-A-165	7170-3X	—**AH	5-P-1004	Spur	22
628*AR	5-P-1008	Left Hand	21	7-A-200	7170-3X	—**GY	5-P-1184	Right Hand	21
628*BG	5-P-1015	Left Hand	23	7-A-165	7170-3X	—**HB	5-P-1187	Right Hand	23
628*DA	5-P-1037	Spur	23	——	328170-76X	—**DA	5-P-1037	Spur	23
628*DU	5-P-1050	Left Hand	28	7-A-270	7170-5X	—**HH	5-P-1193	Right Hand	28
628*EV	5-P-1060	Spur	40	7-A-300	7170-5X	—**EV	5-P-1060	Spur	40
628*IT	KIT ADAPTER	——	——	——	——	——	——	——	——

630 Gear Chart

Adapter Input Gear				Mounting Information P.T.O. to Adapter		P.T.O. Gear (Packaged Loose w/Adapter)			
Model No.	Part No.	Helix Angle	No. Teeth	Spacer Designator	Stud Kit	P.T.O. Pitch	Part No.	Helix Angle	No. Teeth
630*AB	5-P-1001	Spur	19	7-A-140	7170-3X	—**AB	5-P-1001	Spur	19
630*AB	5-P-1001	Spur	19	7-A-140	7170-3X	—**AB	5-P-1001	Spur	19
630*AH	5-P-1004	Spur	22	7-A-140	7170-3X	—**AH	5-P-1004	Spur	22
630*AP	5-P-1006	Left Hand	21	7-A-140	7170-3X	—**GX	5-P-1183	Right Hand	21
630*AR	5-P-1008	Left Hand	21	7-A-187	7170-3X	—**GY	5-P-1184	Right Hand	21
630*BG	5-P-1015	Left Hand	23	7-A-140	7170-3X	—**HB	5-P-1187	Right Hand	23
630*BQ	5-P-1023	Left Hand	25	7-A-200	7170-4X	—**BP	5-P-1022	Right Hand	26
630*BS	5-P-1025	Left Hand	26	7-A-062	7170-4X	—**BR	5-P-1024	Right Hand	26
630*CD	5-P-1031	Left Hand	27	7-A-270	7170-4X	—**HE	5-P-1190	Right Hand	27
630*DA	5-P-1037	Spur	23	——	——	—**DA	5-P-1037	Spur	23
630*DU	5-P-1050	Left Hand	28	7-A-240	7170-4X	—**HH	5-P-1193	Right Hand	28
630*ED	5-P-1056	Left Hand	34	7-A-240	7170-4X	—**HK	5-P-1195	Right Hand	34
630*ES	5-P-1059	Left Hand	22	7-A-062	——	—**HL	5-P-1196	Right Hand	22
630*EV	5-P-1060	Spur	40	7-A-300	7170-4X	—**EV	5-P-1060	Spur	40
630*EW	5-P-1061	Left Hand	20	7-A-125	7170-3X	—**HM	5-P-1197	Right Hand	20
630*FN	5-P-1070	Left Hand	26	7-A-300	7170-4X	—**HR	5-P-1201	Right Hand	26
630*HY	5-P-1237	Left Hand	26	7-A-125	7170-1X	—**JB	5-P-1244	Right Hand	26
630*IT	KIT ADAPTER	——	——	——	——	——	——	——	——
630*JK	5-P-1261	Left Hand	24	7-A-187	7170-3X	—**JL	5-P-1262	Right Hand	24
630*JM	5-P-1263	Left Hand	22	7-A-125	7170-3X	—**JN	5-P-1264	Right Hand	22
630*JU	5-P-1316	Left Hand	25	7-A-200	7170-4X	—**KA	5-P-1318	Right Hand	25
630*JW	5-P-1319	Left Hand	23	7-A-093	7170-3X	—**KB	5-P-1321	Right Hand	23
630*KX	5-P-1411	Left Hand	26	7-A-125	328170-94X	—**KY	5-P-1412	Right Hand	——

645 Gear Chart

Adapter Input Gear				Mounting Information P.T.O. to Adapter		P.T.O. Gear (Packaged Loose w/Adapter)			
Model No.	Part No.	Helix Angle	No. Teeth	Spacer Designator	Stud Kit	P.T.O. Pitch	Part No.	Helix Angle	No. Teeth
645*AB	5-P-1001	Spur	19	7-A-140	7170-3X	—**AB	5-P-1001	Spur	19
645*AB	5-P-1001	Spur	19	7-A-140	7170-3X	—**AB	5-P-1001	Spur	19
645*AG	5-P-1003	Spur	22	7-A-140	7170-3X	—**AG	5-P-1003	Spur	22
645*AH	5-P-1004	Spur	22	7-A-140	7170-3X	—**AH	5-P-1004	Spur	22
645*AP	5-P-1006	Left Hand	21	7-A-140	7170-3X	—**GX	5-P-1183	Right Hand	21
645*AR	5-P-1008	Left Hand	21	7-A-187	7170-3X	—**GY	5-P-1184	Right Hand	21
645*AW	5-P-1009	Left Hand	22	7-A-270	7170-4X	—**GZ	5-P-1185	Right Hand	22
645*BQ	5-P-1023	Left Hand	25	7-A-200	7170-4X	—**BP	5-P-1022	Right Hand	26
645*CB	5-P-1029	Left Hand	25	7-A-140	7170-3X	—**HD	5-P-1189	Right Hand	25
645*CD	5-P-1031	Left Hand	27	7-A-270	7170-4X	—**HE	5-P-1190	Right Hand	27
645*DA	5-P-1037	Spur	23	——	——	—**DA	5-P-1037	Spur	23
645*DU	5-P-1050	Left Hand	28	7-A-240	7170-4X	—**HH	5-P-1193	Right Hand	28
645*ED	5-P-1056	Left Hand	34	7-A-240	7170-4X	—**HK	5-P-1195	Right Hand	34
645*ES	5-P-1059	Left Hand	22	7-A-062	——	—**HL	5-P-1196	Right Hand	22
645*EV	5-P-1060	Spur	40	7-A-300	7170-4X	—**EV	5-P-1060	Spur	40
645*EW	5-P-1061	Left Hand	20	7-A-125	7170-3X	—**HM	5-P-1197	Right Hand	20
645*FC	5-P-1064	Left Hand	26	7-A-165	7170-3X	—**HP	5-P-1199	Right Hand	26
645*FN	5-P-1070	Left Hand	26	7-A-300	7170-4X	—**HR	5-P-1201	Right Hand	26
645*GR	5-P-1157	Spur	23	7-A-062	——	—**GR	5-P-1157	Spur	23
645*HY	5-P-1237	Left Hand	26	7-A-125	328170-94X	—**JB	5-P-1244	Right Hand	26
645*IT	KIT ADAPTER	——	——	——	——	——	——	——	——
645*JD	5-P-1248	Left Hand	20	7-A-200	7170-3X	—**JE	5-P-1249	Right Hand	20
645*JK	5-P-1261	Left Hand	24	7-A-187	7170-3X	—**JL	5-P-1262	Right Hand	24
645*JM	5-P-1263	Left Hand	22	7-A-125	7170-3X	—**JN	5-P-1264	Right Hand	22
645*JP	5-P-1268	Left Hand	33	7-A-187	7170-3X	—**JQ	5-P-1269	Right Hand	33
645*JS	5-P-1310	Left Hand	20	7-A-062		—**JY	5-P-1312	Right Hand	20
645*JU	5-P-1316	Left Hand	25	7-A-200	7170-4X	—**KA	5-P-1318	Right Hand	25
645*JW	5-P-1319	Left Hand	23	7-A-093	7170-3X	—**KB	5-P-1321	Right Hand	23
645*KJ	5-P-1405	Left Hand	33	——	328170-94X	—**KK	5-P-1406	Right Hand	33
645*KL	5-P-1407	Left Hand	29	7-A-200	7170-4X	—**KM	5-P-1408	Right Hand	29
645*KN	5-P-1383	Left Hand	27	7-A-270	7170-4X	—**KP	5-P-1384	Right Hand	27
645*KX	5-P-1411	Left Hand	26	7-A-125	328170-94X	—**KY	5-P-1412	Right Hand	——

Geared Adapters and Plates for Import Transmissions

When these adapters or plates appear on a transmission application page or come with the P.T.O. assembly, they MUST be used. There are no substitutes.

As with other Chelsea P.T.O.s, these geared adapters will change P.T.O. rotation, but they will not change P.T.O. speed.

Geared Adapters and Plates for Import Transmissions

Transmission	Adapter Gear or Plate General Description	"A" Body Thickness or Degree of Angularity
Hino		
328888X (4)	Hino KA & KB, MF06S "KK" Code Models 3320, 3323 & 5523	2"
328887-1X (1)	Hino LA, LE05S "CG" Code, LH05S, LB	2"
328962X (1)	Hino LF06S "DG" Code, Models 2218 & 2218LP	2"
328993X (1)	Hino MG06S "LK" & "LL" Codes	2"
329007X (1)	Hino LF06S "DH" & "DJ" Codes	2"
329095X (1)	Hino LF05S Models 1415 & 1715	2"
Isuzu		
328960-1X (1)	Isuzu MBG5B & MBG5H	3.750"
328960-2X (1)	Isuzu MBG5F	3.750"
328983X (1)	Isuzu MLH5G	2.500"
329000-1X (1)	Isuzu MSA-5D & MXA-5D	1.155"
328985X (1)	Isuzu MLD6E, MLD6C, MLD6F & MLD6Q	1.750"
329017X (1)	Isuzu MBG5C, MBD5A & MBG5A	3.665"
Mitsubishi		
328997X (1)	M4, M5, M6, M5S5 Models FH100 & FK415, M6S5 Models FK455 & FM555, M6S6 Model FM555	45°
329211X (2)	(After 4/1/94) M8S6	45°
329210X (2)	(After 4/1/94) M8S2X5	45°
42-P-211 (3)	MO35S5 (included with 447C P.T.O.)	1.470"
Nissan		
329011X (4)	MPS-50V, TMH-402 "CPB" Series, TMH-425 "CPB" Series, & TMH-462	24°
329015X (4)	MPS-60B UD3000HD and UD3300, & TMH-464 "CPC" Series	24°
329086X (1)	TMH-704, TMH-762, MHS-50, MHS-60, MHS-50A, MHS-50U MHS-60U, & MHS60-A	4.360"
329000-2X (1)	MES-50A, MES-50B & MES-50C	1.155"
42-P-190 (3)	MLS-61A, MLS-61B UD3000SD (included with 447A P.T.O.)	1.329"

(1) This geared adapter adapts a non-standard opening on the transmission to a standard 6-Bolt opening. It will move the P.T.O. straight out from the transmission by approximately the amount indicated in column "A".

(2) This is a wedge shaped adapter that adapts a non-standard 8-Bolt opening on the transmission to a standard 6-Bolt opening. It will move the P.T.O. out approximately 2.5" and down at a 45° angle.

(3) This is an adapter plate that converts the non-standard opening on the transmission to a standard 6-Bolt opening.

(4) This is a wedge shaped spacer that adapts the non-standard 8-Bolt opening on the transmission to a standard 6-Bolt opening.

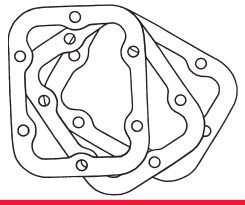

The lubricant in the transmission also lubricates the P.T.O. Therefore, one or more gaskets (as required) must always be used between the metal surfaces of the Power Take-Off, the adapter gear assembly, the adapter plate, and the filler block(s).

Mounting Gasket Kits

Gasket Kit Part Number	Qty.	Gasket Part Number	Application
328570-1X	25 25	35-P-15-1 35-P-15-2	Standard 8 Bolt
328570-2X	10	35-P-15-1	Standard 8 Bolt
328570-3X	100	35-P-9-1	Standard 6 Bolt
328570-4X	100	35-P-9-2	Standard 6 Bolt
328570-6X	50	35-P-9-2	Standard 6 Bolt
329062-3X	25	35-P-56 329015X	328888X, 329011X, & Adapters
329062-5X	25 25	35-P-63-1 35-P-63-2	328957X Adapter
329062-7X	25	35-P-65	328962X & 328993X Adapters
329062-8X	25	35-P-67	328983X Adapter
329062-9X	25 25	35-P-68-1 35-P-68-2	328985X Adapter
329062-10X	25	35-P-72	328997X Adapter
329062-11X	25	35-P-73	329000-1X Adapter

Special Mounting Gaskets

Gasket Part Number	Application
35-P-41	270 X AAJ
35-P-69	271 Series Adapter Plate Mounting
35-P-74	267, 269, 277/278, 859, 867
35-P-65	435, 437
35-P-84	271 Series P.T.O. mounting

Cable Controls Stainless Steel Vinyl Covered Wire

Assembly (Wire & Knob)	Wire Only	Knob Only
328346-10X*	378441-10 (10 Foot Length)	378502
328346-15X**	378441-15 (15 Foot Length)	378502
328346-20X	378441-20 (20 Foot Length)	378502
328346-25X	378441-25 (25 Foot Length)	378502
328346-30X	378441-30 (30 Foot Length)	378502

*This 10 foot cable and knob are standard on the following Chelsea P.T.O.s with a "W" shifter type: 100, 221, 260, 290, 352, 435, 442, 447, 489, and 812.

** The 15 foot cable is standard on the 2442.

Gasket and Seal Kits

P.T.O. Series Part Number	Gasket and Seal Kit	Shifter Cover Seal Kit Part Number		
		Cable Control	Lever Control	Air Control
100	328356-15X	328356-15X	328356-26X	328356-17X
221	328356-13X			
230	328356-55X 329043-13X (BD Output)			
231	328356-56X			
236	329043-7X* 329043-8X** 329043-13X (BD Output)			
246	329376-1X			
267	329337-2X			
270	328970X* 328971X*** 329043-18X (BA Output) 328356-21X			
271	328970X* 328971X*** 329043-18X (BA Output) 328356-22X			
277/278	329071-33X (XY Output Only) 329071-19X			
290	328356-67X			328356-71X
295			328356-71X	
442,447	328356-67X 328356-69X (A, B & C Ratio)	328356-15X	328356-26X	328356-71X
452	328356-59X	328356-15X		
489	328356-50X 328356-69X (A & C Ratio)	328356-15X	328356-26X	328356-17X
660/680	328356-15X	328356-26X	328356-17X	
812	328356-48X	328356-15X	328356-18X	328356-19X
823 Standard Output		328356-2X	328356-2X	
823 w/shifter seal (AB, AC & XV Output) less shifter seal (AB, AC & XV Output)		 328356-3X 328356-5X	 328356-3X 328356-5X	
859	329071-20X			
863	328356-39X			
867	329071-27X (XS Output) 329071-28X (XV & AB Output) 329071-29X (XY Output) 329071-34X (AF Output)			
880 Standard Output Pump Output	 328356-51X 328356-52X		 328356-53X 328356-53X	 328356-54X 328356-54X
901	328267X			328356-40X
912 Speedometer w/o Speedometer	328356-65X 328356-63X 328356-64X		328356-62X	
931 Standard Output Pump Flange	 328356-45X 328356-46X			
2230 Top Unit Bottom Unit	 328356-15X 328356-55X			
2442 Top Unit Bottom Unit	 328356-15X 328356-13X	 328356-15X	 328356-26X	 328356-17X

* Seal, Gasket, Bearing, Clutch Pack Kit
** Seal, Gasket Bearing, Piston, Clutch Pack Kit
*** Gasket, Seal, Bearing, Clutch Pack Kit w/Piston & Back-up Cylinder

The kits shown below are included for standard applications. Many applications require special stud kits. These are called out on the application pages in the Chelsea HY25-3000/US catalog. Therefore, always consult the application pages in the Chelsea HY25-3000/US before specifying stud kits.

Mounting Kits

Series	Standard (X*)	Deep Mount (Z*)	Metric (G*)	Miscellaneous
CAT-D	7170-120X			7170-119X (XV)
CAT-H	7170-120X			
100	8000-4X		7170-64X	
221	328170-1X	328170-26X		(R*) 328170-155X
230	328170-101X		7170-103X	
231			7170-104X	(M*) 7170-74X
236	7170-1X	328170-95X	7170-72X	
243				(A*) 7170-100X
246				(F*) 8000-19X
250			7170-102X	
267	7170-86X (FJ) 7170-117X (KV)			
269	7170-107X			(J*) 7170-87X
270	328170-101X		7170-103X	(A*) 328170-205X
271			7170-104X	(M*) 7170-74X
277	7170-86X (FJ) 7170-117X (KV)			
278	7170-86X (FJ) 7170-117X (KV)			
290	328170-76X		7170-72X	
295	328170-76X		7170-72X	(K*) 328170-76X
340	7170-1X	328170-95X	7170-72X	(S*) 328170-95X
352	7170-2X	7170-1X	7170-72X	
429			7170-72X	
435	Varies by transmission. Consult the Chelsea HY25-3000/US catalog.			
442	328170-76X	328170-77X	7170-72X	
447	328170-76X	328170-77X	7170-72X	
452	7170-2X	7170-1X	7170-72X	
489	328170-200X	328170-200X	7170-68X	
522	8000-18X			
541	328794-50X			
660	328170-76X	328170-77X	7170-72X	(D*) 7170-72X
680	328170-200X	328170-200X	7170-68X	
800	328170-113X			
812	328170-115X	328170-115X	7170-113X	
823	328170-8X		328170-185X	
852	328170-8X			
859	7170-86X (FJ) 7170-118X (KV)			
863	328170-8X		328170-185X	
867	7170-86X (FJ) 7170-118X (KV)			
880	328170-192X	328170-195X	328170-201X	
885	328170-192X			
626	328170-76X		7170-72X	7170-72X (626DJA*)
628	328170-209X	328170-209X	328170-201X	
630	328170-76X	328170-77X	7170-78X	7170-72X (630DJA*)
645	328170-76X	328170-77X	7170-78X	7170-72X (645DJA*)
329138X,-1X	328170-95X			
328481X	328170-128X			
328481G			8000-14X	
328564X	328170-127X			
328564G			8000-15X	

* This letter is the Mounting Type Designator found in the Model Number — Example: 442XSAHX-A3XK

P.T.O./Dump Pump Combo Valve:

This shift option is designed to make P.T.O./dump pump air shift applications safer and easier. The compact design features a safety interlock to prevent accidental P.T.O. engagement, automatic P.T.O. disengagement when in the “lower” position to prevent the P.T.O. from being accidentally left in gear, and controlled lowering (feathering) for smooth dump body descent. The controls are easily operated, even when the driver is wearing gloves. It is ideal for use in systems with Chelsea dump pumps, wet line reservoirs and P.T.O.s.



Features

Part Number	P.T.O. Kick Out	Spring Return to Neutral on Dump Valve Control	Manual Return to Neutral on Dump Valve	Safety Lock on P.T.O.	Detent Lock on Neutral	Smooth Descent	LED Light
Air Shift P.T.O.s							
329214X & -2X	x	x		x	x	x	x
329316X & -2X			x	x	x	x	x
Hydraulic Shift P.T.O.s							
329214-1X	x	x		x	x	x	x
329216-1X			x	x	x	x	x

Order Code	P.T.O. Models	Chelsea Part No.	Installation Kit	Description
			Air Shift P.T.O.s	
S	442 & 489	329214X	328388-65X	Hoist-P.T.O. control valve that allows a smooth descent of the body in the “lower” position. Features automatic disengagement of the P.T.O. in “lower”. Lever on the control valve returns to neutral from the “raise” position when released (dead man’s handle).
S	230/231 & 236	329214-2X	328388-89X	
T	442 & 489	329316X	328388-72X	Hoist-P.T.O. control valve that allows a smooth descent of the body in the “lower” position. Requires manual disengagement of the P.T.O. in “lower”.
T	230/231 & 236	329316-2X	328388-90X	
			Hydraulic Shift P.T.O.s	
S	277/278	329214-1X	328388-85X	Hoist-P.T.O. control valve that allows a smooth descent of the body in the “lower” position. Features automatic disengagement of the P.T.O. in “lower”. Lever on the control valve returns to neutral from the “raise” position when released (dead man’s handle).
S	270/271	329214-1X	328388-87X	
T	277/278	329216-1X	328388-86X	Hoist-P.T.O. control valve that allows a smooth descent of the body in the “lower” position. Requires manual disengagement of the P.T.O. in “lower”.
T	270/271	329216-1X	328388-88X	

Parker Hannifin Corporation
Chelsea Products Division
Olive Branch, MS 38654 USA

General Specifications

Pump	Gear Width	GPM US at 1000 R.P.M.	Cubic Inch Displacement	Horsepower Input (at 2000 PSI) 1000 R.P.M.	Maximum Pressure	Maximum Speed
C101/102-20	2.000"	22	5.1	25.6	2500	2400 R.P.M.
C101/102-25	2.500"	27.6	6.38	31	2500	2400 R.P.M.
G101/102-1-0.7	.750"	6.4	1.48	6.2	2500	2400 R.P.M.
G101/102-1-1.5	1.500"	12.8	2.96	13.7	2500	2400 R.P.M.
G101/102-1-2.0	2.000"	17	3.94	18.8	2500	2400 R.P.M.

All data based on S.A.E. 10W oil at 150°F. Minimum pump speed at pressure is 800 R.P.M. US Gallons displacements are theoretical. They will vary depending on speed, pressure, and temperature.

Three-Line Installation (for intermittent or continuous operation)

With the internal sleeve installed and three-line installation, two advantages are provided:

A. Minimizes the possibility of overheating

B. The filter keeps the system clean for prolonged trouble-free operation.*

*If filter is used, check valve must be added to prevent backflushing filter.

Dump Pump 3-Line System Shown in the Neutral Mode

In the neutral mode, all the flow goes across the spool to the Return Port and back to tank because the internal by-pass passage is blocked by the sleeve in the inlet port. Any pressure higher than the setting of the relief valve is relieved internally through the by-pass to the Return Port.

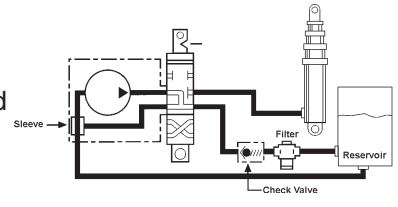

Two-Line Installation (for intermittent operation only)

With the internal sleeve removed a two-line hook-up can be arranged, however the oil circulates internally (within the pump). Continuous operation may result in overheating.

Dump Pump 2-Line System Shown in the Neutral Mode

In the neutral mode, the flow goes across the spool to the Return Port and the integral by-pass passages. Because the Return Port is plugged, and the pressure drop through the by-pass is less than what is required to activate the cylinder, all flow goes through the by-pass back to the inlet side of the pump. Any pressure higher than the setting of the relief valve is relieved internally through the by-pass, back to the inlet port.

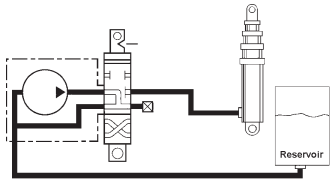

These pumps are shipped with an internal sleeve for three-line (continuous duty, filtered) systems. For two-line systems for intermittent duty cycles*, discard the sleeve.

*Pump/P.T.O. operates 5 out of every 15 minutes. Note that three-line systems are always recommended to prolong the trouble-free operation of the hydraulic system.

Notes

Parker Hannifin Corporation
Chelsea Products Division
Olive Branch, MS 38654 USA

Assembly Options

Parker Hannifin Corporation
Chelsea Products Division
Olive Branch, MS 38654 USA

100 Series 3.1
221 Series 3.2
230/231 Series 3.3
236 Series 3.4
243 Series 3.5
246 Series 3.6
250 Series 3.7
267 Series 3.8
269 Series 3.9
270/271 Series 3.10
277/278 Series 3.11
290 Series 3.12
340 Series 3.13
352 Series 3.14
429 Series 3.15
435 Series 3.16
442 Series 3.17
447 Series 3.18
452 Series 3.19
489 Series 3.20
522 Series 3.21
541 Series 3.22
660 Series 3.23
680 Series 3.24
800 Series 3.25
812 Series 3.26
823 Series 3.27
852 Series 3.28
859 Series 3.29
863 Series 3.30
867 Series 3.31
880 Series 3.32
885 Series 3.33
901 Series 3.34
912 Series 3.35
941 Series 3.36
CAT-D 3.37
CAT-H 3.38
2230 Series 3.39
2442 Series 3.40
626, 628, 630 and 645 Series 3.41

Parker Hannifin Corporation
Chelsea Products Division
Olive Branch, MS 38654 USA

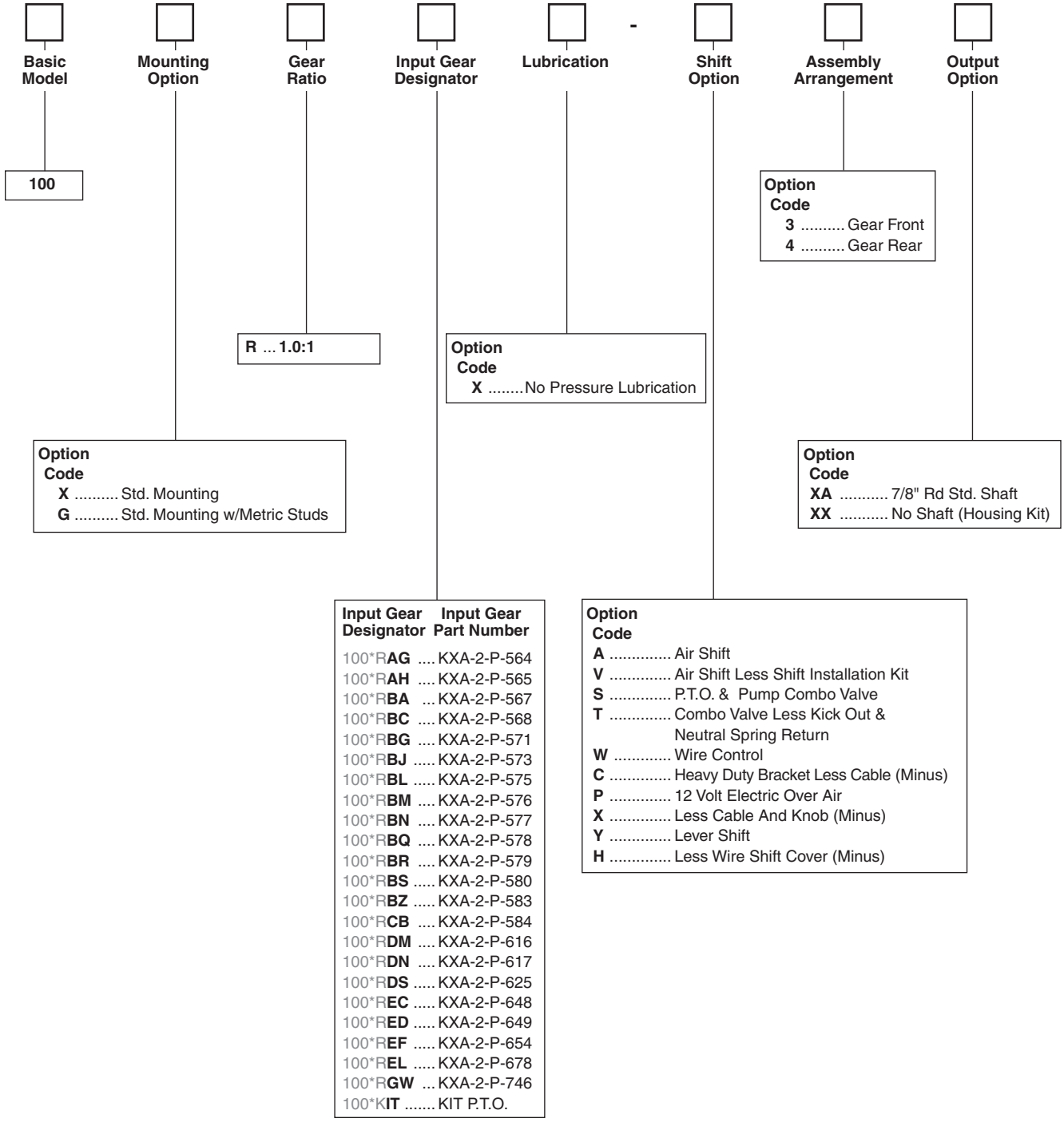

Parker Hannifin Corporation
Chelsea Products Division
Olive Branch, MS 38654 USA

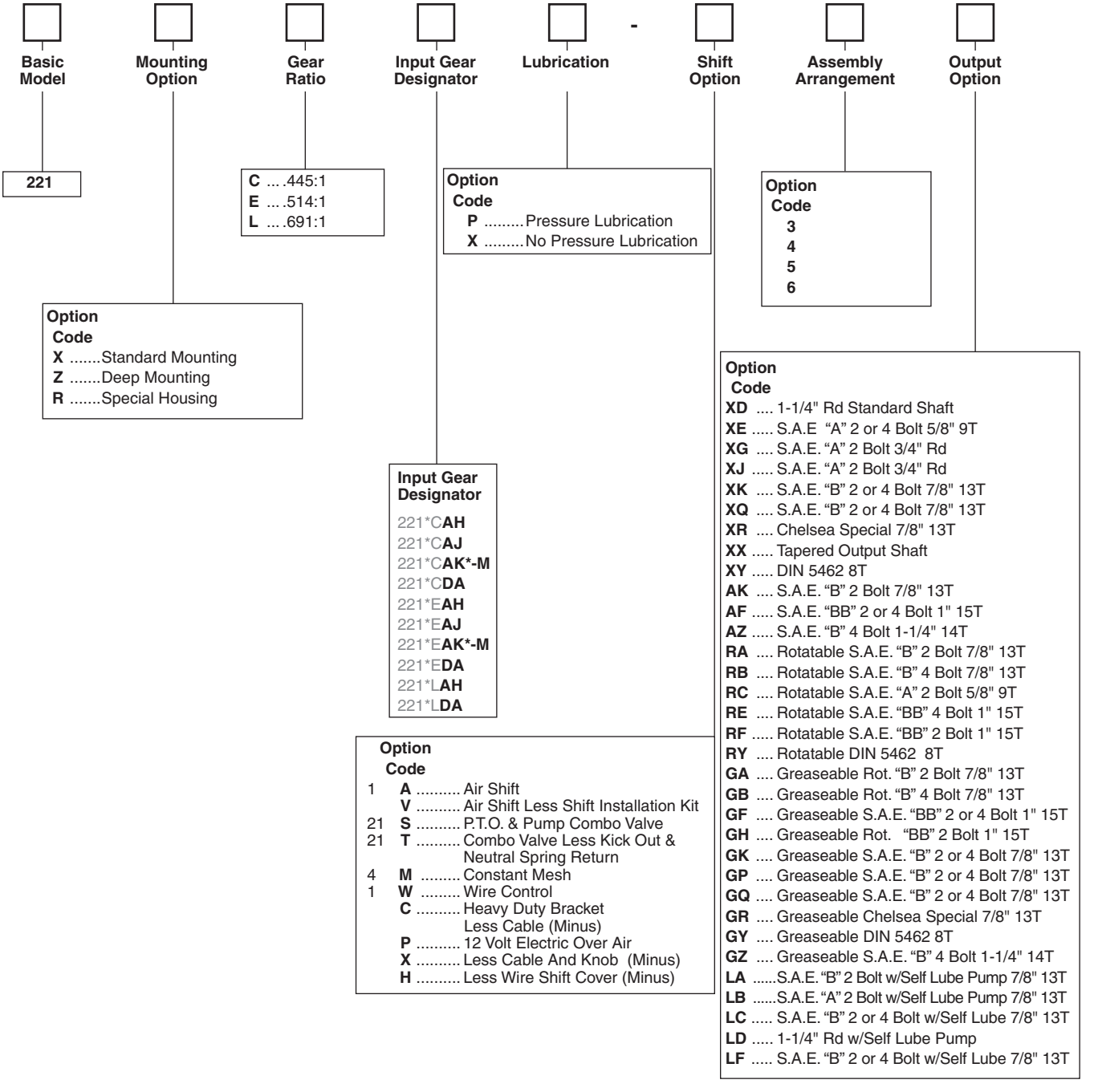

❶ Includes mounting parts
❹ Available only on 221*CAK and 221*EAK
㉑ Includes installation kit, console sold separately

Parker Hannifin Corporation
Chelsea Products Division
Olive Branch, MS 38654 USA

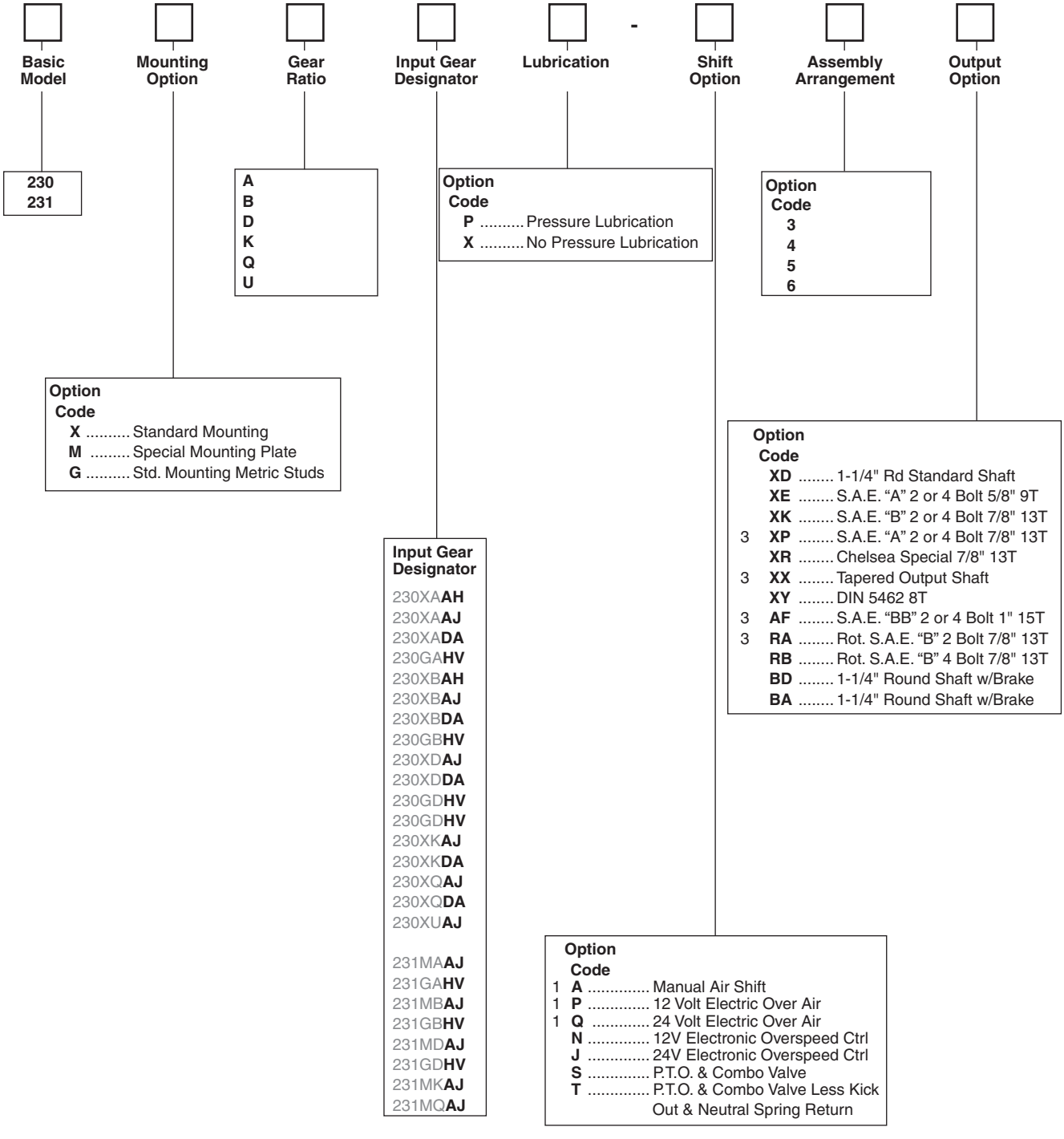

❶ Includes mounting parts
❸ Available assembly 3 and 5 only

Parker Hannifin Corporation
Chelsea Products Division
Olive Branch, MS 38654 USA

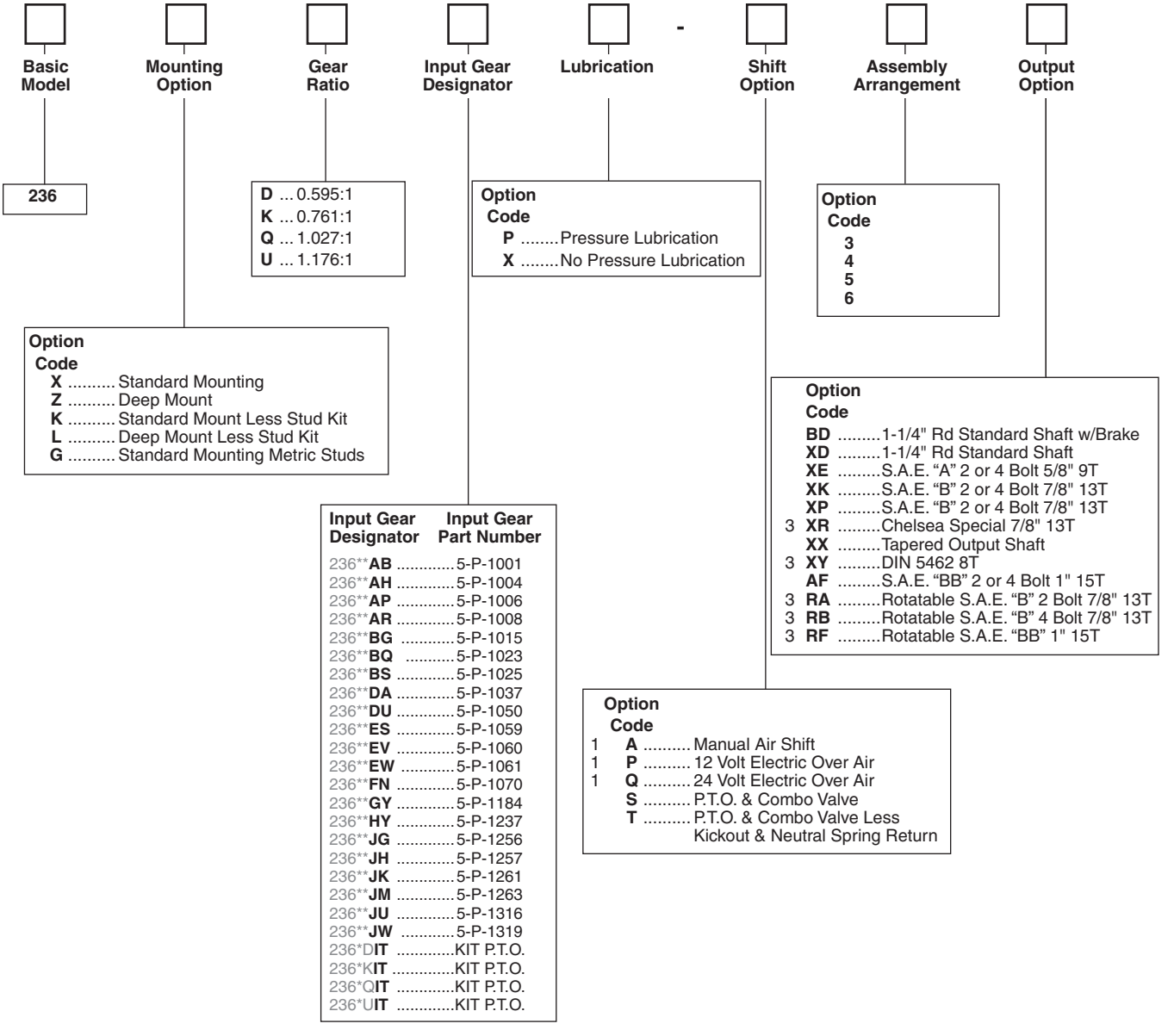

❶ Includes mounting parts
❸ Available assembly 3 and 5 only

Parker Hannifin Corporation
Chelsea Products Division
Olive Branch, MS 38654 USA

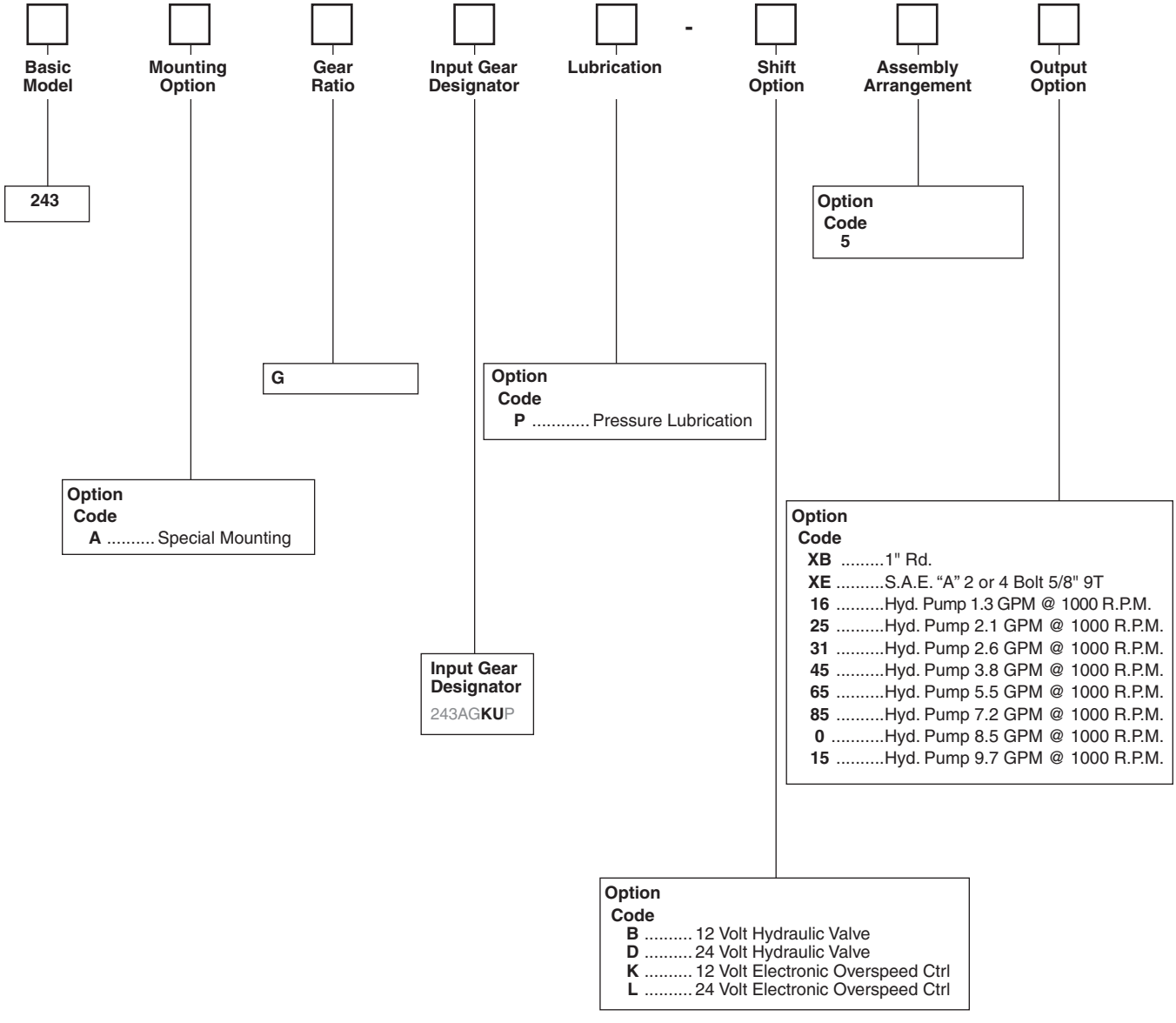

Parker Hannifin Corporation
Chelsea Products Division
Olive Branch, MS 38654 USA

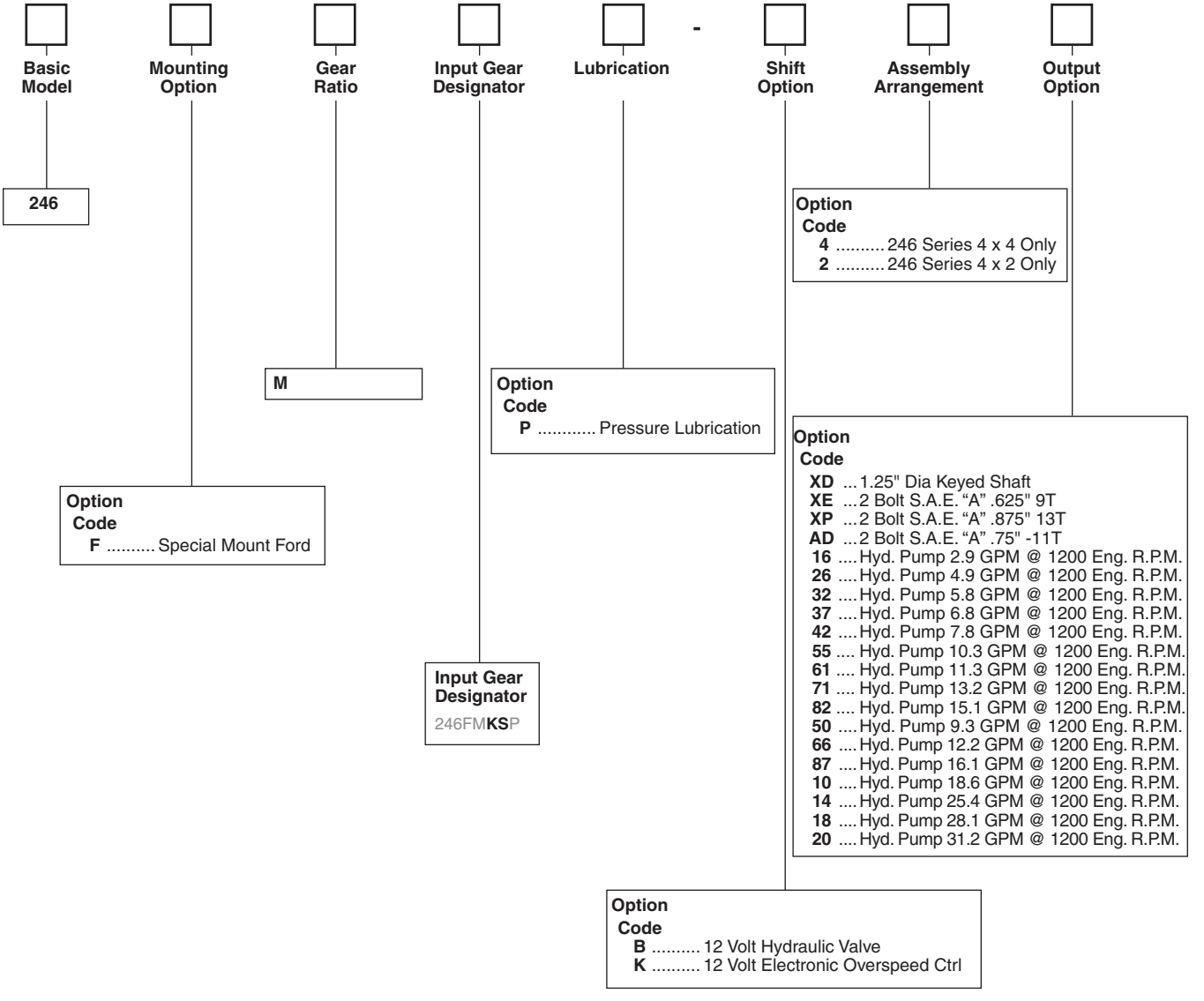

Parker Hannifin Corporation
Chelsea Products Division
Olive Branch, MS 38654 USA

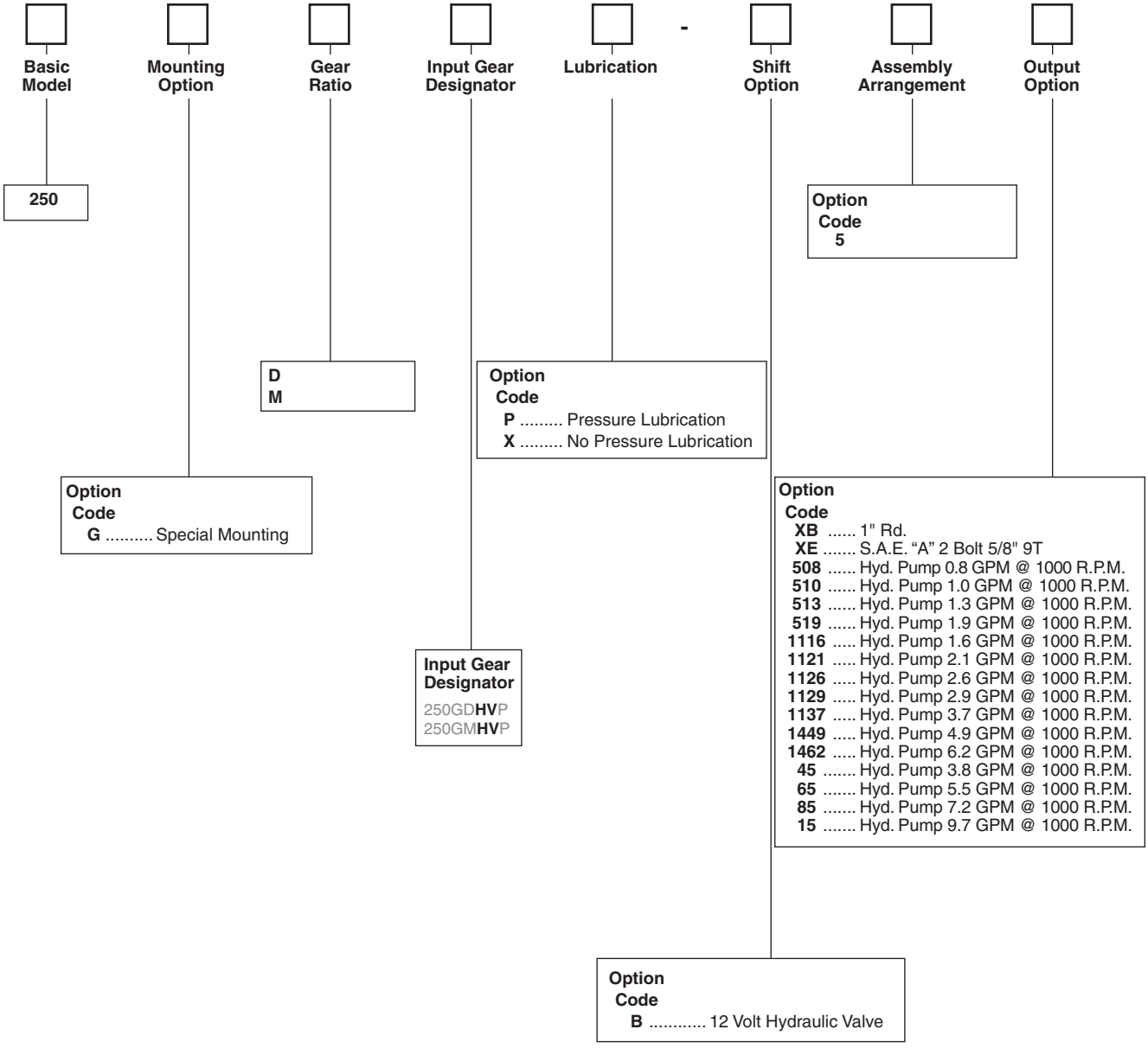

Parker Hannifin Corporation
Chelsea Products Division
Olive Branch, MS 38654 USA

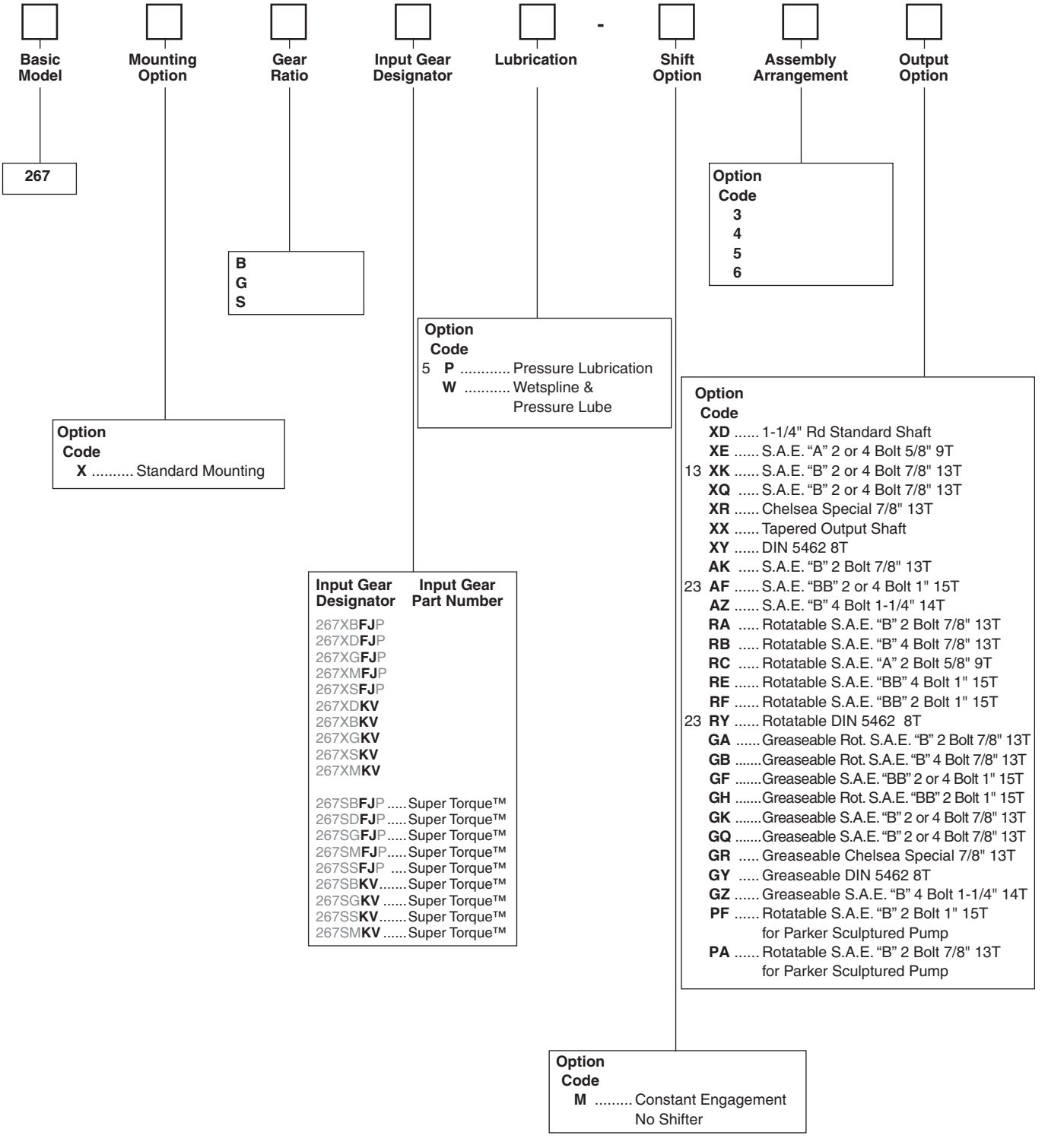

❺ Automatically pressure lubed
⓭ Available assembly "5" only
㉓ Must be purchased with wetspline

Parker Hannifin Corporation
Chelsea Products Division
Olive Branch, MS 38654 USA

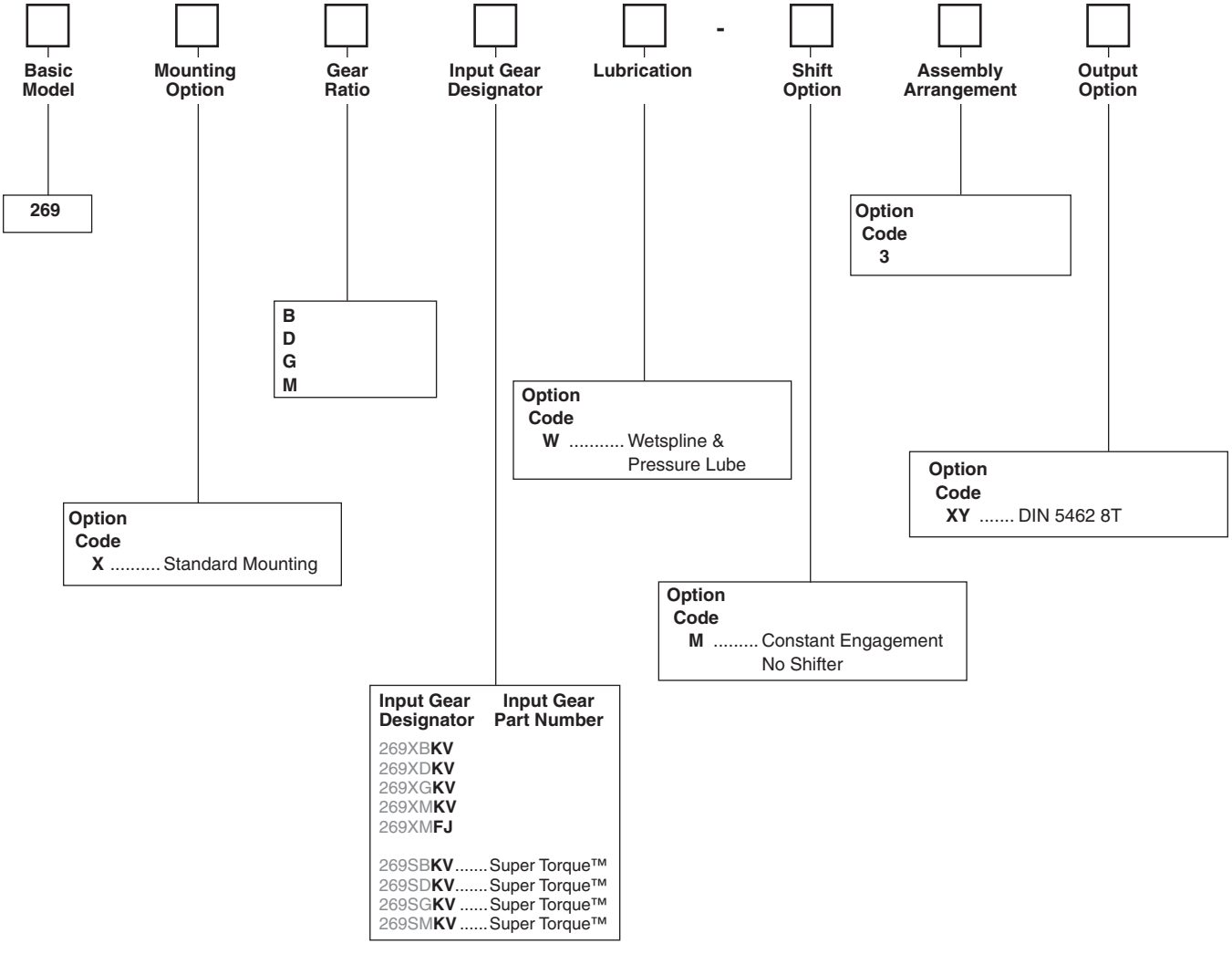

Parker Hannifin Corporation
Chelsea Products Division
Olive Branch, MS 38654 USA

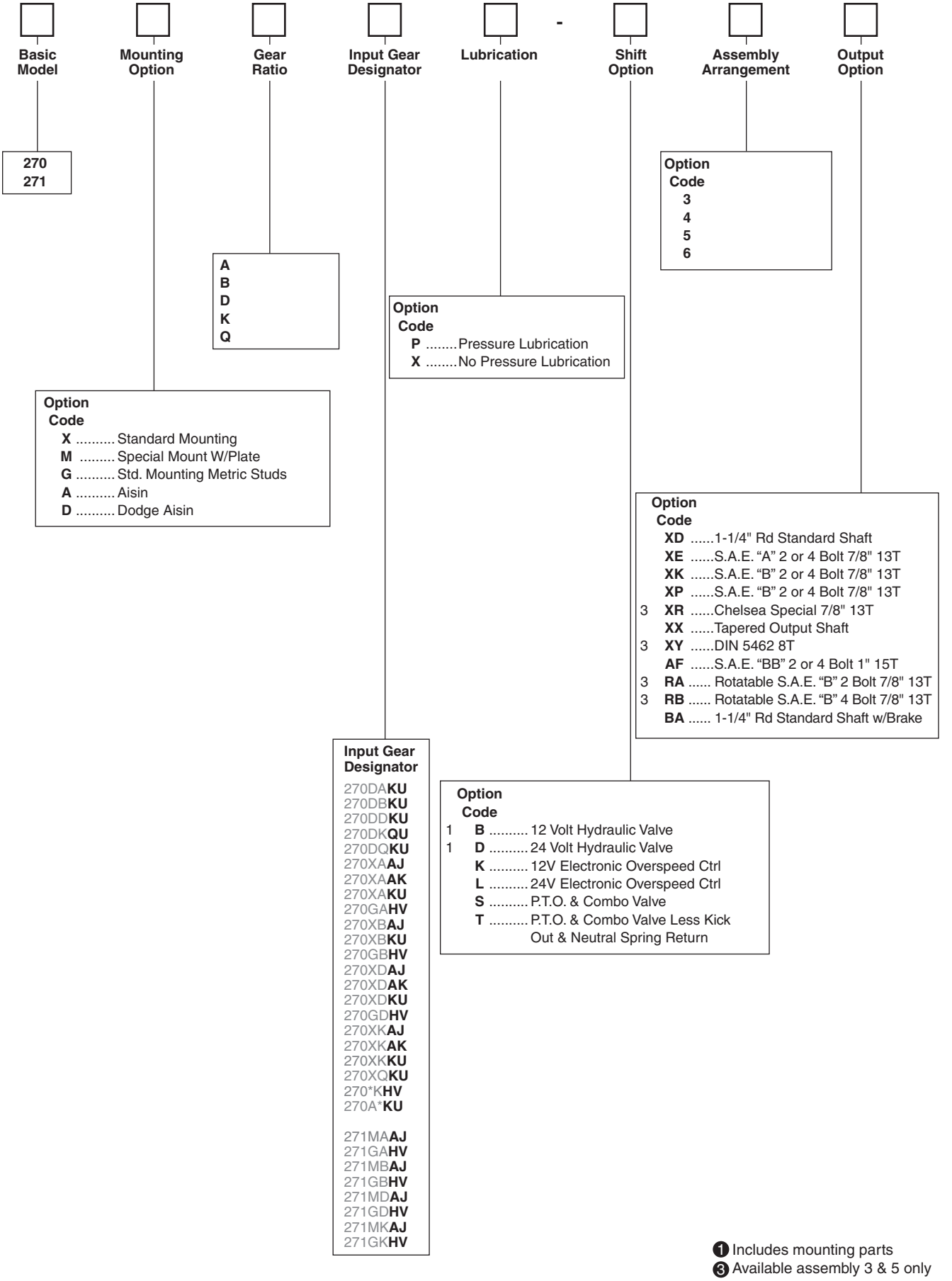

❶ Includes mounting parts
❸ Available assembly 3 & 5 only

Parker Hannifin Corporation
Chelsea Products Division
Olive Branch, MS 38654 USA

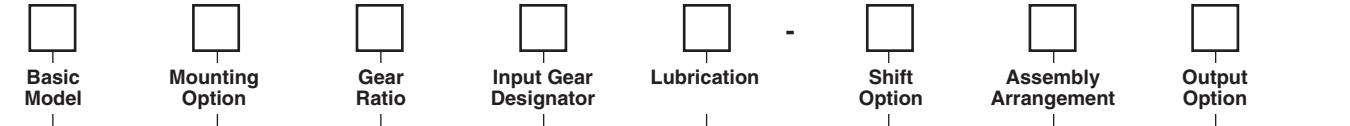

Basic Model

277
278

Mounting Option

Option Code	
X	Standard Mounting 10 Bolt
H	Hino 338

Gear Ratio

B
D
G
M
S

Input Gear Designator

Input Gear Designator	Input Gear Part Number
5	277XB**FJ**P
5	277XD**FJ**P
5	277XG**FJ**P
5	277XM**FJ**P
5	277XS**FJ**P
	277XB**KV**P
	277XD**KV**P
	277XG**KV**P
	277XM**KV**P
	277XS**KV**P
5	277SB**FJ**P ..... Super Torque™
5	277SD**FJ**P ..... Super Torque™
5	277SG**FJ**P ..... Super Torque™
5	277SM**FJ**P ..... Super Torque™
5	277SS**FJ**P ..... Super Torque™
5	277SB**KV**P ..... Super Torque™
	277SD**KV**P ..... Super Torque™
	277SG**KV**P ..... Super Torque™
	277SM**KV**P ..... Super Torque™
	277SS**KV**P ..... Super Torque™
5	278XB**FJ**P
5	278XD**FJ**P
5	278XG**FJ**P
5	278XM**FJ**P
5	278XS**FJ**P
5	278XT**FJ**P
	278XB**KV**P
	278XD**KV**P
	278XG**KV**P
	278XM**KV**P
	278XS**KV**P
5	278SB**FJ**P ..... Super Torque™
5	278SD**FJ**P ..... Super Torque™
5	278SG**FJ**P ..... Super Torque™
5	278SM**FJ**P ..... Super Torque™
5	278SS**FJ**P ..... Super Torque™
5	278ST**FJ**P ..... Super Torque™
	278SB**KV**P ..... Super Torque™
	278SD**KV**P ..... Super Torque™
	278SG**KV**P ..... Super Torque™
	278SM**KV**P ..... Super Torque™
	278SS**KV**P ..... Super Torque™

Lubrication

Option Code	
P	Pressure Lube
14 **R**	Pressure Lube & Valve Body Rot. 120°
W	Wetspline & Pressure Lube

Shift Option

Option Code	
B	12V Hydraulic Valve
D	24V Hydraulic Valve
15 **G**	12V Remote Hydraulic Valve
15 **H**	24V Remote Hydraulic Valve
K	12V Electronic Overspeed Ctrl
L	24V Electronic Overspeed Ctrl
S	P.T.O. & Combo Valve
T	P.T.O. & Combo Valve Less Kick Out & Neutral Spring Return

Assembly Arrangement

Option Code	
3	278 Series Only
5	277 Series Only

Output Option

Option Code	
XD	1-1/4" Rd Standard Shaft
XE	S.A.E. "A" 2 Bolt 5/8" 9T
XK	S.A.E. "B" 2 or 4 Bolt 7/8" 13T
XP	S.A.E. "A" 2 Bolt 7/8" 13T
XR	Chelsea Special 7/8" 13T
XX	Tapered Output Shaft
XY	DIN 5462 8T
AF	S.A.E. "BB" 2 or 4 Bolt 1" 15T
RA	Rotatable S.A.E. "B" 2 Bolt 7/8" 13T
RB	Rotatable S.A.E. "B" 4 Bolt 7/8" 13T
RF	Rotatable S.A.E. "BB" 2 Bolt 1" 15T
RG	Rotatable S.A.E. "BB" 4 Bolt 1" 15T
PF	Rotatable S.A.E. "B" 2 Bolt 1" 15T for Parker Sculptured Pump
PA	Rotatable S.A.E. "B" 2 Bolt 7/8" 13T for Parker Sculptured Pump
BA	1-1/4" Rd Standard Shaft w/Brake

❺ Automatically pressure lubed
⓮ Available on 277/278 Series shift options B, D, K, & L
⓯ The remote mount solenoid option can not utilize the E.O.C. option

Parker Hannifin Corporation
Chelsea Products Division
Olive Branch, MS 38654 USA

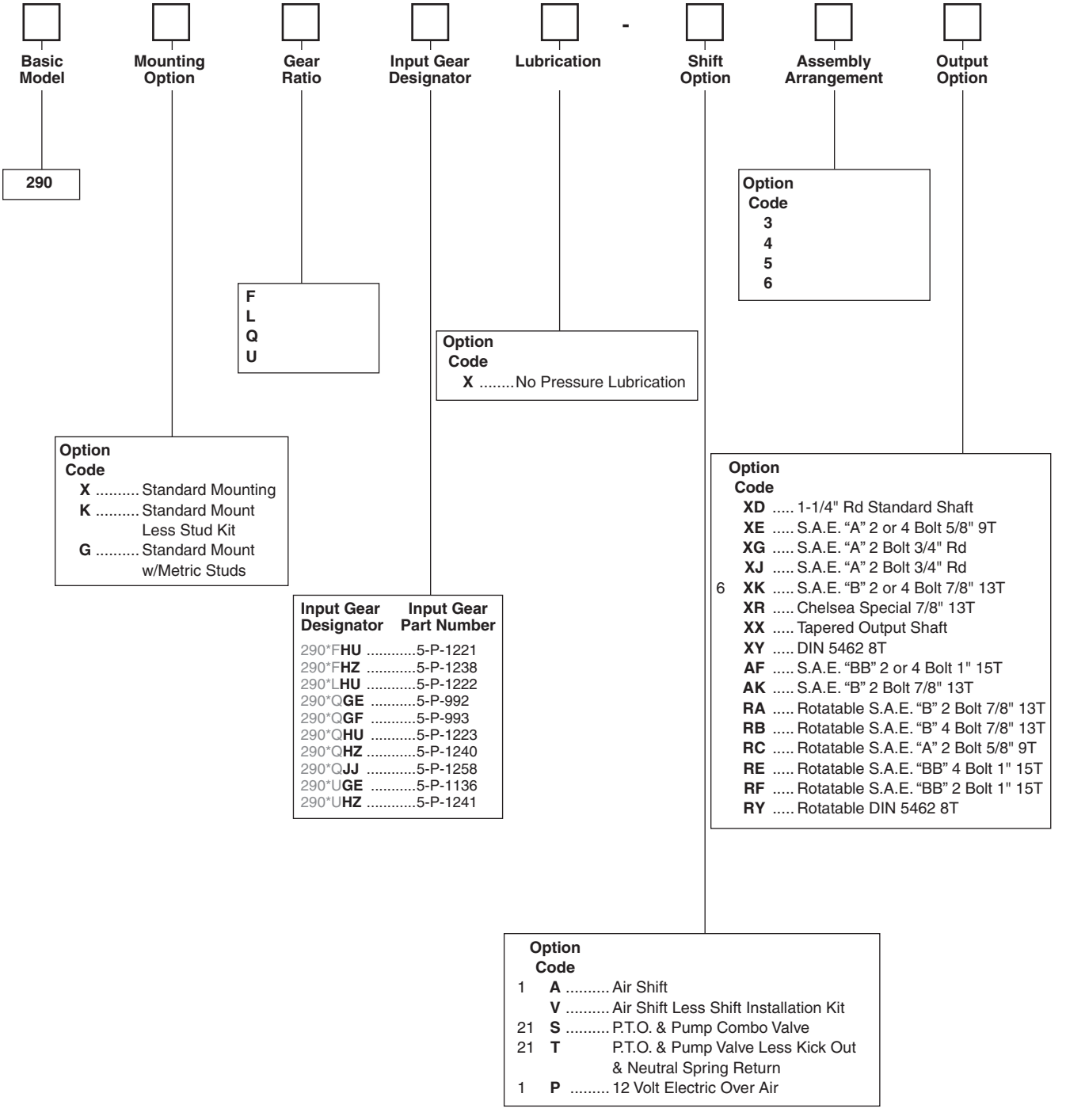

❶ Includes mounting parts
❻ Available on "Q" ratio only
㉑ Includes installation kit, console sold separately

Parker Hannifin Corporation
Chelsea Products Division
Olive Branch, MS 38654 USA

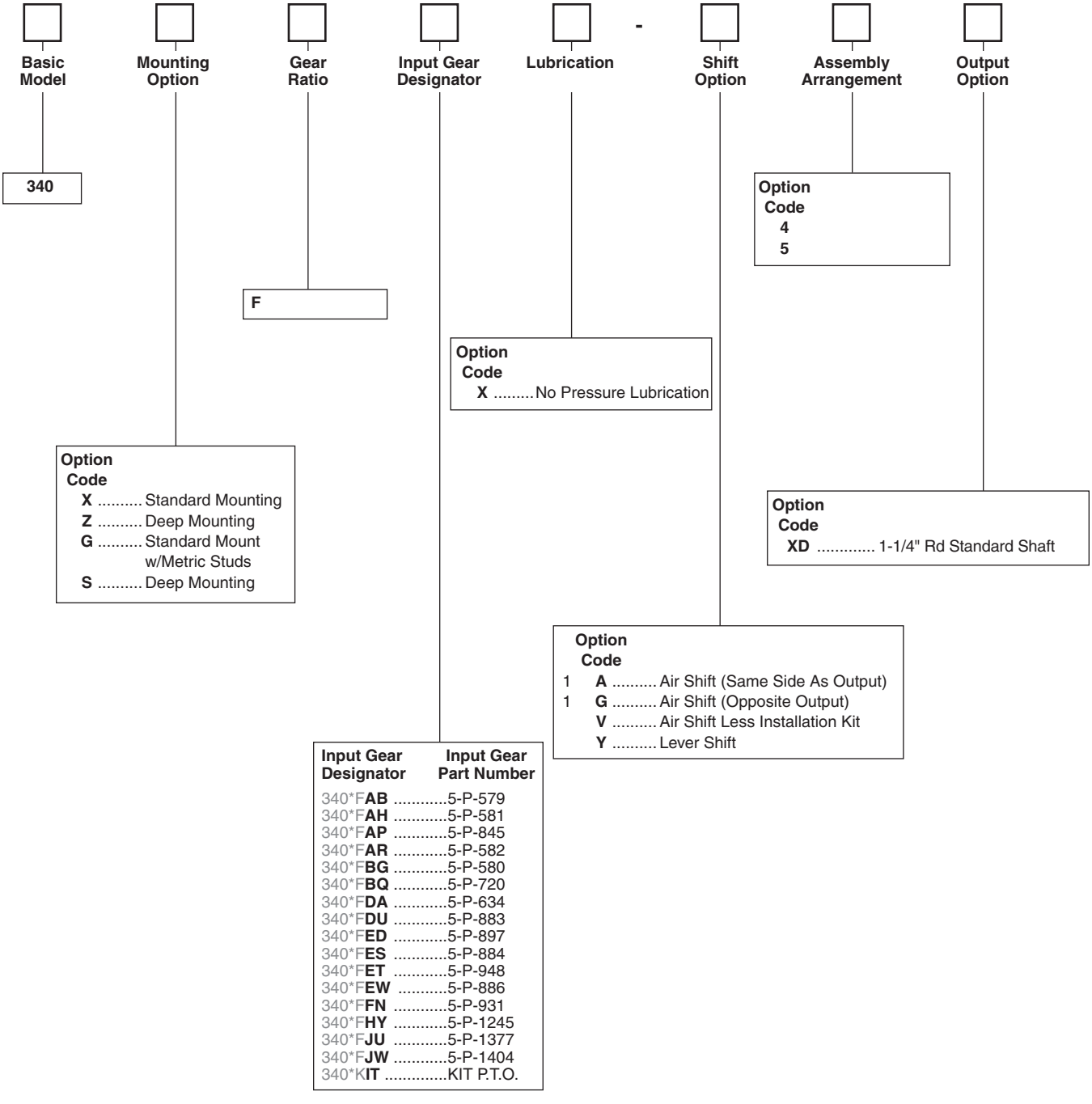

❶ Includes mounting parts

Parker Hannifin Corporation
Chelsea Products Division
Olive Branch, MS 38654 USA

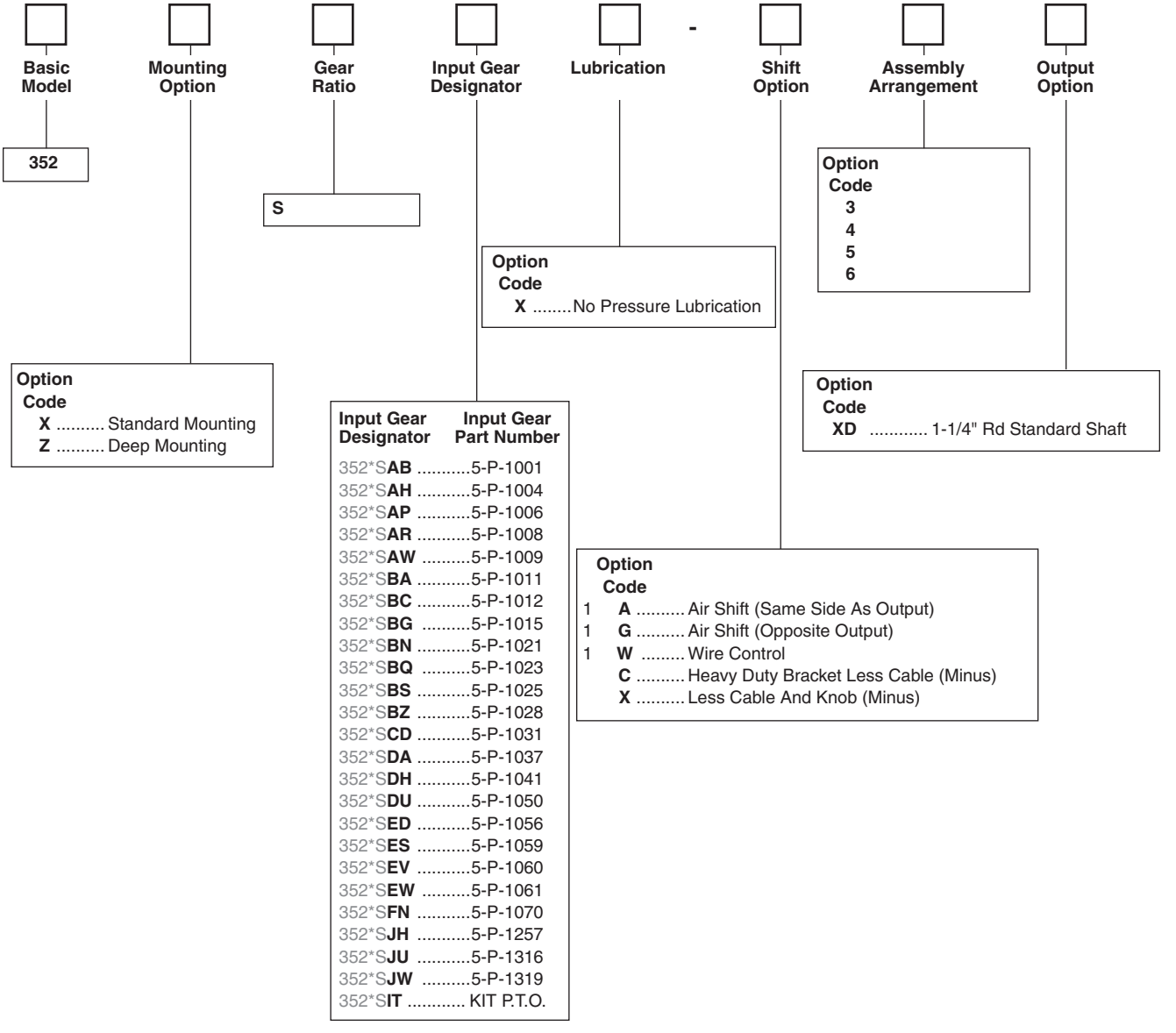

❶ Includes mounting parts

Parker Hannifin Corporation
Chelsea Products Division
Olive Branch, MS 38654 USA

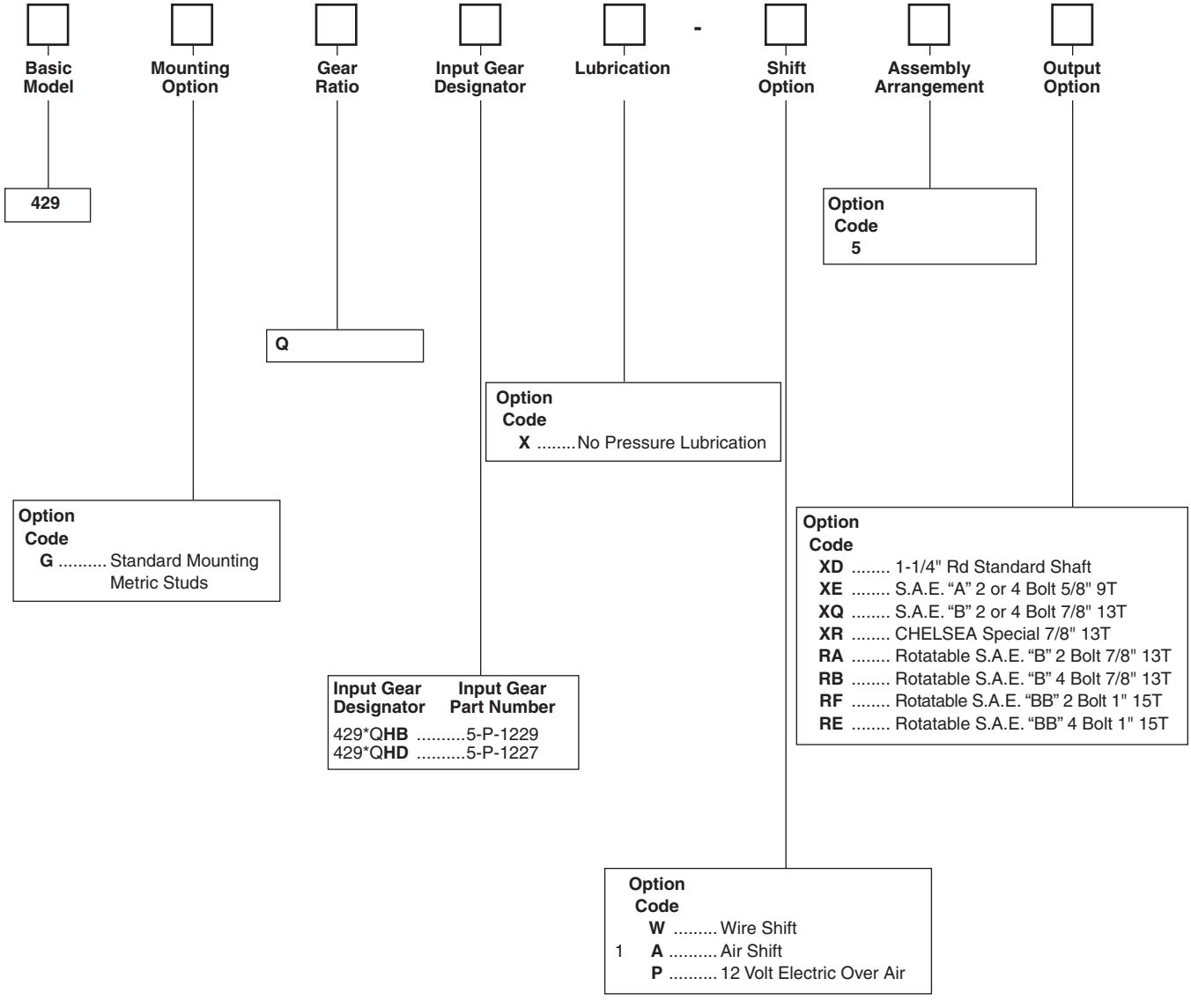

❶ Includes mounting parts

Parker Hannifin Corporation
Chelsea Products Division
Olive Branch, MS 38654 USA

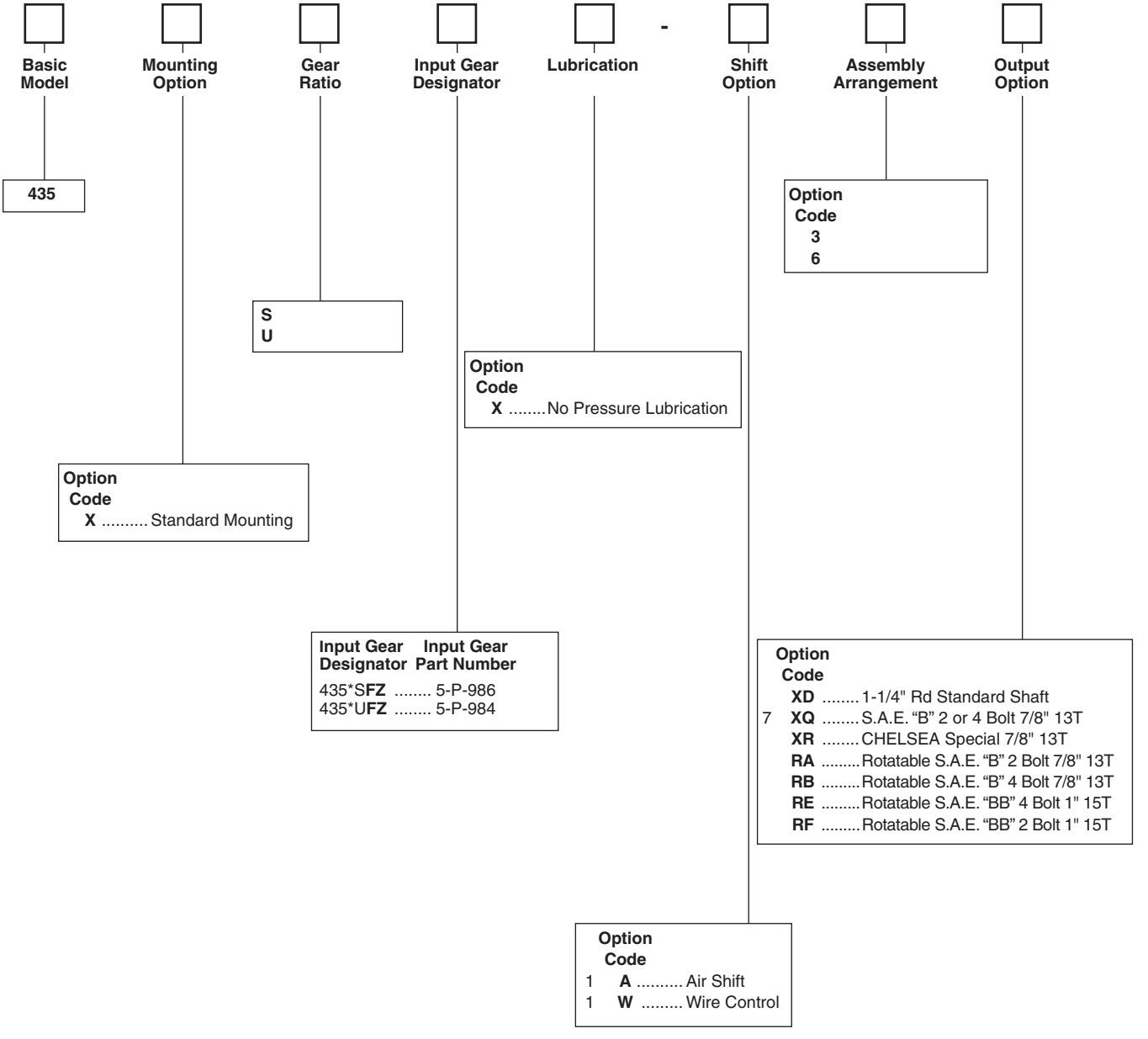

❶ Includes mounting parts
❼ Available assembly "3" only

Parker Hannifin Corporation
Chelsea Products Division
Olive Branch, MS 38654 USA

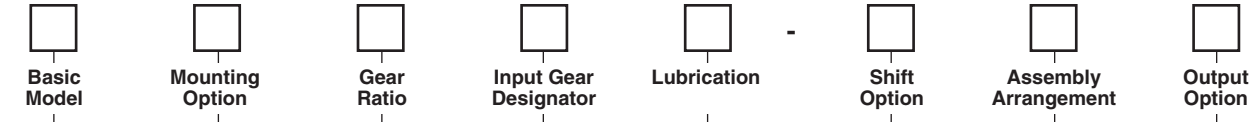

442

Option Code	
A	0.391:1
C	0.489:1
F	0.520:1
H	0.716:1
L	0.691:1
Q	0.865:1
R	0.941:1
S	1.205:1
U	1.410:1
W	1.713:1
X	2.000:1

Option Code	
P	Pressure Lube
X	No Pressure Lube

Option Code	
3	
4	
5	
6	

Option Code		
1	**A**	Air Shift
	V	Air Shift Less Installation Kit
21	**S**	P.T.O. & Pump Combo Valve
21	**T**	P.T.O. & Pump Valve Less Kick Out & Neutral Spring Return
1	**W**	Cable Shift
	C	Heavy Duty Bracket Less Cable (Minus)
	M	Constant Mesh
1	**P**	12 Volt Electric Over Air
	X	Less Cable and Knob (Minus)
	H	Less Wire Shift Cover (Minus)

Option Code	
G	Standard Mount w/Metric Studs
K	Standard Mount Less Stud Kit
L	Deep Mount Less Stud Kit
X	Standard Mount
Z	Deep Mount

	Input Gear Designator	Input Gear Part Number
	442**AB	5-P-1001
	442**AH	5-P-1004
	442**AP	5-P-1006
	442**AR	5-P-1008
	442**BG	5-P-1015
	442**BQ	5-P-1023
	442**BZ	5-P-1028
	442**DA	5-P-1037
	442**DU	5-P-1050
	442**ES	5-P-1059
	442**EV	5-P-1060
	442**EW	5-P-1061
	442**FC	5-P-1064
	442**FN	5-P-1070
9	442**GR	5-P-1157
	442**GY	5-P-1184
	442**GZ	5-P-1185
	442**HD	5-P-1189
	442**HG	5-P-1192
	442**HH	5-P-1193
	442**HL	5-P-1196
	442**HQ	5-P-1200
	442**HY	5-P-1237
	442**JE	5-P-1249
	442**JG	5-P-1256

Input Gear Designator	Input Gear Part Number
442**JH	5-P-1257
442**JK	5-P-1261
442**JU	5-P-1316
442**JW	5-P-1319
442**JY	5-P-1312
442**KB	5-P-1321
442*AAB	5-P-1279
442*AAH	5-P-1280
442*AAP	5-P-1282
442*AAR	5-P-1283
442*ADA	5-P-1284
442*AES	5-P-1285
442*BAH	5-P-1418
442*CAB	5-P-1286
442*CAH	5-P-1287
442*CAP	5-P-1289
442*CAR	5-P-1290
442*CDA	5-P-1291
442*CES	5-P-1292
442*FAB	5-P-1076
442*FAH	5-P-1077
442*FAP	5-P-1079
442*FAR	5-P-1080
442*FBC	5-P-1081
442*FBG	5-P-1082

Input Gear Designator	Input Gear Part Number
442*FBQ	5-P-1084
442*FDA	5-P-1085
442*FDU	5-P-1088
442*FED	5-P-1090
442*FES	5-P-1092
442*FEV	5-P-1094
442*FEW	5-P-1095
442*FFN	5-P-1097
442*FGS	5-P-1151
442*FHV	5-P-1300
442*FJU	5-P-1317
442*FJW	5-P-1320
442*HAH	5-P-1364
442*HDA	5-P-1365
442*AIT	KIT P.T.O.
442*CIT	KIT P.T.O.
442*FIT	KIT P.T.O.
442*HIT	KIT P.T.O.
442*LIT	KIT P.T.O.
442*QIT	KIT P.T.O.
442*RIT	KIT P.T.O.
442*SIT	KIT P.T.O.
442*UIT	KIT P.T.O.
442*WIT	KIT P.T.O.
442*XIT	KIT P.T.O.

Option Code	
XD	1-1/4" Rd Standard Shaft
XE	S.A.E. "A" 2 or 4 Bolt 5/8" 9T
XG	S.A.E. "A" 2 Bolt 3/4" Rd
XJ	S.A.E. "A" 2 Bolt 3/4" Rd
XK	S.A.E. "B" 2 or 4 Bolt 7/8" 13T
XQ	S.A.E. "B" 2 or 4 Bolt 7/8" 13T
XR	Chelsea Special 7/8" 13T
XX	Tapered Output Shaft
XY	DIN 5462 8T
AK	S.A.E. "B" 2 Bolt 7/8" 13T
AF	S.A.E. "BB" 2 or 4 Bolt 1" 15T
AZ	S.A.E. "B" 4 Bolt 1-1/4" 14T
RA	Rotatable S.A.E. "B" 2 Bolt 7/8" 13T
RB	Rotatable S.A.E. "B" 4 Bolt 7/8" 13T
RC	Rotatable S.A.E. "A" 2 Bolt 5/8" 9T
RD	Rotatable S.A.E. "A" 2 Bolt 7/8" 13T
RE	Rotatable S.A.E. "BB" 4 Bolt 1" 15T
RF	Rotatable S.A.E. "BB" 2 Bolt 1" 15T
RY	Rotatable DIN 5462 8T
GA	Greaseable Rotatable "B" 2 Bolt 7/8" 13T
GB	Greaseable Rotatable "B" 4 Bolt 7/8" 13T
GF	Greaseable S.A.E. "BB" 2 or 4 Bolt 1" 15T
GH	Greaseable Rot. S.A.E. "BB" 2 Bolt 1" 15T
GK	Greaseable S.A.E. "B" 2 or 4 Bolt 7/8" 13T
GP	Greaseable S.A.E. "B" 2 or 4 Bolt 7/8" 13T
GQ	Greaseable S.A.E. "B" 2 or 4 Bolt 7/8" 13T
GR	Greaseable Chelsea Special 7/8" 13T
GY	Greaseable DIN 5462 8T
GZ	Greaseable S.A.E. "B" 4 Bolt 1-1/4" 14T
LA	S.A.E. "B" 2 Bolt w/Self Lube Pump 7/8" 13T
LB	S.A.E. "A" 2 Bolt w/Self Lube Pump 7/8" 13T
LC	S.A.E. "B" 2 or 4 Bolt w/Self Lube 7/8" 13T
LD	1-1/4" Rd w/Self Lube Pump
LF	S.A.E. "B" 2 or 4 Bolt w/Self Lube 7/8" 13T

❶ Includes mounting parts
❾ Includes adapter 329181-2X
❷❶ Includes installation kit, console sold separately

Parker Hannifin Corporation
Chelsea Products Division
Olive Branch, MS 38654 USA

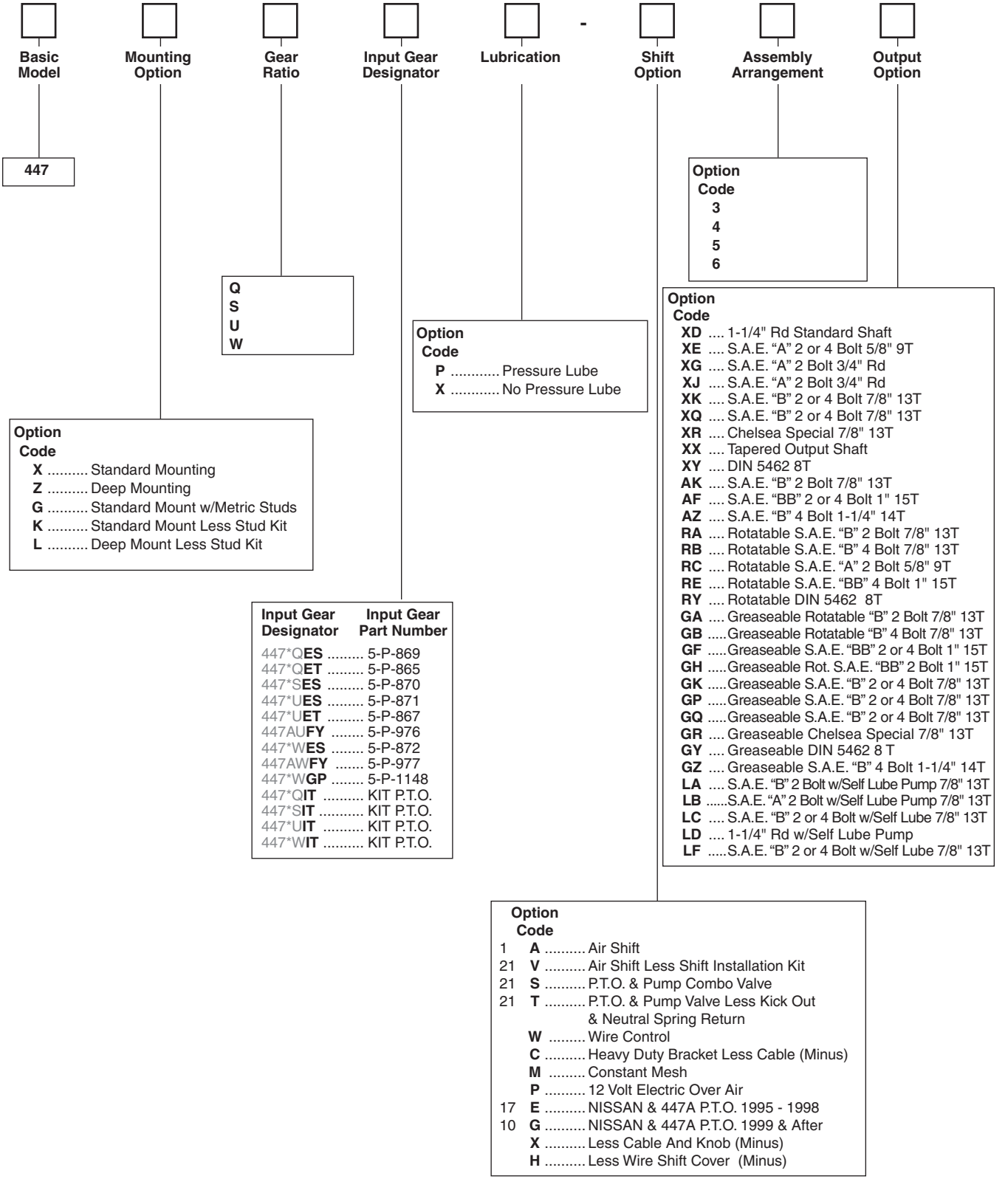

❶ Includes mounting parts
❿ Must use with the 447A P.T.O. for Nissan 1999 and after
⓱ Must use with the 447A P.T.O., for Nissan 1995 through 1998
㉑ Includes installation kit, console sold separately

Parker Hannifin Corporation
Chelsea Products Division
Olive Branch, MS 38654 USA

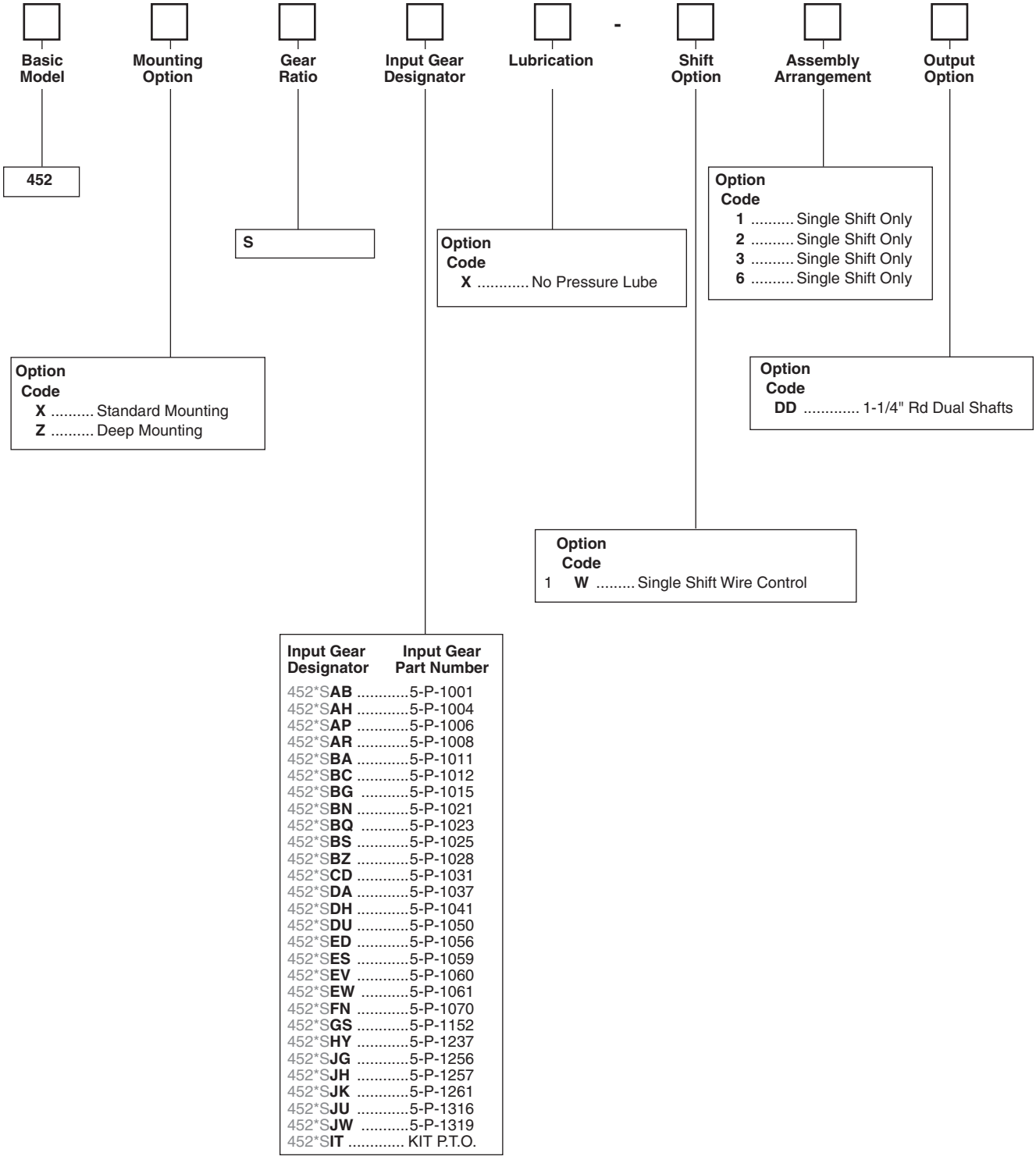

Input Gear Designator	Input Gear Part Number
452*S**AB**	5-P-1001
452*S**AH**	5-P-1004
452*S**AP**	5-P-1006
452*S**AR**	5-P-1008
452*S**BA**	5-P-1011
452*S**BC**	5-P-1012
452*S**BG**	5-P-1015
452*S**BN**	5-P-1021
452*S**BQ**	5-P-1023
452*S**BS**	5-P-1025
452*S**BZ**	5-P-1028
452*S**CD**	5-P-1031
452*S**DA**	5-P-1037
452*S**DH**	5-P-1041
452*S**DU**	5-P-1050
452*S**ED**	5-P-1056
452*S**ES**	5-P-1059
452*S**EV**	5-P-1060
452*S**EW**	5-P-1061
452*S**FN**	5-P-1070
452*S**GS**	5-P-1152
452*S**HY**	5-P-1237
452*S**JG**	5-P-1256
452*S**JH**	5-P-1257
452*S**JK**	5-P-1261
452*S**JU**	5-P-1316
452*S**JW**	5-P-1319
452*S**IT**	KIT P.T.O.

❶ Includes mounting parts

Parker Hannifin Corporation
Chelsea Products Division
Olive Branch, MS 38654 USA

Assembly Options

Six Bolt P.T.O. With Eight Bolt Flange
489 Series

Basic Model

489

Mounting Option

Option Code	
G	Standard Mount w/Metric Stud Kit
X	Standard Mount
Z	Deep Mount

Gear Ratio

A	0.391:1
C	0.489:1
F	0.520:1
H	0.716:1
L	0.691:1
Q	0.865:1
R	0.941:1
S	1.205:1
U	1.410:1
W	1.713:1
X	2.000:1

Input Gear Designator

Input Gear Designator	Input Gear Part Number
489**AB	5-P-1001
489**AH	5-P-1004
489**AR	5-P-1008
489**BG	5-P-1015
489**DA	5-P-1037
489**DU	5-P-1050
489**EV	5-P-1060
489*AAB	5-P-1279
489*AAH	5-P-1280
489*AAR	5-P-1283
489*ADA	5-P-1284
489*CAB	5-P-1286
489*CAH	5-P-1287
489*CAR	5-P-1290
489*CDA	5-P-1291
489*FAB	5-P-1076
489*FAH	5-P-1077
489*FAR	5-P-1080
489*FBG	5-P-1082
489*FDA	5-P-1085
489*FDU	5-P-1088
489*FEV	5-P-1094
489*HAH	5-P-1364
489*HDA	5-P-1365
489*AIT	KIT P.T.O.
489*CIT	KIT P.T.O.
489*FIT	KIT P.T.O.
489*HIT	KIT P.T.O.
489*LIT	KIT P.T.O.
489*QIT	KIT P.T.O.
489*RIT	KIT P.T.O.
489*SIT	KIT P.T.O.
489*UIT	KIT P.T.O.
489*WIT	KIT P.T.O.
489*XIT	KIT P.T.O.

Lubrication

Option Code	
P	Pressure Lube
X	No Pressure Lube

Shift Option

Option Code		
1	A	Air Shift
	V	Air Shift Less Installation Kit
21	S	P.T.O. & Pump Combo Valve
21	T	P.T.O. & Pump Valve Less Kick Out & Neutral Spring Return
1	W	Cable Shift
	C	Heavy Duty Bracket Less Cable (Minus)
	M	Constant Mesh
1	P	12 Volt Electric Over Air
	X	Less Cable And Knob (Minus)
	H	Less Wire Shift Cover (Minus)

Assembly Arrangement

Option Code
3
4
5
6

Output Option

Option Code	
XD	1-1/4" Rd Standard Shaft
XE	S.A.E. "A" 2 or 4 Bolt 5/8" 9T
XG	S.A.E. "A" 2 Bolt 3/4" Rd
XJ	S.A.E. "A" 2 Bolt 3/4" Rd
XK	S.A.E. "B" 2 or 4 Bolt 7/8" 13T
XQ	S.A.E. "B" 2 or 4 Bolt 7/8" 13T
XR	Chelsea Special 7/8" 13T
XX	Tapered Output Shaft
XY	DIN 5462 8T
AK	S.A.E. "B" 2 Bolt 7/8" 13T
AF	S.A.E. "BB" 2 or 4 Bolt 1" 15T
AZ	S.A.E. "B" 4 Bolt 1-1/4" 14T
RA	Rotatable S.A.E. "B" 2 Bolt 7/8" 13T
RB	Rotatable S.A.E. "B" 4 Bolt 7/8" 13T
RC	Rotatable S.A.E. "A" 2 Bolt 5/8" 9T
RE	Rotatable S.A.E. "BB" 4 Bolt 1" 15T
RY	Rotatable DIN 5462 8T
GA	Greaseable Rotatable "B" 2 Bolt 7/8" 13T
GB	Greaseable Rotatable "B" 4 Bolt 7/8" 13T
GF	Greaseable S.A.E. "BB" 2 or 4 Bolt 1" 15T
GH	Greaseable Rot. S.A.E. "BB" 2 Bolt 1" 15T
GK	Greaseable S.A.E. "B" 2 or 4 Bolt 7/8" 13T
GP	Greaseable S.A.E. "B" 2 or 4 Bolt 7/8" 13T
GQ	Greaseable S.A.E. "B" 2 or 4 Bolt 7/8" 13T
GR	Greaseable Chelsea Special 7/8" 13T
GY	Greaseable DIN 5462 8T
GZ	Greaseable S.A.E. "B" 4 Bolt 1-1/4" 14T
LA	S.A.E. "B" 2 Bolt w/Self Lube Pump 7/8" 13T
LB	S.A.E. "A" 2 Bolt w/Self Lube Pump 7/8" 13T
LC	S.A.E. "B" 2 or 4 Bolt w/Self Lube 7/8" 13T
LD	1-1/4" Rd w/Self Lube Pump
LF	S.A.E. "B" 2 or 4 Bolt w/Self Lube 7/8" 13T

❶ Includes mounting parts
❷ⓘ Includes installation kit, console sold separately

Parker Chelsea
Parker Hannifin Corporation
Chelsea Products Division
Olive Branch, MS 38654 USA

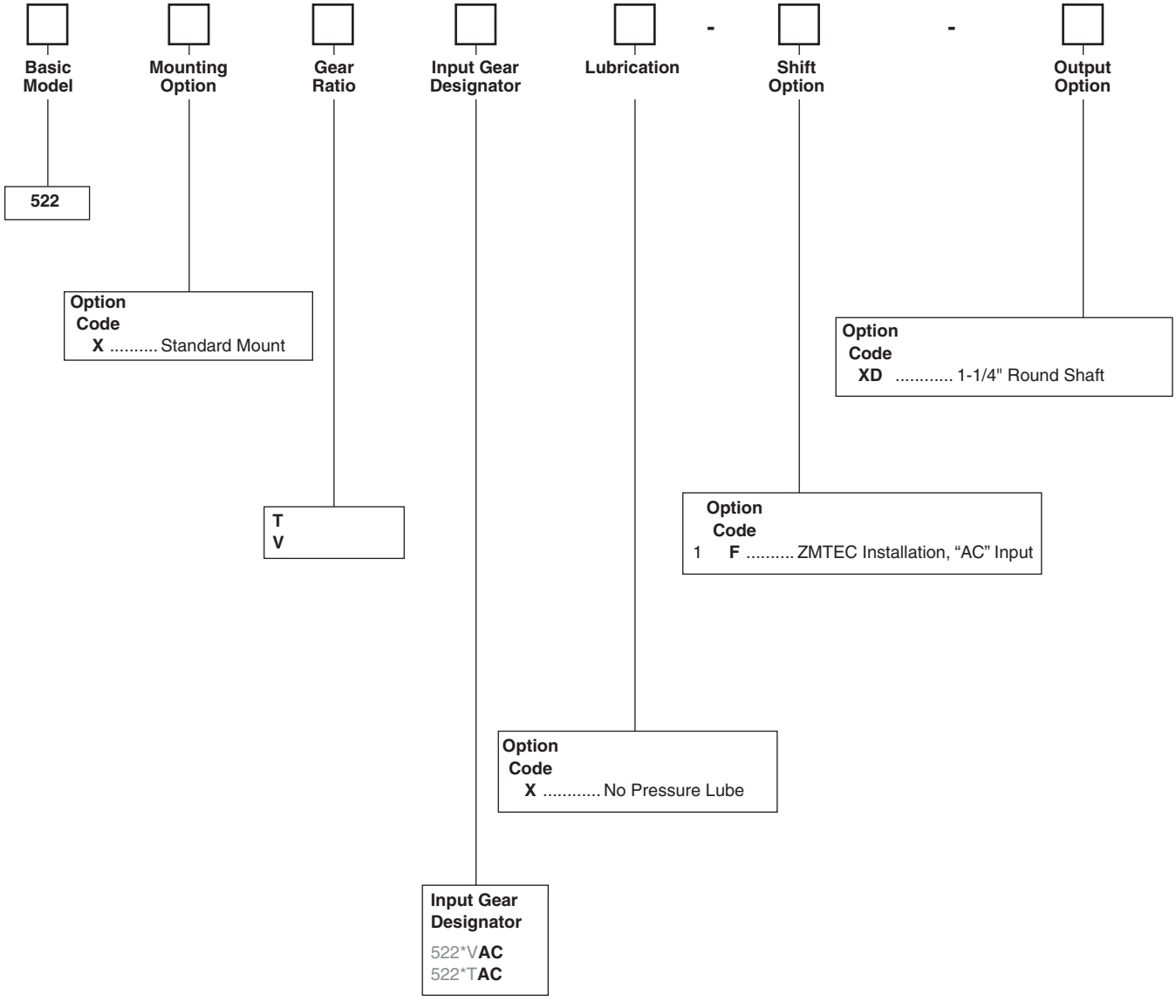

❶ Includes mounting parts

Parker Hannifin Corporation
Chelsea Products Division
Olive Branch, MS 38654 USA

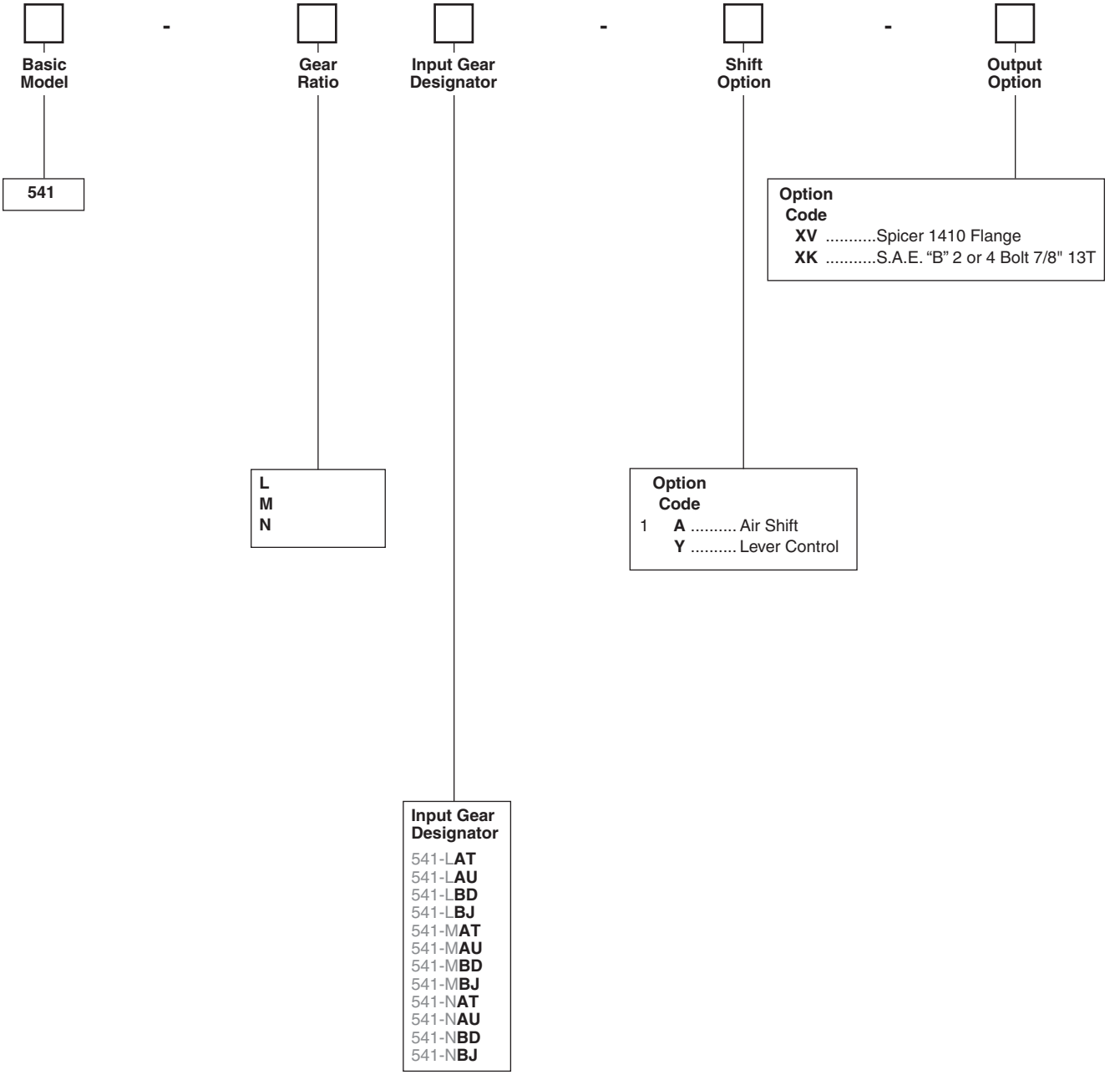

❶ Includes mounting parts

Parker Hannifin Corporation
Chelsea Products Division
Olive Branch, MS 38654 USA

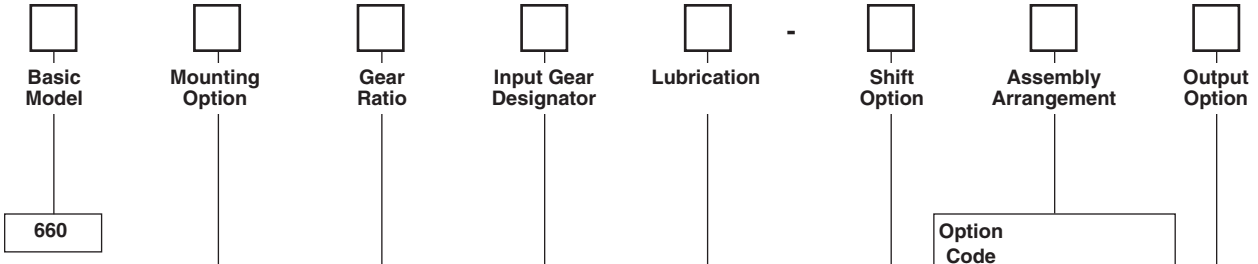

Option Code

- **X** ..... Standard Mount
- **Z** ..... Deep Mount
- **G** ..... Standard Mount w/Metric Studs
- **K** ..... Standard Mount Less Stud Kit
- **L** ..... Deep Mount Less Stud Kit

Input Gear Designator	Input Gear Part Number
660*F**AH**	5-P-1242
660*F**BG**	5-P-1325
660*F**DA**	5-P-1330
660*F**ED**	5-P-1335
660*F**JA**	5-P-1345
660*Q**AH**	5-P-1246
660*Q**BG**	5-P-1326
660*Q**DA**	5-P-1331
660*Q**ED**	5-P-1336
660*Q**JA**	5-P-1346
660*S**AH**	5-P-1322
660*S**BG**	5-P-1327
660*S**DA**	5-P-1332
660*S**ED**	5-P-1337
660*S**JA**	5-P-1347

Option Code

1	**A**	Air Shift
	V	Air Shift Less Installation Kit
21	**S**	P.T.O. & Pump Combo Valve
21	**T**	P.T.O. & Pump Valve Less Kick Out & Neutral Spring Return
21	**W**	Cable Shift
	C	Heavy Duty Bracket Less Cable (Minus)
	M	Constant Mesh
1	**P**	12 Volt Electric Over Air
	X	Less Cable And Knob (Minus)
	H	Less Wire Shift Cover (Minus)

Option Code

- **XD** ..... 1-1/4" Rd Standard Shaft
- **XE** ..... S.A.E. “A” 2 or 4 Bolt 5/8" 9T
- **XG** ..... S.A.E. “A” 2 Bolt 3/4" Rd
- **XJ** ..... S.A.E. “A” 2 Bolt 3/4" Rd
- **XK** ..... S.A.E. “B” 2 or 4 Bolt 7/8" 13T
- **XQ** ..... S.A.E. “B” 2 or 4 Bolt 7/8" 13T
- **XR** ..... Chelsea Special 7/8" 13T
- **XV** ..... 1140 Series Flange
- **XX** ..... Tapered Output Shaft
- **XY** ..... DIN 5462 8T
- **AK** ..... S.A.E. “B” 2 Bolt 7/8" 13T
- **AF** ..... S.A.E. “BB” 2 or 4 Bolt 1" 15T
- **AZ** ..... S.A.E. “B” 4 Bolt 1-1/4" 14T
- **RA** ..... Rotatable S.A.E. “B” 2 Bolt 7/8" 13T
- **RB** ..... Rotatable S.A.E. “B” 4 Bolt 7/8" 13T
- **RC** ..... Rotatable S.A.E. “A” 2 Bolt 5/8" 9T
- **RE** ..... Rotatable S.A.E. “B” 4 Bolt 1" 15T
- **RY** ..... Rotatable DIN 5462 8T
- **GA** ..... Greaseable Rotatable “B” 2 Bolt 7/8" 13T
- **GB** ..... Greaseable Rotatable “B” 4 Bolt 7/8" 13T
- **GF** ..... Greaseable S.A.E. “BB” 2 or 4 Bolt 1" 15T
- **GH** ..... Greaseable Rot. S.A.E. “BB” 2 Bolt 1" 15T
- **GK** ..... Greaseable S.A.E. “B” 2 or 4 Bolt 7/8" 13T
- **GP** ..... Greaseable S.A.E. “B” 2 or 4 Bolt 7/8" 13T
- **GQ** ..... Greaseable S.A.E. “B” 2 or 4 Bolt 7/8" 13T
- **GR** ..... Greaseable Chelsea Special 7/8" 13T
- **GY** ..... Greaseable DIN 5462 8T
- **GZ** ..... Greaseable S.A.E. “B” 4 Bolt 1-1/4"
- **LA** ..... S.A.E. “B” 2 Bolt w/Self Lube Pump 7/8" 13T
- **LB** ..... S.A.E. “A” 2 Bolt w/Self Lube Pump 7/8" 13T
- **LC** ..... S.A.E. “B” 2 or 4 Bolt w/Self Lube 7/8" 13T
- **LD** ..... 1-1/4" Rd w/Self Lube Pump
- **LF** ..... S.A.E. “B” 2 or 4 Bolt w/Self Lube 7/8" 13T

❶ Includes mounting parts
❷ Includes installation kit, console sold separately

Parker Hannifin Corporation
Chelsea Products Division
Olive Branch, MS 38654 USA

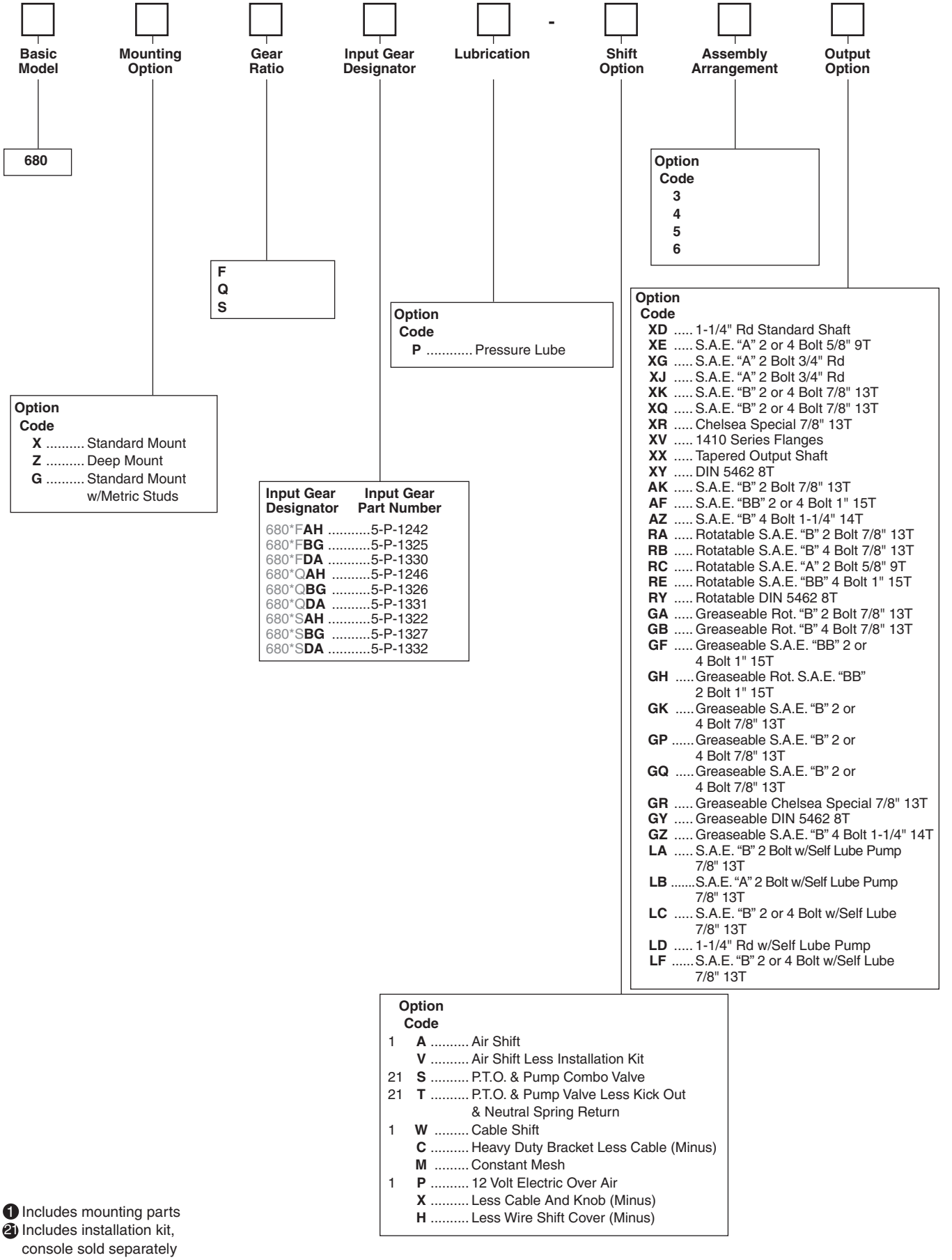

❶ Includes mounting parts
㉑ Includes installation kit, console sold separately

Parker Hannifin Corporation
Chelsea Products Division
Olive Branch, MS 38654 USA

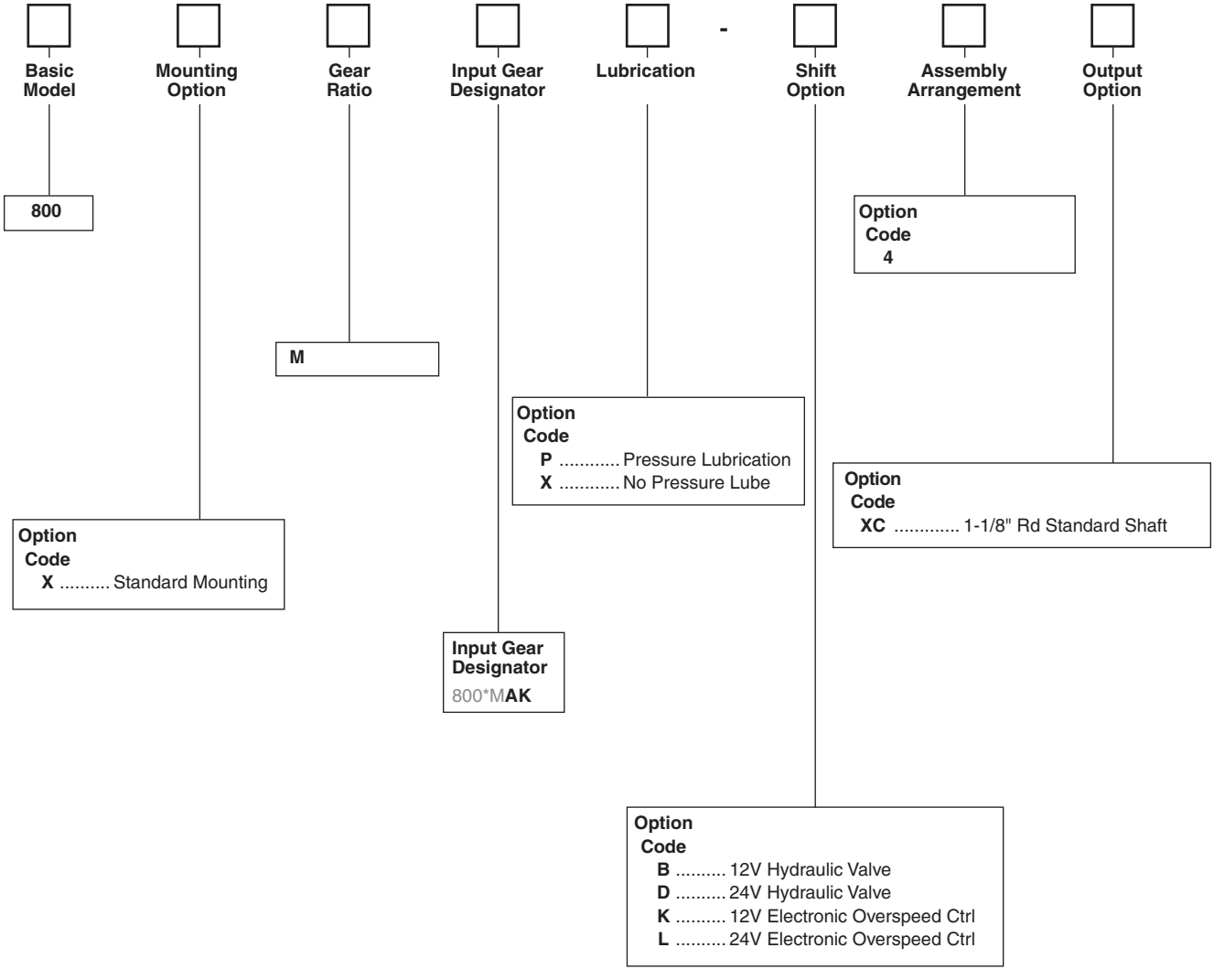

Parker Hannifin Corporation
Chelsea Products Division
Olive Branch, MS 38654 USA

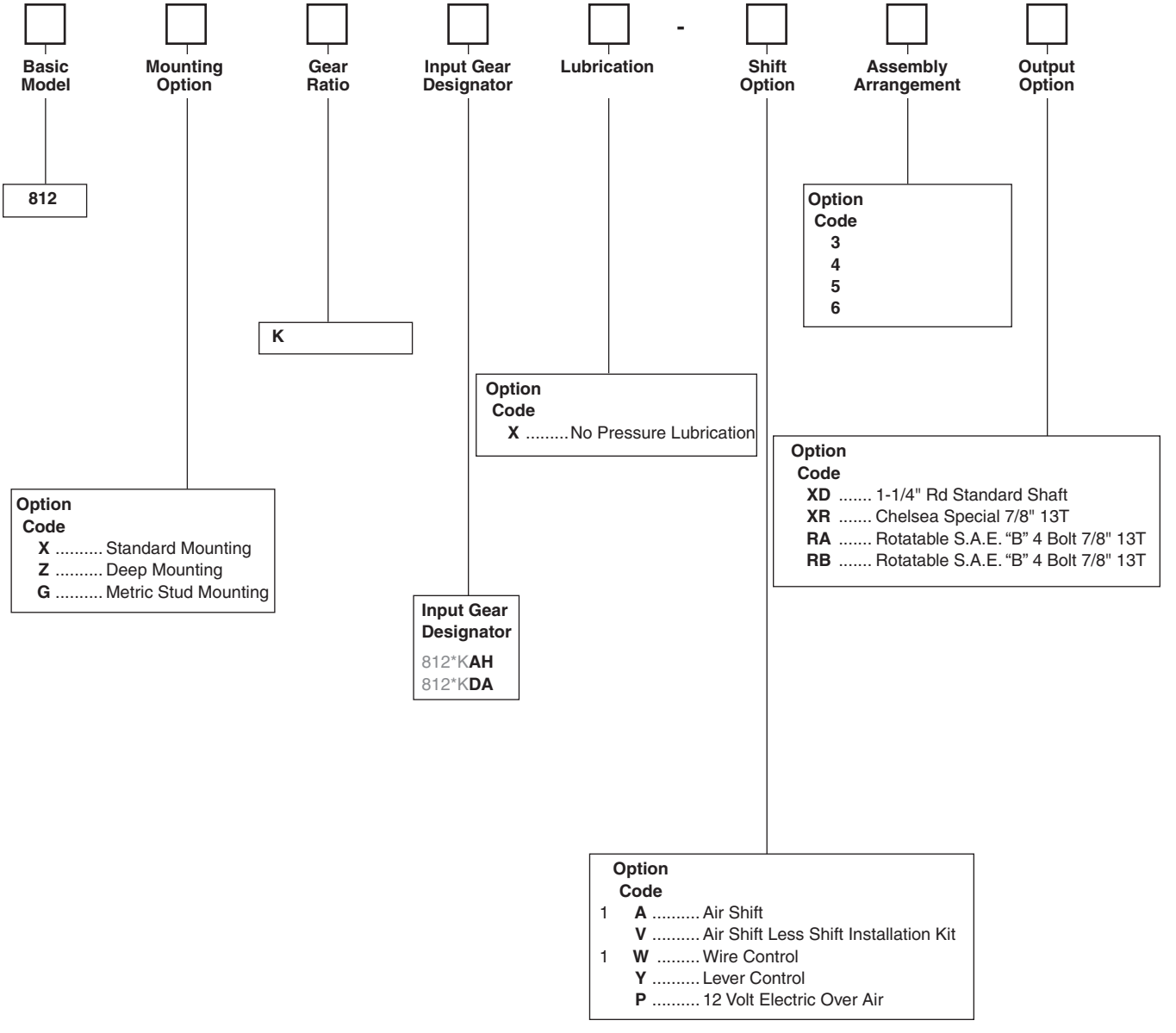

❶ Includes mounting parts

Parker Hannifin Corporation
Chelsea Products Division
Olive Branch, MS 38654 USA

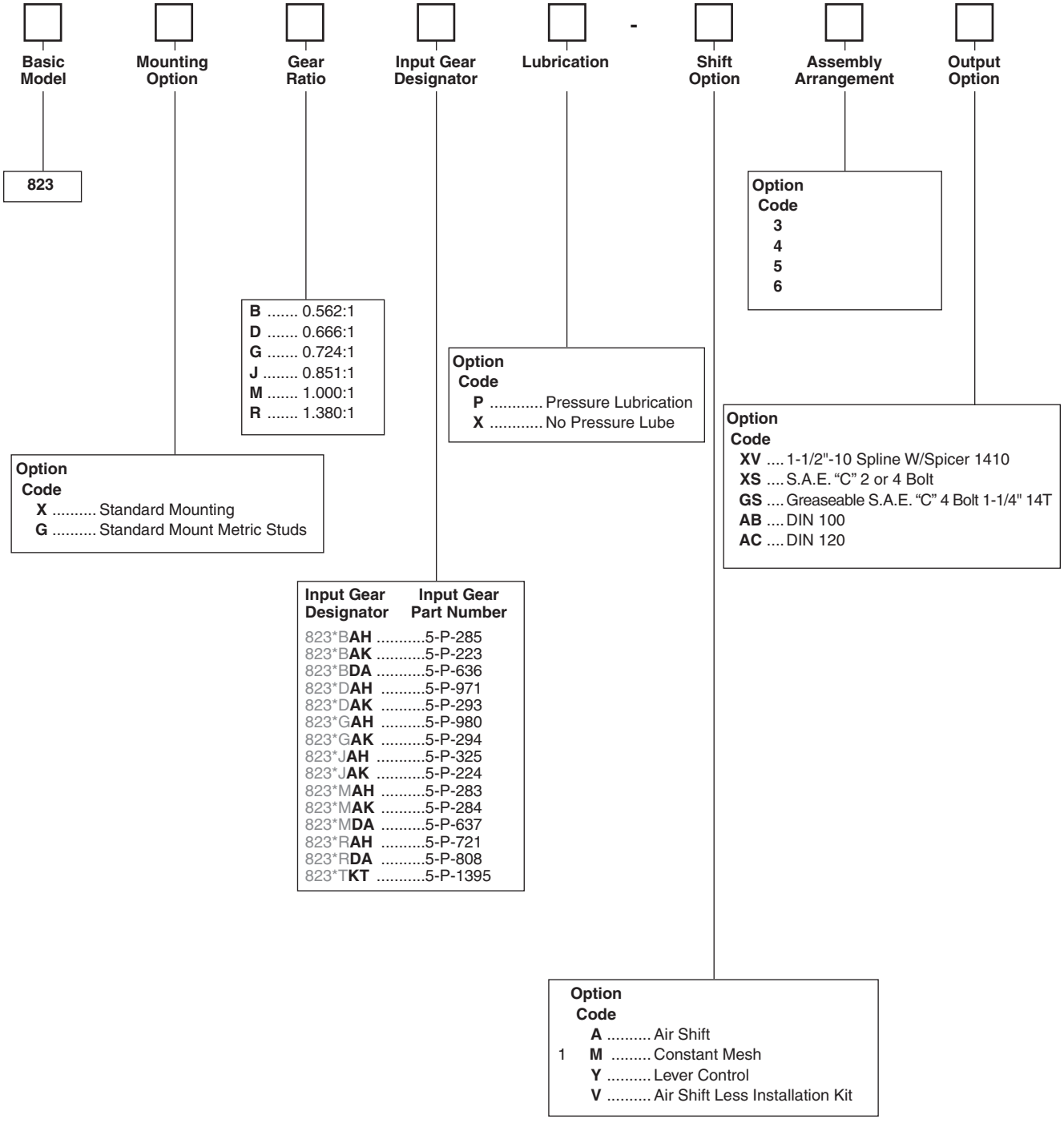

❶ Includes mounting parts

Parker Hannifin Corporation
Chelsea Products Division
Olive Branch, MS 38654 USA

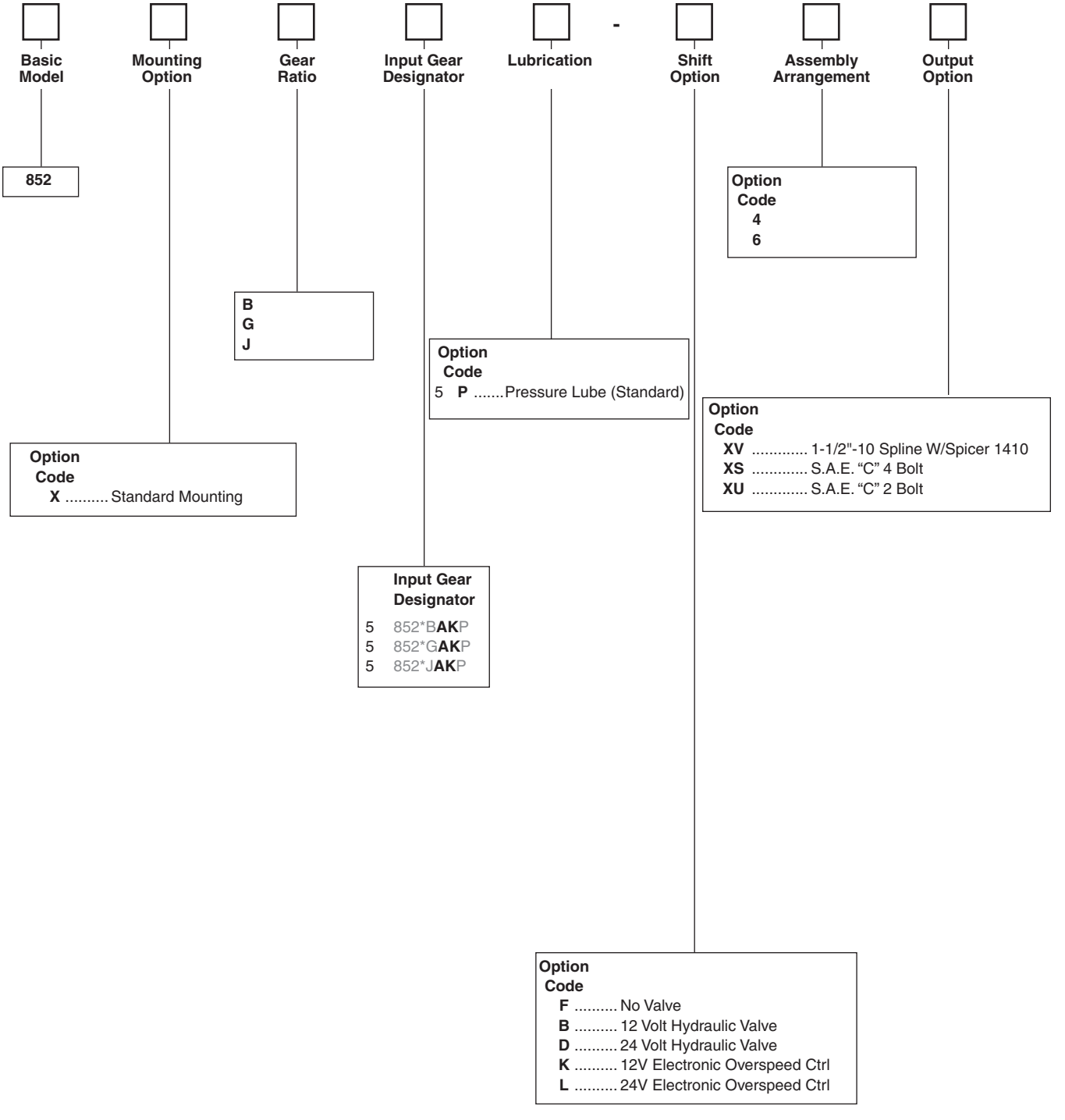

❺ Automatically pressure lubed

Parker Hannifin Corporation
Chelsea Products Division
Olive Branch, MS 38654 USA

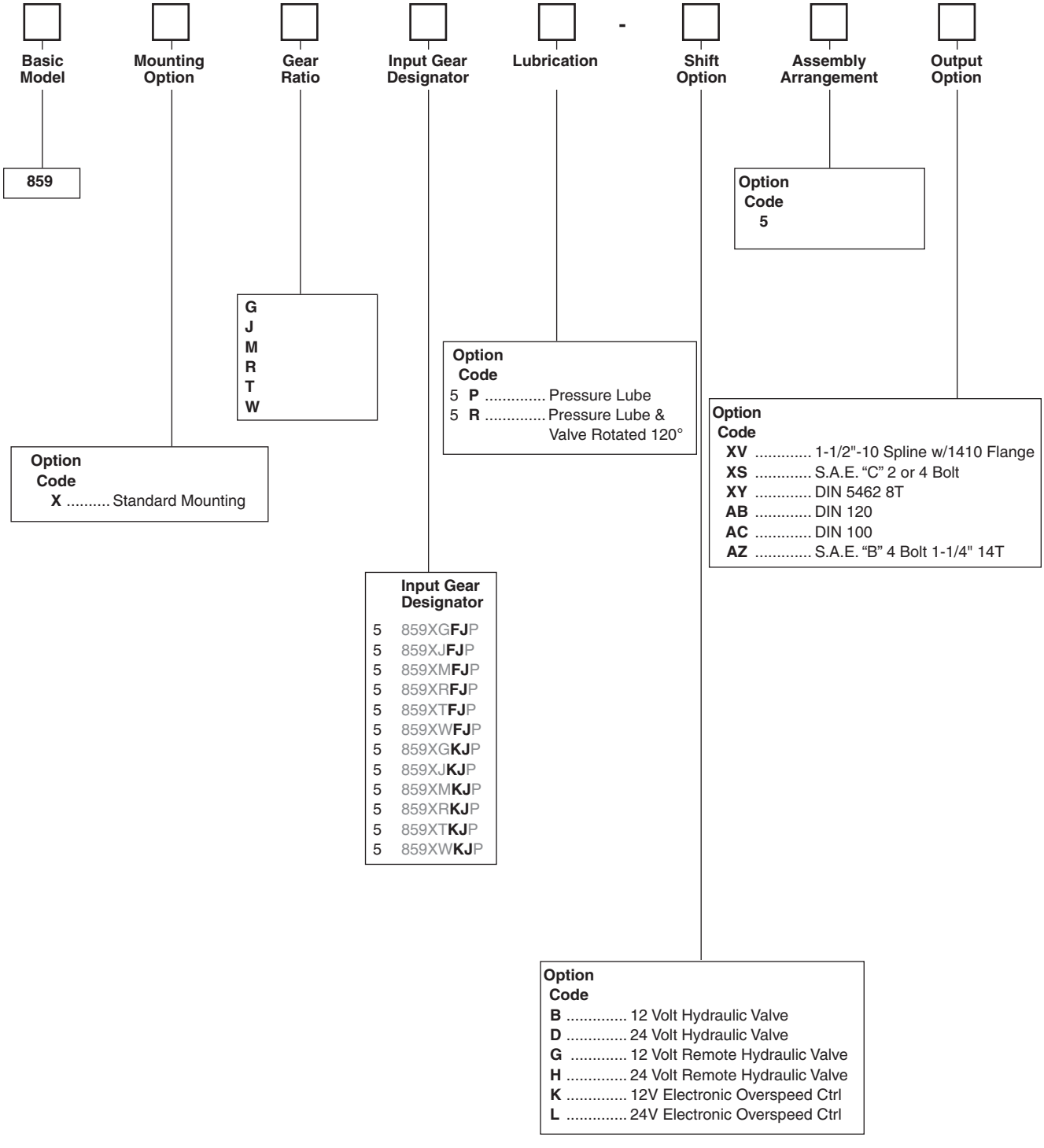

❺ Automatically pressure lubed

Parker Hannifin Corporation
Chelsea Products Division
Olive Branch, MS 38654 USA

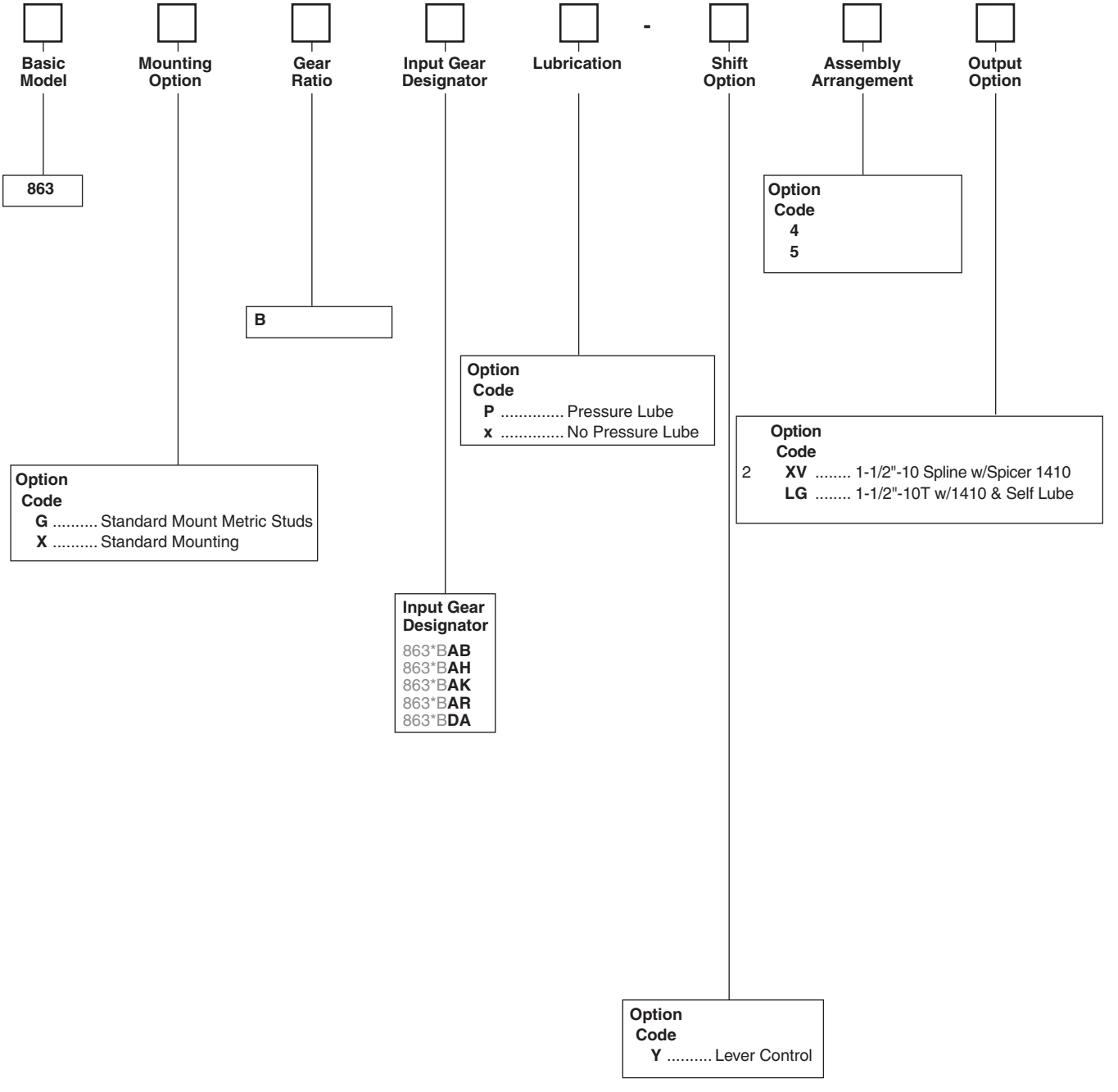

❷ Standard shaft

Parker Hannifin Corporation
Chelsea Products Division
Olive Branch, MS 38654 USA

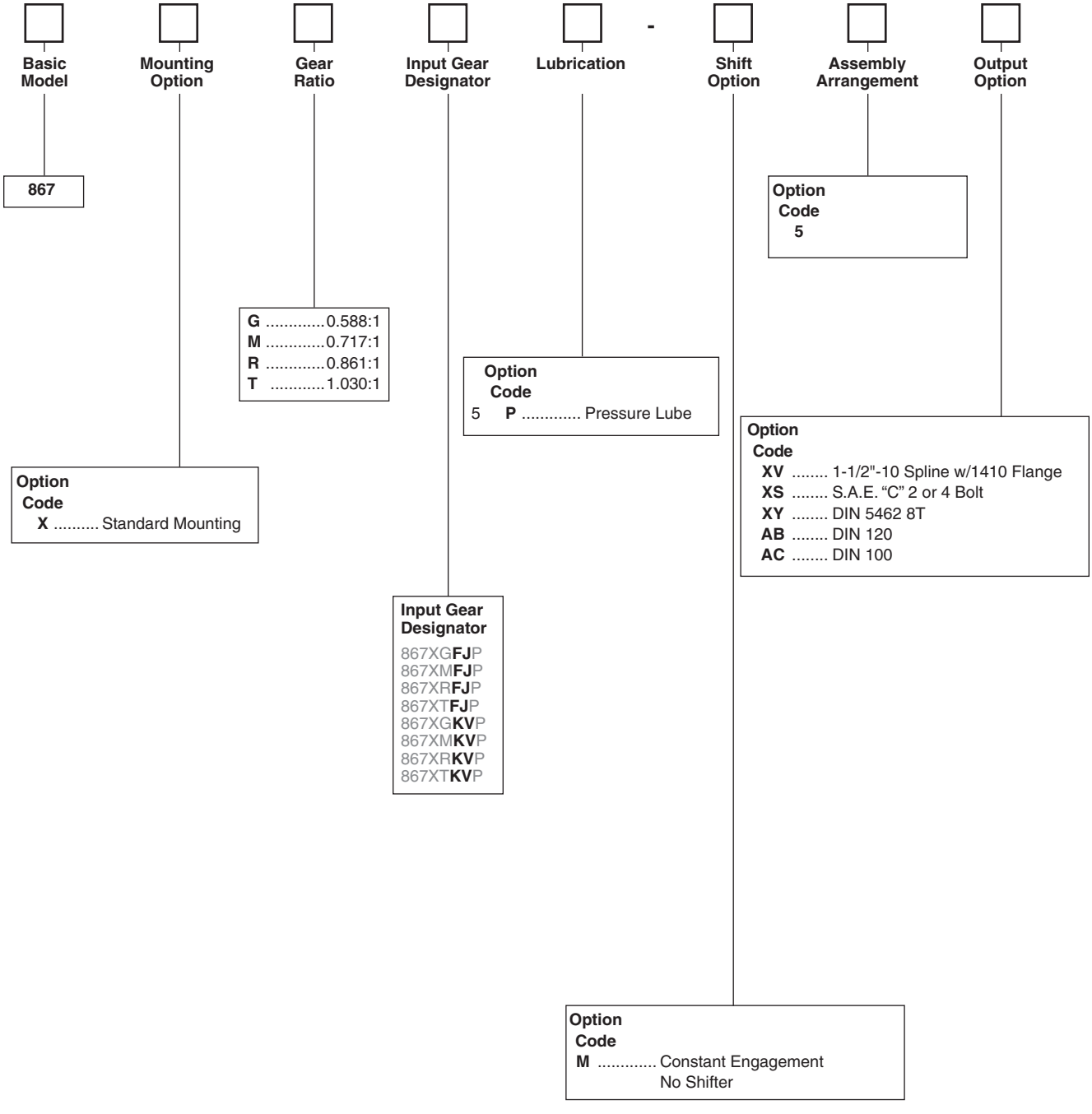

❺ Automatically Pressure Lubed

Parker Hannifin Corporation
Chelsea Products Division
Olive Branch, MS 38654 USA

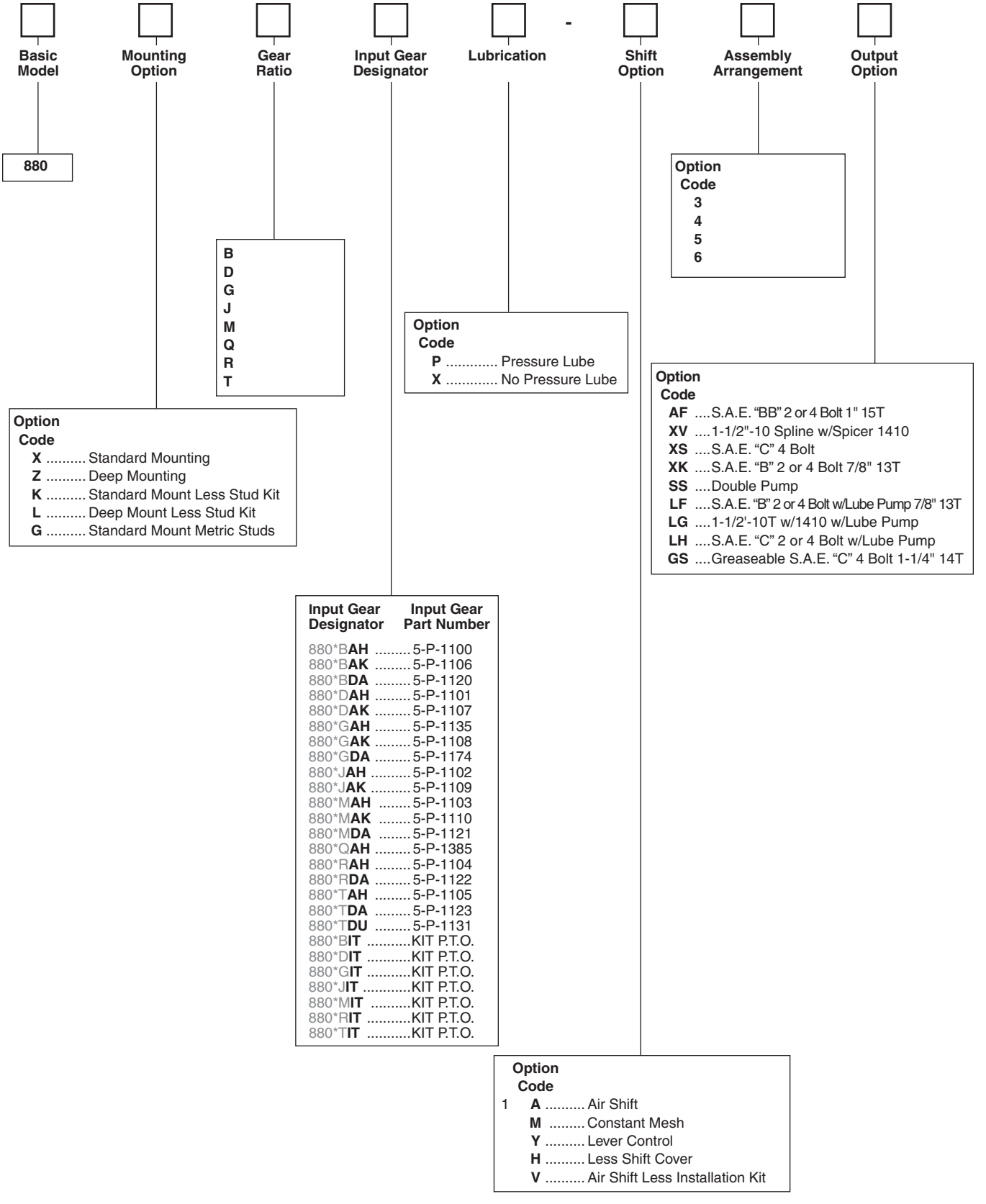

❶ Includes mounting parts

Parker Hannifin Corporation
Chelsea Products Division
Olive Branch, MS 38654 USA

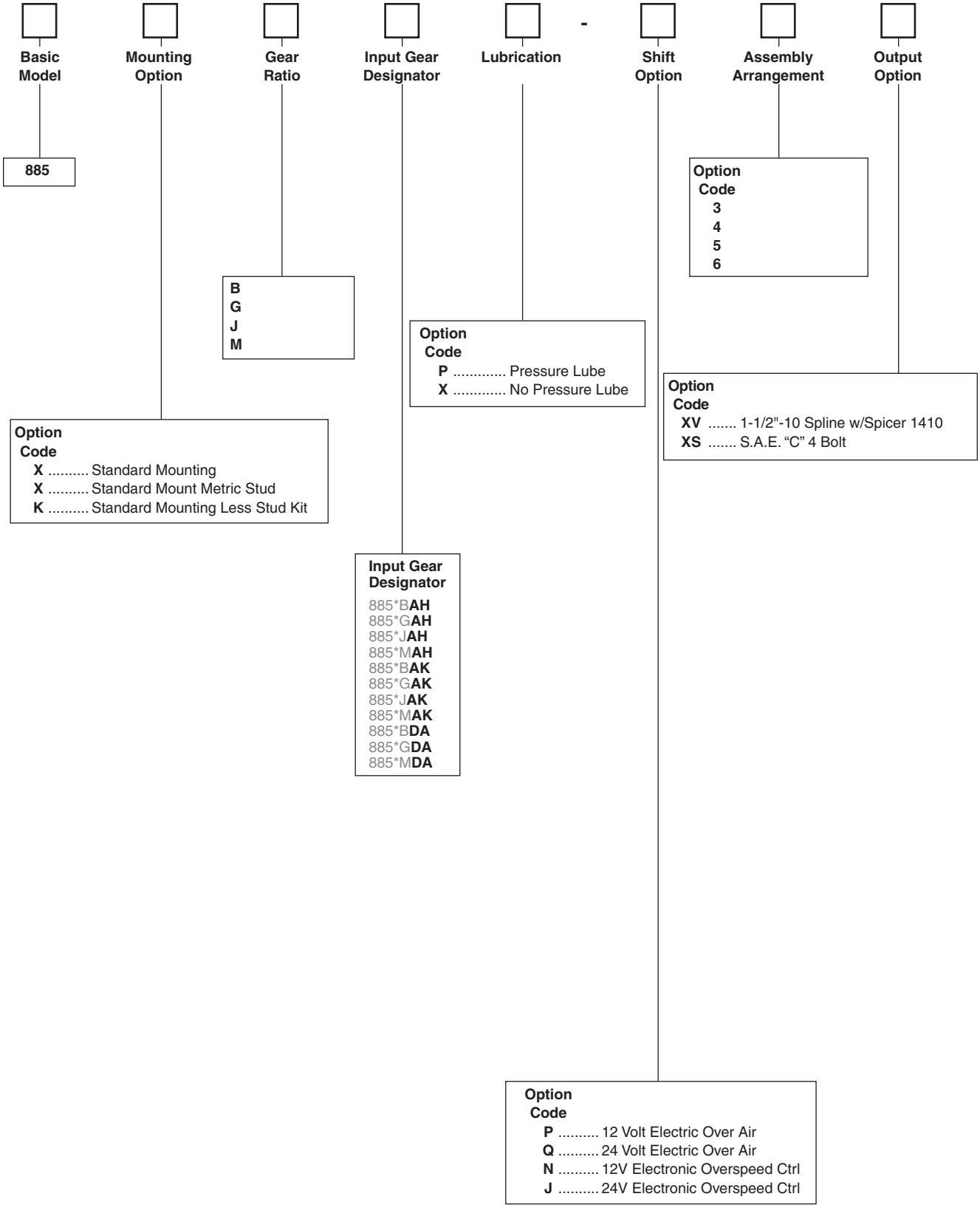

Parker Hannifin Corporation
Chelsea Products Division
Olive Branch, MS 38654 USA

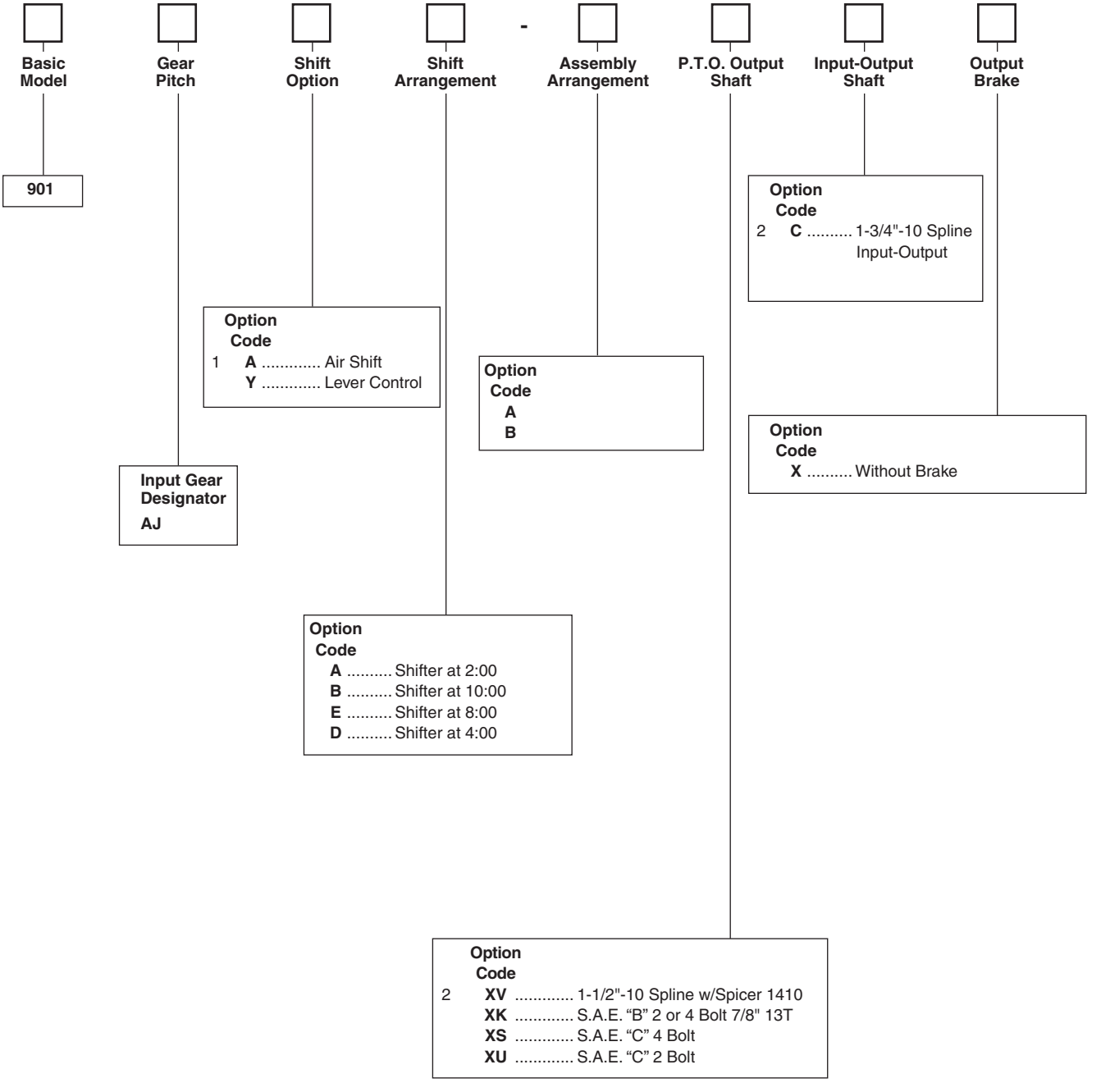

❶ Includes mounting parts
❷ Standard shaft

Parker Hannifin Corporation
Chelsea Products Division
Olive Branch, MS 38654 USA

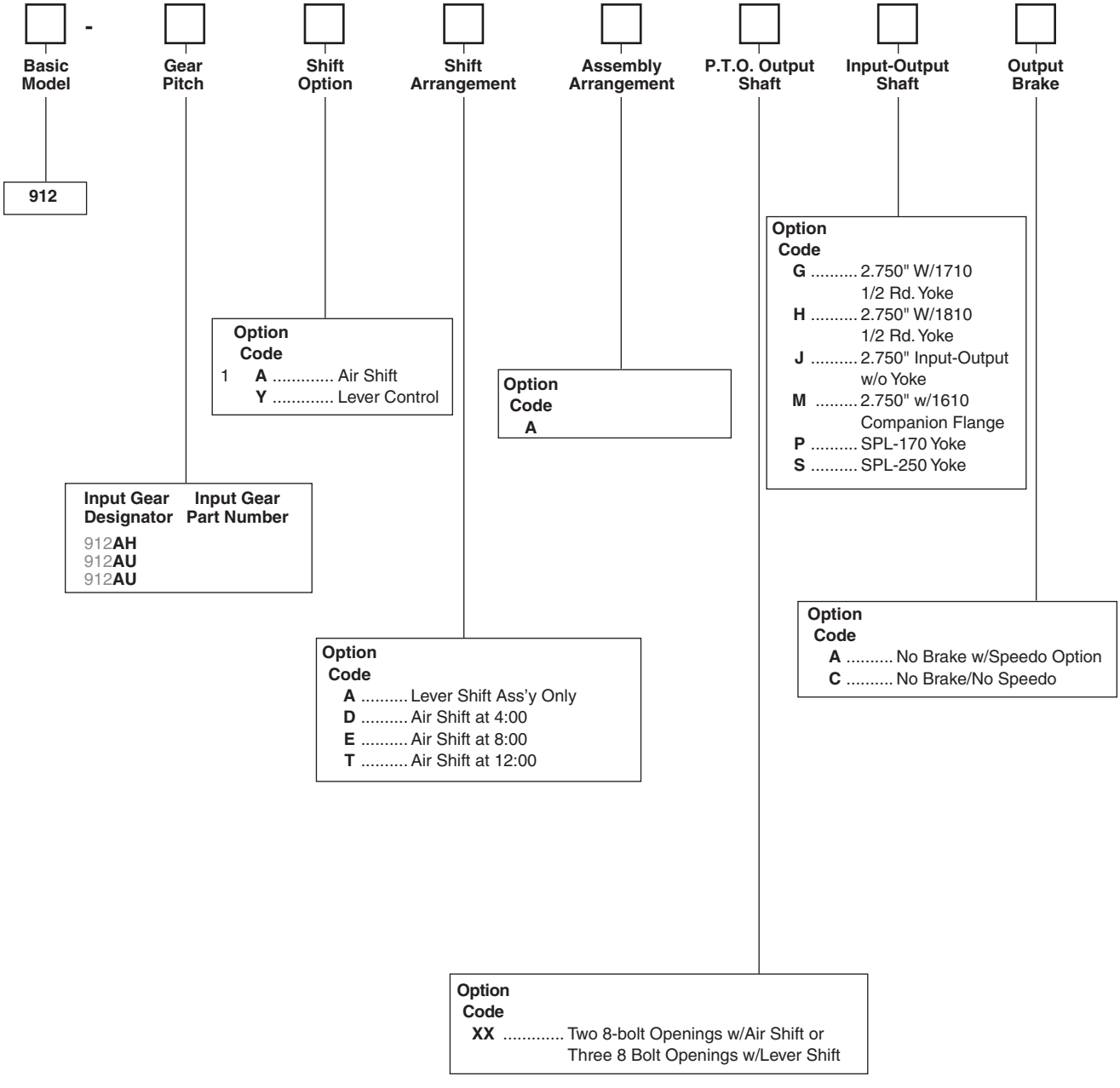

❶ Includes mounting parts

Parker Hannifin Corporation
Chelsea Products Division
Olive Branch, MS 38654 USA

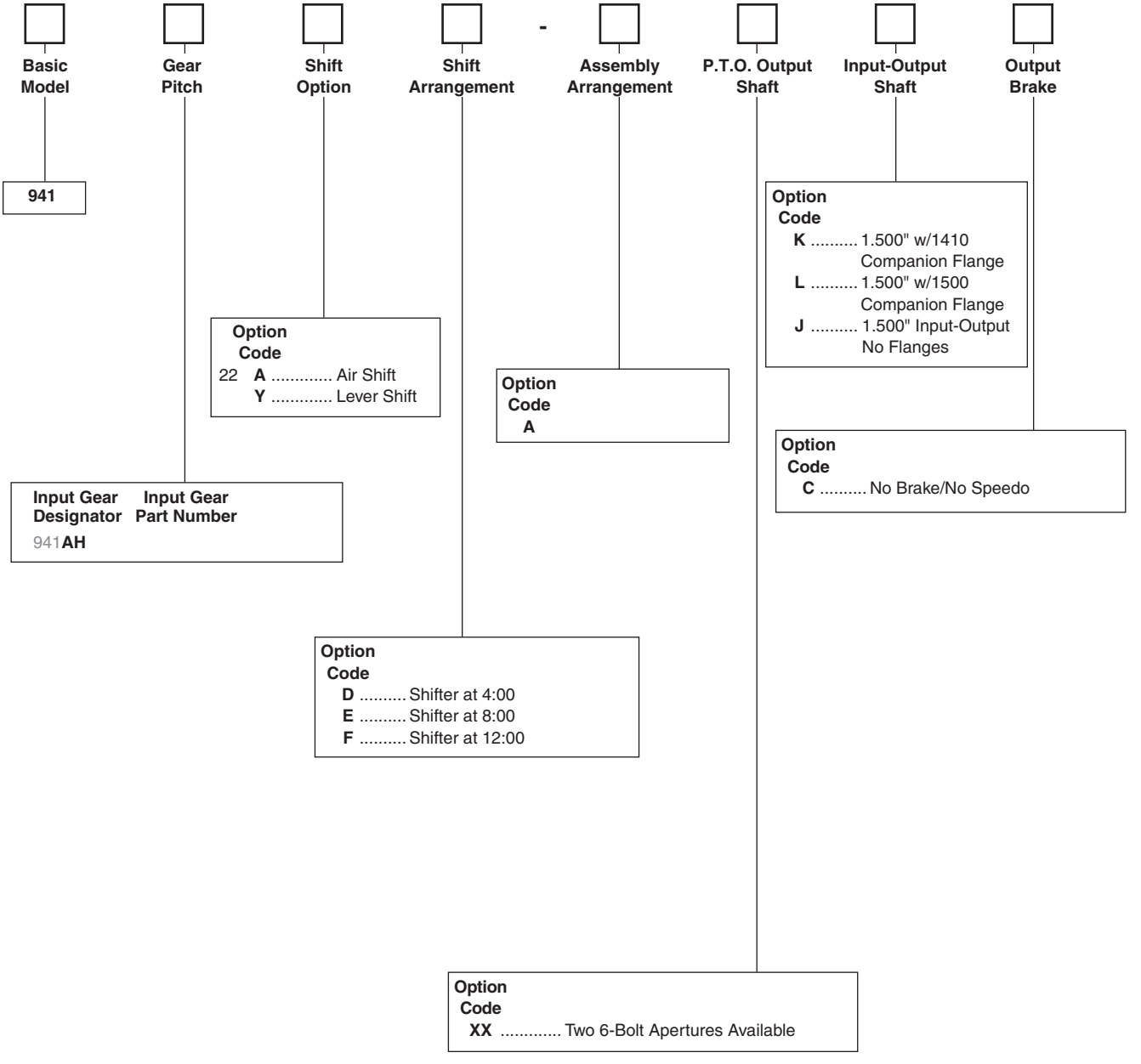

㉒ Includes air shift installation kit

Parker Hannifin Corporation
Chelsea Products Division
Olive Branch, MS 38654 USA

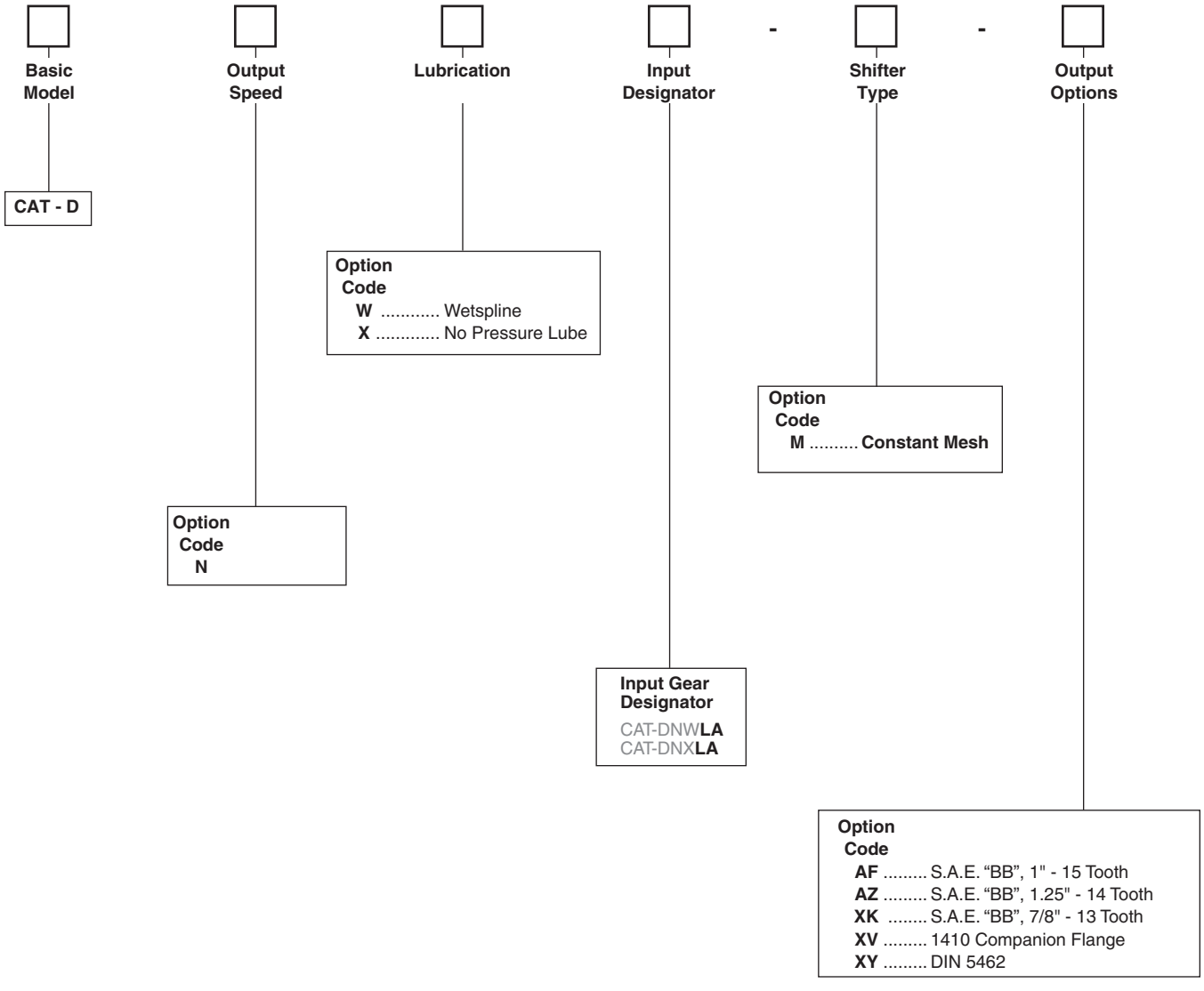

Parker Hannifin Corporation
Chelsea Products Division
Olive Branch, MS 38654 USA

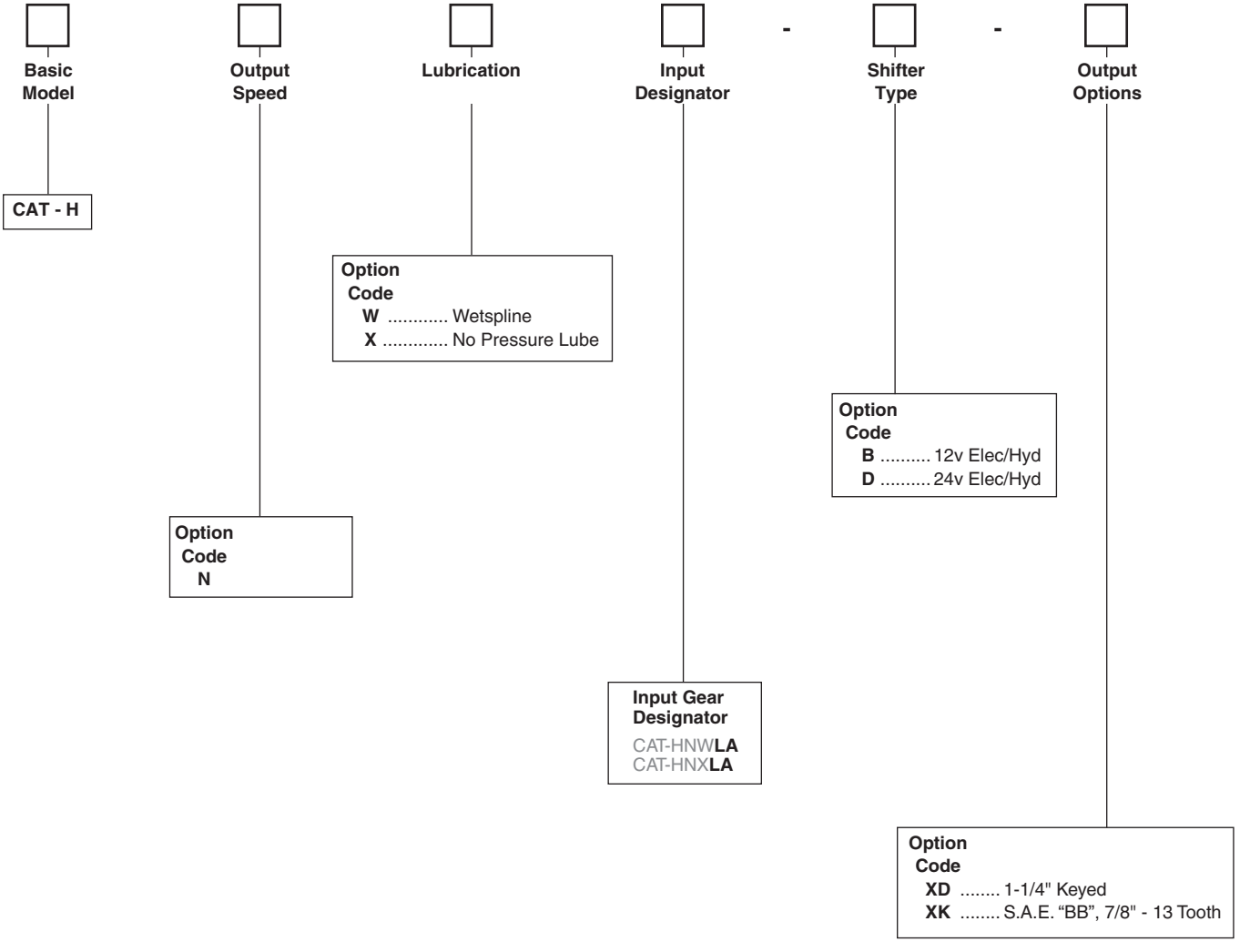

Parker Hannifin Corporation
Chelsea Products Division
Olive Branch, MS 38654 USA

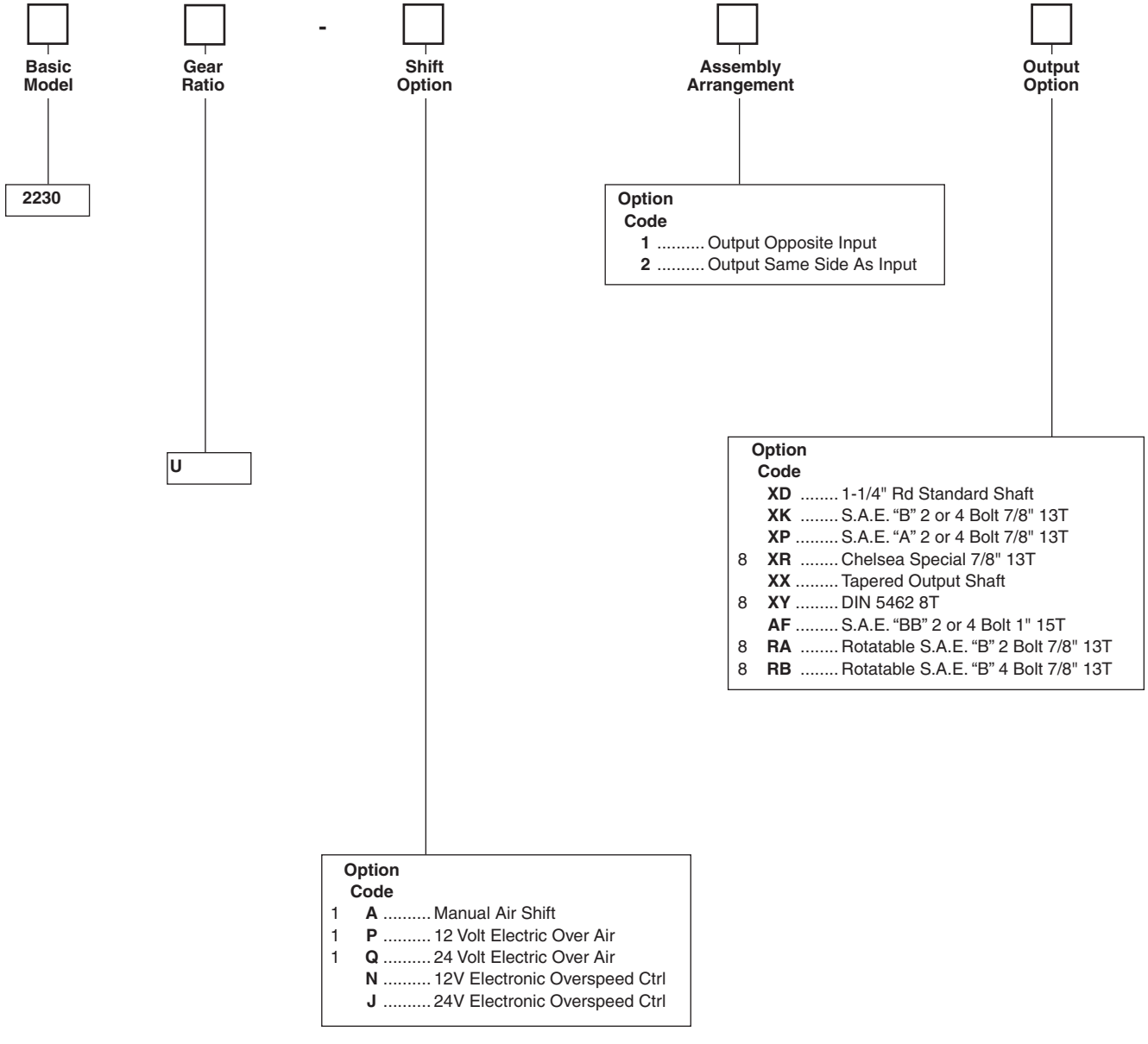

❶ Includes mounting parts
❽ Available assembly "1" only

Parker Hannifin Corporation
Chelsea Products Division
Olive Branch, MS 38654 USA

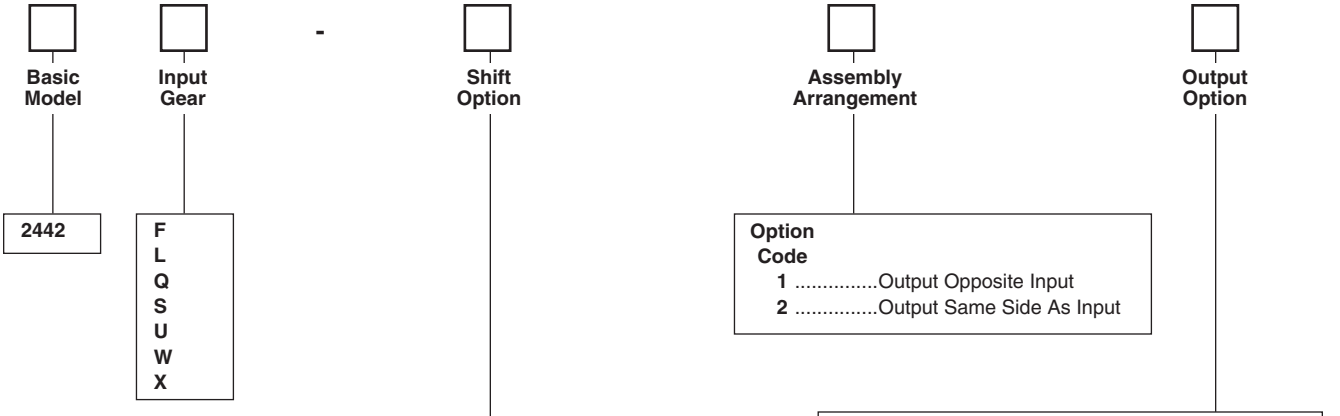

Option Code
- **1** .....Output Opposite Input
- **2** .....Output Same Side As Input

Option Code

	XD	1-1/4" Rd Standard Shaft
	XE	S.A.E. “A” 2 or 4 Bolt 5/8" 9T
	XG	S.A.E. “A” 2 Bolt 3/4" Rd
	XJ	S.A.E. “A” 2 Bolt 3/4" Rd
	XK	S.A.E. “B” 2 or 4 Bolt 7/8" 13T
	XQ	S.A.E. “B” 2 or 4 Bolt 7/8" 13T
	XR	Chelsea Special 7/8" 13T
	XX	Tapered Output Shaft
	XY	DIN 5462 8T
	AK	S.A.E. “B” 2 Bolt 7/8" 13T
	AF	S.A.E. “BB” 2 or 4 Bolt 1" 15T
	AZ	S.A.E. “B” 4 Bolt 1-1/4" 14T
	RA	Rotatable S.A.E. “B” 2 Bolt 7/8" 13T
	RB	Rotatable S.A.E. “B” 4 Bolt 7/8" 13T
	RC	Rotatable S.A.E. “A” 2 Bolt 5/8" 9T
	RD	Rotatable S.A.E. “A” 2 Bolt 7/8" 13T
	RE	Rotatable S.A.E. “BB” 4 Bolt 1" 15T
	RF	Rotatable S.A.E. “BB” 2 Bolt 1" 15T
	RY	Rotatable DIN 5462 8T
	GA	Greaseable Rot. “B” 2 Bolt 7/8" 13T
	GB	Greaseable Rot. “B” 4 Bolt 7/8" 13T
	GF	Greaseable S.A.E. “BB” 2 or 4 Bolt 1" 15T
	GH	Greaseable Rot. S.A.E. “BB” 2 Bolt 1" 15T
	GK	Greaseable S.A.E. “B” 2 or 4 Bolt 7/8" 13T
	GP	Greaseable S.A.E. “B” 2 or 4 Bolt 7/8" 13T
	GQ	Greaseable S.A.E. “B” 2 or 4 Bolt 7/8" 13T
	GR	Greaseable Chelsea Special 7/8" 13T
	GY	Greaseable DIN 5462 8T
	GZ	Greaseable S.A.E. “B” 4 Bolt 1-1/4" 14T

Option Code

1	**A**	Air Shift
	V	Air Shift Less Installation Kit
21	**S**	P.T.O. & Pump Combo Valve
21	**T**	Combo Valve Less Kick Out & Neutral Spring Return
1	**W**	Cable Shift
	C	Heavy Duty Bracket Less Cable (Minus)
	M	Constant Mesh
1	**P**	12 Volt Electric Over Air
	X	Less Cable And Knob (Minus)
	H	Less Wire Shift Cover (Minus)

❶ Includes mounting parts
❷❶ Includes installation kit, console sold separately

Parker Hannifin Corporation
Chelsea Products Division
Olive Branch, MS 38654 USA

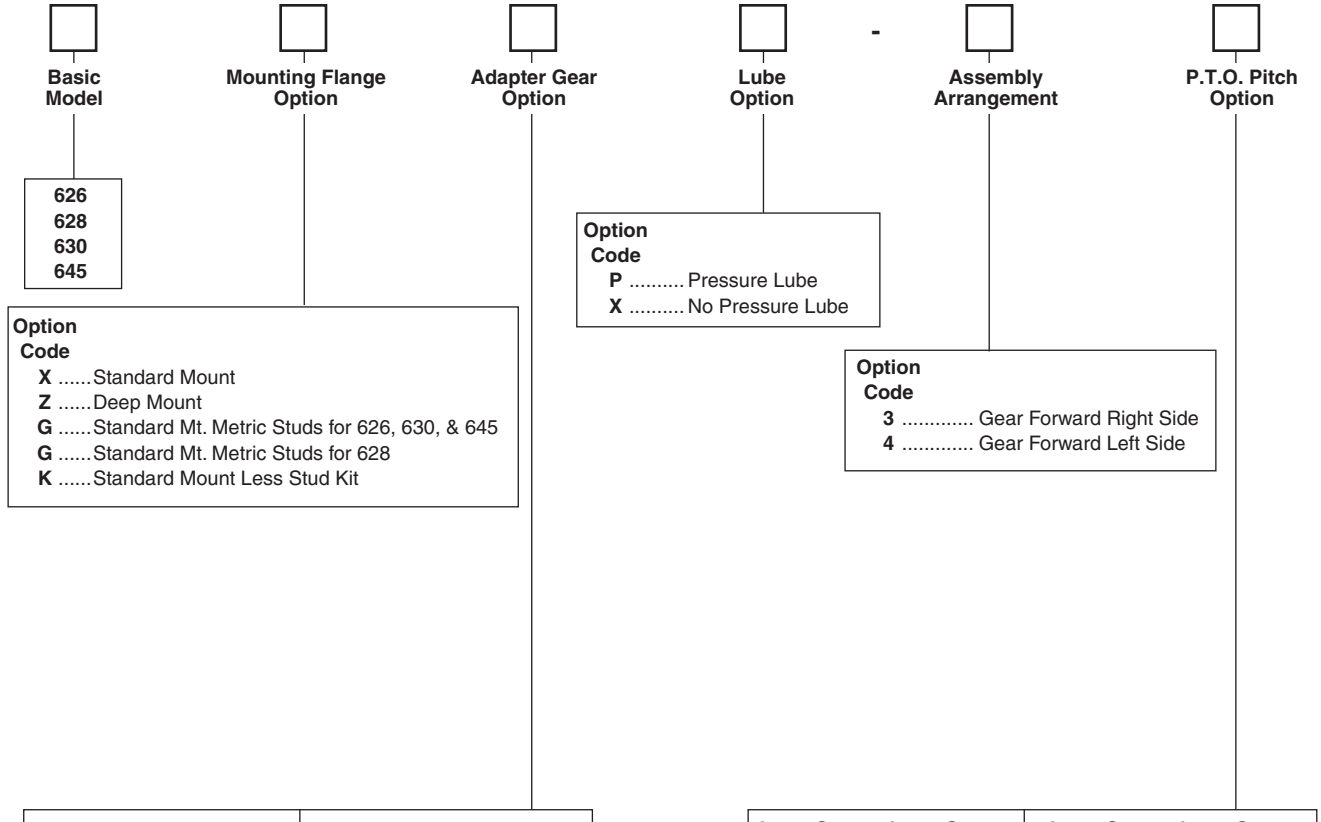

Input Gear Designator	Input Gear Part Number
626*AB	5-P-1001
626*AH	5-P-1004
626*AP	5-P-1006
626*AR	5-P-1008
626*BG	5-P-1015
626*BQ	5-P-1023
626*CD	5-P-1031
626*DA	5-P-1037
626*DU	5-P-1050
626*ED	5-P-1056
626*ES	5-P-1059
626*EV	5-P-1060
626*EW	5-P-1061
626*FN	5-P-1070
626*HY	5-P-1237
626*JK	5-P-1261
626*JM	5-P-1263
626*JU	5-P-1316
626*JW	5-P-1319
626*IT	KIT ADAPTER
628*AB	5-P-1001
628*AH	5-P-1004
628*AR	5-P-1008
628*BG	5-P-1015
628*DA	5-P-1037
628*DU	5-P-1050
628*EV	5-P-1060
628*IT	KIT ADAPTER
630*AB	5-P-1001
630*AH	5-P-1004
630*AP	5-P-1006
630*AR	5-P-1008
630*BG	5-P-1015
630*BQ	5-P-1023

Input Gear Designator	Input Gear Part Number
630*BS	5-P-1025
630*CD	5-P-1031
630*DA	5-P-1037
630*DU	5-P-1050
630*ED	5-P-1056
630*ES	5-P-1059
630*EV	5-P-1060
630*EW	5-P-1061
630*FN	5-P-1070
630*HY	5-P-1237
630*IT	KIT ADAPTER
630*JK	5-P-1261
630*JM	5-P-1263
630*JU	5-P-1316
630*JW	5-P-1319
645*AB	5-P-1001
645*AH	5-P-1004
645*AP	5-P-1006
645*AR	5-P-1008
645*BQ	5-P-1023
645*CD	5-P-1031
645*DA	5-P-1037
645*DU	5-P-1050
645*ED	5-P-1056
645*ES	5-P-1059
645*EV	5-P-1060
645*EW	5-P-1061
645*FN	5-P-1070
645*HY	5-P-1237
645*IT	KIT ADAPTER
645*JK	5-P-1261
645*JM	5-P-1263
645*JU	5-P-1316

Input Gear Designator	Input Gear Part Number
626*AB	5-P-1001
626*AH	5-P-1004
626*AP	5-P-1006
626*AR	5-P-1008
626*BG	5-P-1015
626*BQ	5-P-1023
626*CD	5-P-1031
626*DA	5-P-1037
626*DU	5-P-1050
626*ED	5-P-1056
626*ES	5-P-1059
626*EV	5-P-1060
626*EW	5-P-1061
626*FN	5-P-1070
626*HY	5-P-1237
626*JK	5-P-1261
626*JM	5-P-1263
626*JU	5-P-1316
626*JW	5-P-1319
626*IT	KIT ADAPTER
628*AB	5-P-1001
628*AH	5-P-1004
628*AR	5-P-1008
628*BG	5-P-1015
628*DA	5-P-1037
628*DU	5-P-1050
628*EV	5-P-1060
628*IT	KIT ADAPTER
630*AB	5-P-1001
630*AH	5-P-1004
630*AP	5-P-1006
630*AR	5-P-1008
630*BG	5-P-1015
630*BQ	5-P-1023

Input Gear Designator	Input Gear Part Number
630*BS	5-P-1025
630*CD	5-P-1031
630*DA	5-P-1037
630*DU	5-P-1050
630*ED	5-P-1056
630*ES	5-P-1059
630*EV	5-P-1060
630*EW	5-P-1061
630*FN	5-P-1070
630*HY	5-P-1237
630*IT	KIT ADAPTER
630*JK	5-P-1261
630*JM	5-P-1263
630*JU	5-P-1316
630*JW	5-P-1319
645*AB	5-P-1001
645*AH	5-P-1004
645*AP	5-P-1006
645*AR	5-P-1008
645*BQ	5-P-1023
645*CD	5-P-1031
645*DA	5-P-1037
645*DU	5-P-1050
645*ED	5-P-1056
645*ES	5-P-1059
645*EV	5-P-1060
645*EW	5-P-1061
645*FN	5-P-1070
645*HY	5-P-1237
645*IT	KIT ADAPTER
645*JK	5-P-1261
645*JM	5-P-1263
645*JU	5-P-1316

Notes

Parker Hannifin Corporation
Chelsea Products Division
Olive Branch, MS 38654 USA

Applications

Aisin ..... 4.1.1 thru 4.1.4
Allison ..... 4.2.1 thru 4.2.22
Caterpillar ..... 4.3.1 thru 4.3.16
Chelsea ..... 4.4.1 thru 4.4.8
Dodge ..... 4.5.1 thru 4.5.4
Eaton Fuller ..... 4.6.1 thru 4.6.70
Ford ..... 4.7.1 thru 4.7.2
GM ..... 4.8.1 thru 4.8.6
Hino ..... 4.9.1 thru 4.9.8
Isuzu ..... 4.10.1 thru 4.10.14
Mack ..... 4.11.1 thru 4.11.52
Mercedes ..... 4.12.1 thru 4.12.6
Meritor (includes Rockwell) ..... 4.13.1 thru 4.13.24
Mitsubishi ..... 4.14.1 thru 4.14.14
New Process ..... 4.15.1 thru 4.15.6
New Venture ..... 4.16.1 thru 4.16.6
Nissan ..... 4.17.1 thru 4.17.6
Renault ..... 4.18.1 thru 4.18.4
Tremec ..... 4.19.1 thru 4.19.4
TTC (Includes Spicer) ..... 4.20.1 thru 4.20.124
Warner ..... 4.21.1 thru 4.21.4
ZF ..... 4.22.1 thru 4.22.15

AISIN

⚠ WARNING

FAILURE OR IMPROPER SELECTION OR IMPROPER USE OF THE PRODUCTS AND/OR SYSTEMS DESCRIBED HEREIN OR RELATED ITEMS CAN CAUSE DEATH, PERSONAL INJURY AND PROPERTY DAMAGE.

This document and other information from Parker Hannifin Corporation, its subsidiaries and authorized distributors provide product and/or system options for further investigation by users having technical expertise. It is important that you analyze all aspects of your application and review the information concerning the product or system in the current product catalog. Due to the variety of operating conditions and applications for these products or systems, the user, through its own analysis and testing, is solely responsible for making the final selection of the products and systems and assuring that all performance, safety and warning requirements of the application are met.

The products described herein, including without limitation, product features, specifications, designs, availability and pricing, are subject to change by Parker Hannifin Corporation and its subsidiaries at any time without notice.

Offer of Sale

The items described in this document are hereby offered for sale by Parker Hannifin Corporation, its subsidiaries or its authorized distributors. This offer and its acceptance are governed by the provisions stated in the "Offer of Sale".

© Copyright 2008, Parker Hannifin Corporation, All Rights Reserved

Parker Hannifin Corporation
Chelsea Products Division
Olive Branch, MS 38654 USA

Transmission Make and Model	P.T.O. Appl. Number	Number Forward Speeds	Teeth in P.T.O. Driver
A443E	AIS-1	4	L58
A445	AIS-1	4	L58
A450-43LE	IZU-12	4	L58
MY600	AIS-2	6	L69

IMPORTANT: See Safety Information in Section I of the Chelsea Applications catalog HY25-3000/US.

Transmission P.T.O. Driver & Aperatures (Viewed from Rear of Transmission)

L-Left Side R-Right Side B-Bottom Side T-Top Side

For transmission not listed, contact your authorized Chelsea Distributor.

January 2008

Parker Hannifin Corporation
Chelsea Products Division
Olive Branch, MS 38654 USA

A443E
A445
MO35A4

LEFT SIDE ONLY

TRANSMISSION GEAR DATA:
L.H. 6-Bolt Opening Gear FORWARD of Centerline
58 Teeth - SPUR

PITCH LINE TO APERTURE FACE:
1.0880" (27.6352MM)

Caution: Application Approval Required for P.T.O. Output Shaft Speeds Above 2500 R.P.M.

LEFT Side P.T.O. Model	Inter. Torq.	Dir. Rot.	Engine % Hi	Engine % Rev	Filler Block	Adapter Assy.	Stud Kit	P.T.O. Model	Inter. Torq.	Dir. Rot.	Engine % Hi	Engine % Rev	Filler Block	Adapter Assy.	Stud Kit
ONE SPEED - TWO GEAR - POWERSHIFT (HYDRAULIC)															
243AGKUP-*5 (1)	85	Opp	140				Furnished								
270AAKUP-*5 (2)	210	Eng	55				Furnished								
270ABKUP-*5 (3)	163	Eng	71				Furnished								
270ADKUP-*5 (4)	139	Eng	82				Furnished								
270AKKUP-*5 (5)	104	Eng	111				Furnished								
270AQKUP-*5 (6)	78	Eng	130				Furnished								

Continued Next Page

NOTE: When ordering the 270 "A", the hose kit 329246X and metric stud kit 328170-205X is furnished with the P.T.O. The hose kit and metric stud kit are required for completing the 270 Series installation. The 329246X kit supplies hoses for the low pressure lube, high pressure oil, and drain back oil.

NOTE: The torque ratings shown for the 270 Series are based on the maximum allowable torque capacity of the P.T.O. drive gear in the transmission.

NOTE: To mount the 243 Series or 270 Series a revision to the 6 bolt aperture face had to be made so the input gear of the PTO did not interfere with the transmission case. The revised transmission case will have a serial number of 8D3394 or higher.

(1) Input Gear Part No. 5-P-1352
(2) Input Gear Part No. 5-P-1353
(3) Input Gear Part No. 5-P-1354
(4) Input Gear Part No. 5-P-1355
(5) Input Gear Part No. 5-P-1356
(6) Input Gear Part No. 5-P-1359

Parker Hannifin Corporation
Chelsea Products Division
Olive Branch, MS 38654 USA

MY600

MO36A6

LEFT SIDE ONLY

TRANSMISSION GEAR DATA:

L.H. 6-Bolt Opening Gear FORWARD of Centerline

69 Teeth - SPUR

PITCH LINE TO APERTURE FACE:

1.0880" (27.6352MM)

Caution: Application Approval Required for P.T.O. Output Shaft Speeds Above 2500 R.P.M.

ONE SPEED - TWO GEAR - POWERSHIFT (HYDRAULIC)

LEFT Side P.T.O. Model	Inter. Torq.	Dir. Rot.	Engine % Hi	Engine % Rev	Filler Block	Adapter Assy.	Stud Kit
243AGKUP-*5 (1)	65	Opp	167		7-A-032		Furnished
270AAKUP-*5 (2)	167	Eng	65		7-A-032		Furnished
270ABKUP-*5 (3)	129	Eng	85		7-A-032		Furnished
270ADKUP-*5 (4)	112	Eng	98		7-A-032		Furnished
270AKKUP-*5 (5)	82	Eng	132		7-A-032		Furnished
270AQKUP-*5 (6)	78	Eng	155		7-A-032		Furnished

P.T.O. Model	Inter. Torq.	Dir. Rot.	Engine % Hi	Engine % Rev	Filler Block	Adapter Assy.	Stud Kit

NOTE: When ordering the 270 "A", the Hose Kit 329246X and Metric Stud Kit 328170-205X are furnished with the P.T.O. The Hose and Metric Stud Kit are required for completing the 270 Series installation. The 329246X kit supplies the hoses for the low pressure lube, high pressure oil, and drain back oil.

(1) Input Gear Part No. 5-P-1352
(2) Input Gear Part No. 5-P-1353
(3) Input Gear Part No. 5-P-1354
(4) Input Gear Part No. 5-P-1355
(5) Input Gear Part No. 5-P-1356
(6) Input Gear Part No. 5-P-1359

Parker Hannifin Corporation
Chelsea Products Division
Olive Branch, MS 38654 USA

A450-43LE

450-43LE

LEFT SIDE ONLY

TRANSMISSION GEAR DATA:

L.H. 6-Bolt Opening Gear FORWARD of Centerline

58 Teeth - SPUR

PITCH LINE TO APERTURE FACE:

1.0880" (27.6352MM)

Caution: Application Approval Required for P.T.O. Output Shaft Speeds Above 2500 R.P.M.

LEFT Side P.T.O. Model	Inter. Torq.	Dir. Rot.	Engine %		Filler Block	Adapter Assy.	Stud Kit	P.T.O. Model	Inter. Torq.	Dir. Rot.	Engine %		Filler Block	Adapter Assy.	Stud Kit
			Hi	Rev							Hi	Rev			
ONE SPEED - TWO GEAR - POWERSHIFT (HYDRAULIC)															
270AAKUP-*5 (1)	210	Eng	55				Furnished								
270ABKUP-*5 (2)	163	Eng	71				Furnished								
270ADKUP-*5 (3)	139	Eng	82				Furnished								
270AKKUP-*5 (4)	104	Eng	111				Furnished								
270AQKUP-*5 (5)	78	Eng	148				Furnished								

NOTE: When ordering the 270 "A", the hose kit 329246X and metric stud kit 328170-205X is furnished with the P.T.O. The hose kit and metric stud kit are required for completing the 270 Series installation. The 329246X kit supplies hoses for the low pressure lube, high pressure oil, and drain back oil.

NOTE: The torque ratings shown for the 270 Series are based on the maximum allowable torque capacity of the P.T.O. drive gear in the transmission.

NOTE: The P.T.O.s shown on this application page will fit Isuzu NQR model trucks with serial number X7901741 and later only.

NOTE: The P.T.O.s shown on this application page will fit Isuzu NPR model trucks with wheel bases of 109" or 132" and a serial number of X7006763 and later.

NOTE: The P.T.O.s shown on this application page will also fit the same NPR model trucks with wheel bases of 150" and 176" after August of 1998 and serial number of X7006763 and later.

NOTE: The serial number is the last eight digits found on the VIN plate which is located in the cab behind the driver.

(1) Input Gear Part No. 5-P-1353
(2) Input Gear Part No. 5-P-1354
(3) Input Gear Part No. 5-P-1355
(4) Input Gear Part No. 5-P-1356
(5) Input Gear Part No. 5-P-1359

Parker Hannifin Corporation
Chelsea Products Division
Olive Branch, MS 38654 USA

ALLISON

⚠ WARNING

FAILURE OR IMPROPER SELECTION OR IMPROPER USE OF THE PRODUCTS AND/OR SYSTEMS DESCRIBED HEREIN OR RELATED ITEMS CAN CAUSE DEATH, PERSONAL INJURY AND PROPERTY DAMAGE.

This document and other information from Parker Hannifin Corporation, its subsidiaries and authorized distributors provide product and/or system options for further investigation by users having technical expertise. It is important that you analyze all aspects of your application and review the information concerning the product or system in the current product catalog. Due to the variety of operating conditions and applications for these products or systems, the user, through its own analysis and testing, is solely responsible for making the final selection of the products and systems and assuring that all performance, safety and warning requirements of the application are met.

The products described herein, including without limitation, product features, specifications, designs, availability and pricing, are subject to change by Parker Hannifin Corporation and its subsidiaries at any time without notice.

Offer of Sale

The items described in this document are hereby offered for sale by Parker Hannifin Corporation, its subsidiaries or its authorized distributors. This offer and its acceptance are governed by the provisions stated in the "Offer of Sale".

© Copyright 2008, Parker Hannifin Corporation, All Rights Reserved

Parker Hannifin Corporation
Chelsea Products Division
Olive Branch, MS 38654 USA

Allison Transmission has redesigned the transmission nameplates for all 1000/2000 and 3000/4000 Product Family transmissions. The new nameplate design contains only the information essential to the identification of the transmission. The transmission model number will no longer appear on the nameplate, it has been replaced by the serial number. This change was implemented July 2005.

The transmission product family is identified by the first two digits of the transmission serial number:

Serial Number	Product Family
63xxxxxxxx	1000 and 2000 Product Family
65xxxxxxxx	3000 Product Family
66xxxxxxxx	4000 Product Family

"SP" models will contain additional information to accommodate military applications. The transmission E-number is embossed on the "SP" models and when required for other models sold to the military. The transmission model number is embossed on the nameplate for "SP" model and "MD" and "HD" models sold to the military. The model number will not be embossed for any other model. (Ref: Allison Watch #335 Rev. A)

For further assistance contact Allison Technical Assistance at (800) 252-5283.

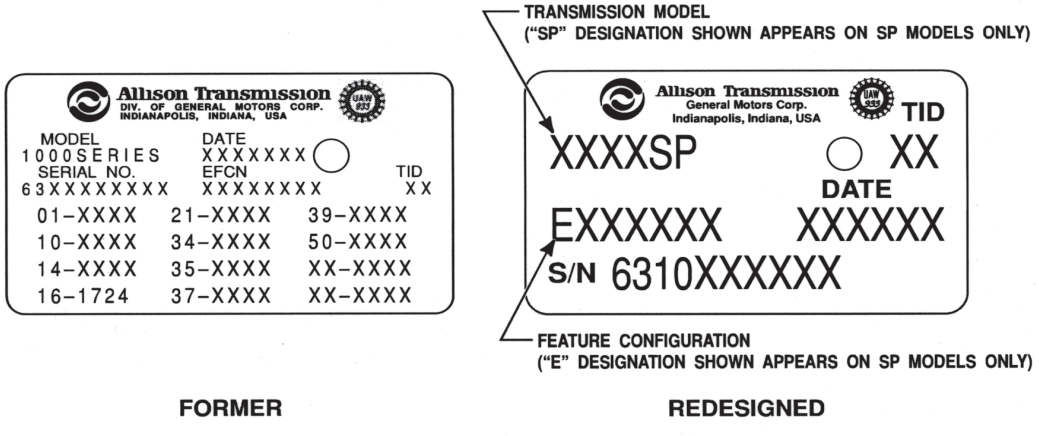

Figure 1. 1000 and 2000 Product Families Nameplates

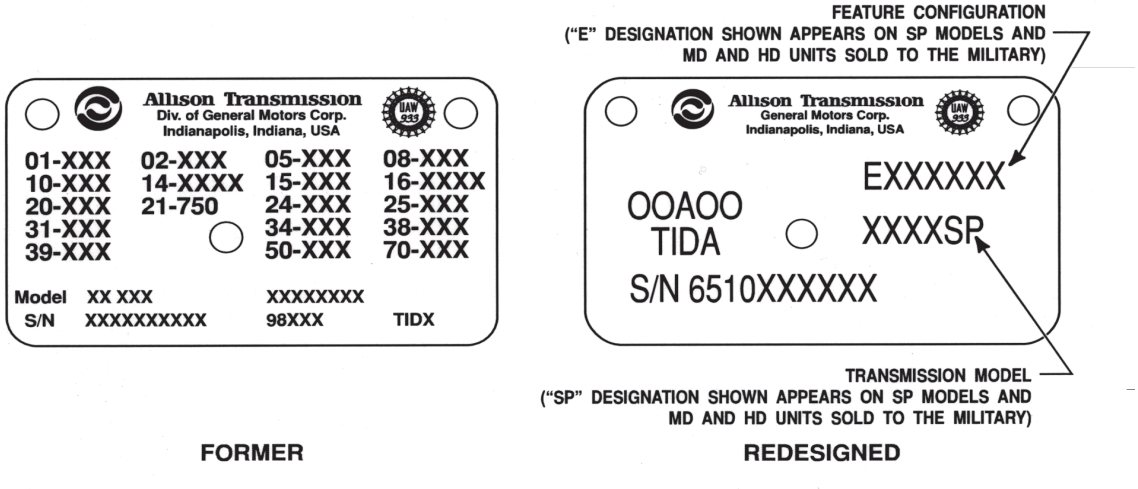

Figure 2. 3000 and 4000 Product Families Nameplates

Parker Chelsea
Parker Hannifin Corporation
Chelsea Products Division
Olive Branch, MS 38654 USA

Notes

Parker Hannifin Corporation
Chelsea Products Division
Olive Branch, MS 38654 USA

Transmission Make and Model	P.T.O. Appl. Number	Number Forward Speeds	Teeth in P.T.O. Driver
AT-540	ALL-4	4	R55
AT-542	ALL-4	4	R55
AT-543	ALL-4	4	R55
AT-545	ALL-4	4	R55
B 210	ALL-15	5	L64-R64
B 220	ALL-15	5	L64-R64
B 300	ALL-13	6	L68-R68
B 400	ALL-13	6	L68-R68
B 500	ALL-14	6	L97-R97
CLBT-750	ALL-6	5	L78
CLBT-750 (With Optional 8-bolt Opening Ahead of Torque Converter)	ALL-12	5	L64-T40
CLBT-754	ALL-6	5	L78
CLBT-754 (With Optional 8-bolt Opening Ahead of Torque Converter)	ALL-12	5	L64-T40
CLT-750	ALL-6	5	L78
CLT-750 (With Optional 8-bolt Opening Ahead of Torque Converter)	ALL-12	5	L64-T40
CLT-754	ALL-6	5	L78
CLT-754 (With Optional 8-bolt Opening Ahead of Torque Converter)	ALL-12	5	L64-T40
CLT-9485	ALL-11	6	R52
CLT-9880	ALL-11	6	R52
CLT-9884	ALL-11	6	R52
CLT-9885	ALL-11	6	R52
HD-4060P (Close Ratio)	ALL-14	6	L97-R97
HD-4070P	ALL-14	7	L97-R97
HD-4560P (Wide Ratio)	ALL-14	6	L97-R97
HT-740CRD	ALL-6	4	L78
HT-740D	ALL-6	4	L78
HT-740DRD	ALL-6	4	L78
HT-740T	ALL-6	4	L78
HT-750CRD	ALL-6	5	L78
HT-750CRD (W/Optional 8-Bolt Opening Ahead of Torque Converter)	ALL-12	5	L64-T40
HT-750D	ALL-6	5	L78
HT-750DP	ALL-6	5	L78
HT-750DRD	ALL-6	5	L78
HT-750DT	ALL-6	5	L78
HT-750HT	ALL-6	5	L78
HT-750T	ALL-6	5	L78

IMPORTANT: See Safety Information in Section I of the Chelsea Applications catalog HY25-3000/US.

Transmission P.T.O. Driver & Aperatures (Viewed from Rear of Transmission)

L-Left Side R-Right Side B-Bottom Side T-Top Side

For transmission not listed, contact your authorized Chelsea Distributor.

January 2008

Parker Hannifin Corporation
Chelsea Products Division
Olive Branch, MS 38654 USA

ALLISON TRANSMISSION INDEX

Transmission Make and Model	P.T.O. Appl. Number	Number Forward Speeds	Teeth in P.T.O. Driver
HT-754CR	ALL-6	5	L78
M5600 (“M” = “Mobil Mode”)	ALL-8	6	R46
M6600 (“M” = “Mobil Mode”)	ALL-8	6	R46
M9600 (“M” = “Mobil Mode”)	ALL-11	6	R52
M9800 (“M” = “Mobil Mode”)	ALL-11	8	R52
MD-3060P (Close Ratio)	ALL-13	6	L68-R68
MD-3066P (Europe Only)	ALL-16	6	L83-R83
MD-3070P (Close Ratio)	ALL-13	7	L68-R68
MD-3560P (Wide Ratio)	ALL-13	6	L68-R68
MT-640	ALL-5	4	R64
MT-643	ALL-5	4	R64
MT-644	ALL-5	4	R64
MT-650	ALL-5	5	R64
MT-653	ALL-5	5	R64
MT-654	ALL-5	5	R64
S5600 (“S” = “Stationary Mode”)	ALL-8	6	R46
S6600 (“S” = “Stationary Mode”)	ALL-8	6	R46
S9600 (“S” = “Stationary Mode”)	ALL-11	6	R52
S9800 (“S” = “Stationary Mode”)	ALL-11	8	R52
1000	ALL-15	5	L64-R64
1000 (GM 3600 Cab-Chassis)	ALL-17	5	R64
1000 EVS	ALL-15	5	L64-R64
1000 MH	ALL-15	5	L64-R64
1000 RDS	ALL-15	5	L64-R64
2000	ALL-15	5	L64-R64
2100 EVS	ALL-15	5	L64-R64
2100 MH	ALL-15	5	L64-R64
2100 RDS	ALL-15	5	L64-R64
2200 EVS	ALL-15	5	L64-R64
2200 MH	ALL-15	5	L64-R64
2200 RDS	ALL-15	5	L64-R64
2300 RDS	ALL-15	6	L64-R64
2400	ALL-15	5	L64-R64
2500 EVS	ALL-15	5	L64-R64
2500 MH	ALL-15	5	L64-R64
2500 RDS	ALL-15	5	L64-R64

IMPORTANT: See Safety Information in Section 1 of the Chelsea Applications catalog HY25-3000/US.

Transmission P.T.O. Driver & Aperatures (Viewed from Rear of Transmission)

L-Left Side R-Right Side B-Bottom Side T-Top Side

For transmission not listed, contact your authorized Chelsea Distributor.

January 2008

Parker Hannifin Corporation
Chelsea Products Division
Olive Branch, MS 38654 USA

Transmission Make and Model	P.T.O. Appl. Number	Number Forward Speeds	Teeth in P.T.O. Driver
3000 EVS (Emergency Vehicles Only Top / Side PTO Provisions)	ALL-16EV	6	L83-T83
3000 MH	ALL-13	6	L68-R68
3000 RDS	ALL-13	6	L68-R68
3000 TRV	ALL-13	6	L68-R68
3200 TRV	ALL-13	6	L68-R68
3500 EVS (Emergency Vehicles Only Top / Side PTO Provisions)	ALL-16EV	6	L83-T83
3500 RDS	ALL-13	6	L68-R68
4000 EVS	ALL-14	6	L97-R97
4000 MH	ALL-14	6	L97-R97
4000 RDS	ALL-14	6	L97-R97
4000 TRV	ALL-14	6	L97-R97
4500 EVS	ALL-14	6	L97-R97
4500 RDS	ALL-14	6	L97-R97
4700 EVS	ALL-14	7	L97-R97
4700 OFS	ALL-14	7	L97-R97
4700 RDS	ALL-14	6	L97-R97
4800 EVS	ALL-14	7	L97-R97

IMPORTANT: See Safety Information in Section I of the Chelsea Applications catalog HY25-3000/US.

Transmission P.T.O. Driver & Aperatures (Viewed from Rear of Transmission)

L-Left Side R-Right Side B-Bottom Side T-Top Side

For transmission not listed, contact your authorized Chelsea Distributor.

January 2008

Parker Hannifin Corporation
Chelsea Products Division
Olive Branch, MS 38654 USA

AT-540
AT-542
AT-543
AT-545

RIGHT SIDE ONLY

TRANSMISSION GEAR DATA:
R.H. 6-Bolt Opening Gear FORWARD of Centerline
55 Teeth - SPUR

PITCH LINE TO APERTURE FACE:
1.0850" (27.5600MM)

Caution: Application Approval Required for P.T.O. Output Shaft Speeds Above 2500 R.P.M.

P.T.O. Model	Inter. Torq.	Dir. Rot.	Engine % Hi	Engine % Rev	Filler Block	Adapter Assy.	Stud Kit	RIGHT Side P.T.O. Model	Inter. Torq.	Dir. Rot.	Engine % Hi	Engine % Rev	Filler Block	Adapter Assy.	Stud Kit
ONE SPEED - TWO GEAR - MECHANICAL SHIFT															
								221XCAJP-*3 (1)	235	Eng	106				Furnished
								221XEAJP-*3 (1)	212	Eng	118				Furnished
								442XBAHP-*3 (2)	250	Eng	90				Furnished
ONE SPEED - TWO GEAR - POWERSHIFT (HYDRAULIC)															
								270XAAJP-*3 (3)	300	Eng	75				Furnished
								270XBAJP-*3 (4)	250	Eng	97				Furnished
								270XDAJP-*3 (5)	222	Eng	112				Furnished
								270XKAJP-*3 (6)	165	Eng	152				Furnished
								271MAAJP-*5 (3)	250	Eng	75				Furnished
								271MBAJP-*5 (4)	250	Eng	97				Furnished
								271MDAJP-*5 (5)	222	Eng	112				Furnished
								271MKAJP-*5 (6)	165	Eng	152				Furnished
ONE SPEED - TWO GEAR - POWERSHIFT (AIR)															
								230XAAJP-*3 (3)	300	Eng	75				Furnished
								230XBAJP-*3 (4)	250	Eng	97				Furnished
								230XDAJP-*3 (5)	222	Eng	112				Furnished
								230XKAJP-*3 (6)	165	Eng	152				Furnished
								230XQAJP-*3 (7)	125	Eng	202				Furnished
								231MAAJP-*5 (3)	250	Eng	75				Furnished
								231MBAJP-*5 (4)	250	Eng	97				Furnished
								231MDAJP-*5 (5)	222	Eng	112				Furnished
								231MKAJP-*5 (6)	165	Eng	152				Furnished
								231MQAJP-*5 (7)	125	Eng	202				Furnished

CAUTION: P.T.O. output shaft torque ratings are based on the maximum intermittant torque rating of 250 lb-ft torque for the 55 tooth gear in the AT-540 series transmission.

NOTE: Speeds shown are with engine RPM at or above torque converter lockup speed. If the P.T.O. is going to be operated below torque converter lockup speeds, contact your CHELSEA distributor for specific speeds and torque requirements.

NOTE: 378840 street tee required for pressure lube and must be purchased separately. Only the pressure lube line 328075X (line to the idler pin) is included with the P.T.O. For 270/271 Series due to varying valve installation locations on the vehicle installer must supply the following hoses or order the following separately. One 329087X (line from tranny to valve) and two 328075X (valve dump back to PTO housing & valve to P.T.O. clutch).

NOTE: For 230 & 270 Series rated at 300 lb/ft. Without pressure lube option reduce intermittent torque rating to 250 lb/ft.

NOTE: The "AJ" input gear designator shown on this application, which is a full addendum 6-pitch gear, is recommended for use on these transmissions. The "AH" input gear designator, which is a 6/8-pitch gear, can also be used on these transmissions; however, you may notice some additional rattle between the meshing gears.NOTE: Do not use adapter gear assemblies on any Allison automatic transmissions.

NOTE: If Ordering the 230/231 Series with the Shaft Brake Option, order the "BA" Output for Automatic Transmissions and the "BD" Output for Manual Transmissions.

(1) Input Gear Part No. 5-P-569
(2) Input Gear Part No. 5-P-1418
(3) Input Gear Part No. 5-P-567
(4) Input Gear Part No. 5-P-568
(5) Input Gear Part No. 5-P-695
(6) Input Gear Part No. 5-P-769
(7) Input Gear Part No. 5-P-770

MT-640	MT-654
MT-643	
MT-644	
MT-650	
MT-653	

RIGHT SIDE ONLY

TRANSMISSION GEAR DATA:
R.H. 6-Bolt Opening Gear FORWARD of Centerline
64 Teeth - SPUR

PITCH LINE TO APERTURE FACE:
1.0850" (27.5600MM)

Caution: Application Approval Required for P.T.O. Output Shaft Speeds Above 2500 R.P.M.

P.T.O. Model	Inter. Torq.	Dir. Rot.	Engine % Hi	Engine % Rev	Filler Block	Adapter Assy.	Stud Kit	RIGHT Side P.T.O. Model	Inter. Torq.	Dir. Rot.	Engine % Hi	Engine % Rev	Filler Block	Adapter Assy.	Stud Kit
ONE SPEED - TWO GEAR - MECHANICAL SHIFT															
								221XCAJP-*3	250	Eng	124				Furnished
								221XEAJP-*3	250	Eng	137				Furnished
								442XBAHP-*3 (1)	250	Eng	104				Furnished
ONE SPEED - TWO GEAR - POWERSHIFT (HYDRAULIC)															
								270XAAJP-*3	300	Eng	87				Furnished
								270XBAJP-*3	300	Eng	113				Furnished
								270XDAJP-*3	300	Eng	131				Furnished
								270XKAJP-*3	300	Eng	177				Furnished
								271MAAJP-*5	250	Eng	87				Furnished
								271MBAJP-*5	250	Eng	113				Furnished
								271MDAJP-*5	250	Eng	131				Furnished
								271MKAJP-*5	250	Eng	177				Furnished
ONE SPEED - TWO GEAR - POWERSHIFT (AIR)															
								230XAAJP-*3	300	Eng	87				Furnished
								230XBAJP-*3	300	Eng	113				Furnished
								230XDAJP-*3	300	Eng	131				Furnished
								230XKAJP-*3	300	Eng	177				Furnished
								230XQAJP-*3	300	Eng	235				Furnished
								231MAAJP-*5	250	Eng	87				Furnished
								231MBAJP-*5	250	Eng	113				Furnished
								231MDAJP-*5	250	Eng	131				Furnished
								231MKAJP-*5	250	Eng	177				Furnished
								231MQAJP-*5	250	Eng	235				Furnished

NOTE: Do not use adapter gear assemblies on any Allison automatic transmissions.

NOTE: Speeds shown are with engine RPM at, or above, torque converter lockup speed. If the P.T.O. is going to be operated below torque converter lockup speeds, contact your CHELSEA distributor for specific speeds and torque requirements.

NOTE: 378970 street tee required for pressure lube for 1975 and after, and must be purchased separately. 378880 street tee required for pressure lube prior to 1975. Only the pressure lube line 328075X (line to the idler pin) is included with the P.T.O. For 270/271 Series due to varying valve installation locations on the vehicle installer must supply the following hoses or order the following separately. One 329087X (line from tranny to valve) and two 328075X (valve dump back to PTO housing & valve to P.T.O. clutch).

NOTE: For 270/271 series rated at 300 lb/ft. Without pressure lube option reduce intermittent torque rating to 250 lb/ft.

NOTE: The "AJ" input gear designator shown on this application, which is a full addendum 6-pitch gear, is recommended for use on these transmissions. The "AH" input gear designator, which is a 6/8-pitch gear, can also be used on these transmissions; however, you may notice some additional rattle between the meshing gears.

NOTE: If the 270/271/230/231 Series is ordered with the Drag Brake option the rear cover of the P.T.O. will interfere with the transmission clutch housing.

(1) Input Gear Part No. 5-P-1418

Parker Hannifin Corporation
Chelsea Products Division
Olive Branch, MS 38654 USA

CLBT-750	HT-740D	HT-750DP	HT-754CR
CLBT-754	HT-740DRD	HT-750DRD	
CLT-750	HT-740T	HT-750DT	
CLT-754	HT-750CRD	HT-750HT	
HT-740CRD	HT-750D	HT-750T	

LEFT SIDE ONLY

TRANSMISSION GEAR DATA:

L.H. 6-Bolt Opening Gear FORWARD of Centerline

78 Teeth - SPUR

PITCH LINE TO APERTURE FACE:

1.0850" (27.5600MM)

Caution: Application Approval Required for P.T.O. Output Shaft Speeds Above 2500 R.P.M.

LEFT Side P.T.O. Model	Inter. Torq.	Dir. Rot.	Engine % Hi	Engine % Rev	Filler Block	Adapter Assy.	Stud Kit	P.T.O. Model	Inter. Torq.	Dir. Rot.	Engine % Hi	Engine % Rev	Filler Block	Adapter Assy.	Stud Kit
ONE SPEED - TWO GEAR - MECHANICAL SHIFT															
221XCAJP-*5	250	Eng	151				Furnished								
221XEAJP-*5	250	Eng	167				Furnished								
442XBAHP-*5 (1)	250	Eng	127				Furnished								
ONE SPEED - TWO GEAR - POWERSHIFT (HYDRAULIC)															
270XAAJP-*5	300	Eng	106				Furnished								
270XBAJP-*5	300	Eng	138				Furnished								
270XDAJP-*5	300	Eng	159				Furnished								
270XKAJP-*5	300	Eng	215				Furnished								
271MAAJP-*5	250	Eng	106				Furnished								
271MBAJP-*5	250	Eng	138				Furnished								
271MDAJP-*5	250	Eng	159				Furnished								
271MKAJP-*5	250	Eng	215				Furnished								
ONE SPEED - TWO GEAR - POWERSHIFT (AIR)															
230XAAJP-*5	300	Eng	106				Furnished								
230XBAJP-*5	300	Eng	138				Furnished								
230XDAJP-*5	300	Eng	159				Furnished								
230XKAJP-*5	300	Eng	215				Furnished								
230XQAJP-*5	300	Eng	287				Furnished								
231MAAJP-*5	250	Eng	106				Furnished								
231MBAJP-*5	250	Eng	138				Furnished								
231MDAJP-*5	250	Eng	159				Furnished								
231MKAJP-*5	250	Eng	215				Furnished								
231MQAJP-*5	250	Eng	287				Furnished								

NOTE: Do not use adapter gear assemblies on any Allison automatic transmissions.

NOTE: Speeds shown are with engine RPM at, or above, torque converter lockup speed. If the P.T.O. is going to be operated below torque converter lockup speeds, contact your CHELSEA distributor for specific speeds and torque requirements.

NOTE: 378897 street tee required for pressure lube and must be purchased separately. Only the pressure lube line 328075X (line to the idler pin) is included with the P.T.O. For 270/271 Series due to varying valve installation locations on the vehicle installer must supply the following hoses or order the following separately. One 329087X (line from tranny to valve) and two 328075X (valve dump back to PTO housing & valve to P.T.O. clutch).

NOTE: Aperture is located at 10 o'clock when viewed from rear of transmission.

NOTE: The "AJ" input gear designator shown on this application, which is a full addendum 6-pitch gear, is recommended for use on these transmissions. The "AH" input gear designator, which is a 6/8-pitch gear, can also be used on these transmissions; however, you may notice some additional rattle between the meshing gears.

NOTE: If Ordering the 230/231 Series with the Shaft Brake Option, order the "BA" Output for Automatic Transmissions and the "BD" Output for Manual Transmissions.

(1) Input Gear Part No. 5-P-1418

M5600
M6600
S5600
S6600

TOP SIDE ONLY

TRANSMISSION GEAR DATA:
TOP 8-Bolt Opening Gear REAR of Centerline
38 Teeth - SPUR

PITCH LINE TO APERTURE FACE:
.8020" (20.3708MM)

RIGHT SIDE ONLY

TRANSMISSION GEAR DATA:
R.H. 8-Bolt Opening Gear REAR of Centerline
46 Teeth - SPUR

PITCH LINE TO APERTURE FACE:
.8020" (20.3708MM)

Caution: Application Approval Required for P.T.O. Output Shaft Speeds Above 2500 R.P.M.

P.T.O. Model	Inter. Torq.	Dir. Rot.	Engine % Hi	Engine % Rev	Filler Block	Adapter Assy.	Stud Kit	RIGHT Side P.T.O. Model	Inter. Torq.	Dir. Rot.	Engine % Hi	Engine % Rev	Filler Block	Adapter Assy.	Stud Kit
ONE SPEED - TWO GEAR - MECHANICAL SHIFT															
221ZCAKP-*6	250	Opp	89			328564X	Furnished	221ZCAKP-*4	250	Eng	89			328564X	Furnished
221ZEAKP-*6	250	Opp	99			328564X	Furnished	221ZEAKP-*4	250	Eng	99			328564X	Furnished
823XBAKP-*6 (1)	500	Opp	81				Furnished	823XBAKP-*4 (1)	500	Eng	81				Furnished
823XDAKP-*6 (2)	500	Opp	96				Furnished	880XBAKP-*4 (6)	500	Eng	81				Furnished
823XGAKP-*6 (3)	500	Opp	104				Furnished								
823XJAKP-*6 (4)	500	Opp	122				Furnished								
823XMAKP-*6 (5)	500	Opp	144				Furnished								
880XBAKP-*6 (6)	500	Opp	81				Furnished								
880XDAKP-*6 (7)	500	Opp	96				Furnished								
880XGAKP-*6 (8)	500	Opp	104				Furnished								
880XJAKP-*6 (9)	500	Opp	122				Furnished								
880XMAKP-*6 (10)	500	Opp	144				Furnished								
ONE SPEED - SINGLE GEAR - POWERSHIFT (HYDRAULIC)															
800XMAKP-*4	250	Eng	144				Furnished								
ONE SPEED - TWO GEAR - POWERSHIFT (HYDRAULIC)															
270XAAKP-*6	250	Opp	62			328481X	Furnished	270XAAKP-*4	300	Eng	62			328481X	Furnished
270XDAKP-*6	250	Opp	94			328481X	Furnished	270XDAKP-*4	300	Eng	94			328481X	Furnished
270XKAKP-*6	225	Opp	127			328481X	Furnished	270XKAKP-*4	300	Eng	127			328481X	Furnished
852XBAKP-*6	500	Opp	81				Furnished	852XBAKP-*4	500	Eng	81				Furnished
852XGAKP-*6	500	Opp	104				Furnished	852XGAKP-*4	500	Eng	104				Furnished
852XJAKP-*6	500	Opp	122				Furnished	852XJAKP-*4	500	Eng	122				Furnished
ONE SPEED - TWO GEAR - POWERSHIFT (AIR)															
885XBAKP-*6 (6)	500	Opp	81				Furnished	885XBAKP-*4 (6)	500	Eng	81				Furnished
885XGAKP-*6 (8)	500	Opp	104				Furnished								
885XJAKP-*6 (9)	500	Opp	122				Furnished								
885XMAKP-*6 (10)	500	Opp	144				Furnished								

NOTE: CRT-5630 & 5631 have only R.H. openings

NOTE: Do not use Adapter Gear Assemblies on any Allison Automatic Transmissions.

NOTE: Right Side opening is optional. Input gear interference prohibits use of any P.T.O.s other than those shown.

NOTE: Only the pressure lube line 328075X (line to the idler pin) is included with the P.T.O. For 270/271 Series due to varying valve installation locations on the vehicle installer must supply the following hoses or order the following separately. One 329087X (line from tranny to valve) and two 328075X (valve dump back to PTO housing & valve to P.T.O. clutch).

(1) Input Gear Part No. 5-P-223
(2) Input Gear Part No. 5-P-293
(3) Input Gear Part No. 5-P-294
(4) Input Gear Part No. 5-P-224
(5) Input Gear Part No. 5-P-284
(6) Input Gear Part No. 5-P-1106
(7) Input Gear Part No. 5-P-1107
(8) Input Gear Part No. 5-P-1108
(9) Input Gear Part No. 5-P-1109
(10) Input Gear Part No. 5-P-1110

CLT-9485	M9800
CLT-9880	S9600
CLT-9884	S9800
CLT-9885	
M9600	

TOP SIDE ONLY

TRANSMISSION GEAR DATA:
TOP 8-Bolt Opening Gear REAR of Centerline
39 Teeth - SPUR

PITCH LINE TO APERTURE FACE:
0.8100" (20.5700MM)

RIGHT SIDE ONLY

TRANSMISSION GEAR DATA:
R.H. 8-Bolt Opening Gear REAR of Centerline
52 Teeth - SPUR

PITCH LINE TO APERTURE FACE:
0.8100" (2.0574MM)

Caution: Application Approval Required for P.T.O. Output Shaft Speeds Above 2500 R.P.M.

P.T.O. Model	Inter. Torq.	Dir. Rot.	Engine % Hi	Engine % Rev	Filler Block	Adapter Assy.	Stud Kit	RIGHT Side P.T.O. Model	Inter. Torq.	Dir. Rot.	Engine % Hi	Engine % Rev	Filler Block	Adapter Assy.	Stud Kit
ONE SPEED - TWO GEAR - MECHANICAL SHIFT															
221ZCAKP-*6	250	Opp	114			328564X	Furnished	221ZCAKP-*4	250	Eng	114			328564X	Furnished
221ZEAKP-*6	250	Opp	127			328564X	Furnished	221ZEAKP-*4	250	Eng	126			328564X	Furnished
823XBAKP-*6 (1)	500	Opp	104				Furnished	823XBAKP-*4 (1)	500	Eng	104				Furnished
823XDAKP-*6 (2)	500	Opp	123				Furnished	880XBAKP-*4 (6)	500	Eng	104				Furnished
823XGAKP-*6 (3)	500	Opp	134				Furnished								
823XJAKP-*6 (4)	500	Opp	157				Furnished								
823XMAKP-*6 (5)	500	Opp	185				Furnished								
880XBAKP-*6 (6)	500	Opp	104				Furnished								
880XDAKP-*6 (7)	500	Opp	123				Furnished								
880XGAKP-*6 (8)	500	Opp	134				Furnished								
880XJAKP-*6 (9)	500	Opp	157				Furnished								
880XMAKP-*6 (10)	500	Opp	185				Furnished								
ONE SPEED - SINGLE GEAR - POWERSHIFT (HYDRAULIC)															
800XMAKP-*4	250	Eng	185				Furnished								
ONE SPEED - TWO GEAR - POWERSHIFT (HYDRAULIC)															
270XAAKP-*6	250	Opp	80			328481X	Furnished	270XAAKP-*4	300	Eng	80			328481X	Furnished
270XDAKP-*6	250	Opp	121			328481X	Furnished	270XDAKP-*4	300	Eng	121			328481X	Furnished
852XBAKP-*6	500	Opp	104				Furnished	852XBAKP-*4	500	Eng	104				Furnished
852XGAKP-*6	500	Opp	134				Furnished								
852XJAKP-*6	500	Opp	157				Furnished								
ONE SPEED - TWO GEAR - POWERSHIFT (AIR)															
885XBAKP-*6 (6)	500	Opp	104				Furnished	885XBAKP-*4 (6)	500	Eng	104				Furnished
885XGAKP-*6 (8)	500	Opp	134				Furnished								
885XJAKP-*6 (9)	500	Opp	157				Furnished								
885XMAKP-*6 (10)	500	Opp	185				Furnished								

NOTE: R.H. opening is optional. Input gear interference prohibits use of any P.T.O. other than those shown.

NOTE: Do not use Adapter Gear Assemblies on any Allison Automatic Transmissions.

NOTE: Use a 3/8" NPT to 1/4" NPT pipe reducer to adapte to the pressure lube hose supplied with the unit.

NOTE: The "CLT or CLBT" prefix refers to an engine driven section mounted to the front of the transmission.

NOTE: The 8000 and 9000 Series transmission models use all the same P.T.O. models.

NOTE: Only the pressure lube line 328075X (line to the idler pin) is included with the P.T.O. For 270/271 Series due to varying valve installation locations on the vehicle installer must supply the following hoses or order the following separately. One 329087X (line from tranny to valve) and two 328075X (valve dump back to PTO housing & valve to P.T.O. clutch).

(1) Input Gear Part No. 5-P-223
(2) Input Gear Part No. 5-P-293
(3) Input Gear Part No. 5-P-294
(4) Input Gear Part No. 5-P-224
(5) Input Gear Part No. 5-P-284
(6) Input Gear Part No. 5-P-1106
(7) Input Gear Part No. 5-P-1107
(8) Input Gear Part No. 5-P-1108
(9) Input Gear Part No. 5-P-1109
(10) Input Gear Part No. 5-P-1110

Parker Hannifin Corporation
Chelsea Products Division
Olive Branch, MS 38654 USA

CLBT-750
CLBT-754
CLT-750
CLT-754
HT-750CRD

LEFT SIDE ONLY

TRANSMISSION GEAR DATA:
L.H. 8-Bolt Opening Gear REAR of Centerline
64 Teeth - SPUR
PITCH LINE TO APERTURE FACE:
.8100" (20.5740MM)

TOP SIDE ONLY

TRANSMISSION GEAR DATA:
TOP 8-Bolt Opening Gear REAR of Centerline
40 Teeth - SPUR
PITCH LINE TO APERTURE FACE:
.8100" (20.5740MM)

Caution: Application Approval Required for P.T.O. Output Shaft Speeds Above 2500 R.P.M.

LEFT Side P.T.O. Model	Inter. Torq.	Dir. Rot.	Engine % Hi	Engine % Rev	Filler Block	Adapter Assy.	Stud Kit	TOP Side P.T.O. Model	Inter. Torq.	Dir. Rot.	Engine % Hi	Engine % Rev	Filler Block	Adapter Assy.	Stud Kit
ONE SPEED - TWO GEAR - MECHANICAL SHIFT															
221ZCAKX-*6(#)	250	Opp	104			328564X	Furnished	221ZCAKP-*4(#)	250	Opp	104			328564X	Furnished
221ZEAKX-*6(#)	250	Opp	116			328564X	Furnished	221ZEAKP-*4(#)	250	Opp	116			328564X	Furnished
823XBAKX-*6(#) (1)	500	Opp	95				Furnished	823XBAKP-*4(#) (1)	500	Opp	95				Furnished
823XDAKX-*6(#) (2)	500	Opp	113				Furnished	823XDAKP-*4(#) (2)	500	Opp	112				Furnished
823XGAKX-*6(#) (3)	500	Opp	122				Furnished	823XGAKP-*4(#) (3)	500	Opp	122				Furnished
823XJAKX-*6(#) (4)	500	Opp	144				Furnished	823XJAKP-*4(#) (4)	500	Opp	144				Furnished
823XMAKX-*6(#) (5)	500	Opp	169				Furnished	823XMAKP-*4(#) (5)	500	Opp	169				Furnished
880XBAKX-*6(#) (6)	500	Opp	95				Furnished	880XBAKP-*4(#) (6)	500	Opp	95				Furnished
880XDAKX-*6(#) (7)	500	Opp	113				Furnished	880XDAKP-*4(#) (7)	500	Opp	112				Furnished
880XGAKX-*6(#) (8)	500	Opp	122				Furnished	880XGAKP-*4(#) (8)	500	Opp	122				Furnished
880XJAKX-*6(#) (9)	500	Opp	144				Furnished	880XJAKP-*4(#) (9)	500	Opp	144				Furnished
880XMAKX-*6(#) (10	500	Opp	169				Furnished	880XMAKP-*4(#) (10)	500	Opp	169				Furnished
ONE SPEED - SINGLE GEAR - POWERSHIFT (HYDRAULIC)															
800XMAKP-*4	250	Eng	169				Furnished	800XMAKP-*4	250	Eng	169				Furnished
ONE SPEED - TWO GEAR - POWERSHIFT (HYDRAULIC)															
270XAAKX-*6	250	Opp	73			328481X	Furnished	270XAAKP-*4	300	Opp	73			328481X	Furnished
270XDAKX-*6	250	Opp	110			328481X	Furnished	270XDAKP-*4	300	Opp	110			328481X	Furnished
270XKAKX-*6	225	Opp	149			328481X	Furnished	270XKAKP-*4	300	Opp	149			328481X	Furnished
852XBAKP-*6	500	Opp	95				Furnished	852XBAKP-*4	500	Opp	95				Furnished
852XGAKP-*6	500	Opp	122				Furnished	852XGAKP-*4	500	Opp	122				Furnished
852XJAKP-*6	500	Opp	144				Furnished	852XJAKP-*4	500	Opp	144				Furnished
ONE SPEED - TWO GEAR - POWERSHIFT (AIR)															
885XBAKX-*6 (6)	500	Opp	95				Furnished	885XBAKP-*4 (6)	500	Opp	95				Furnished
885XGAKX-*6 (8)	500	Opp	122				Furnished	885XGAKP-*4 (8)	500	Opp	122				Furnished
885XJAKX-*6 (9)	500	Opp	144				Furnished	885XJAKP-*4 (9)	500	Opp	144				Furnished
885XMAKX-*6 (10)	500	Opp	169				Furnished	885XMAKP-*4 (10)	500	Opp	169				Furnished
ONE SPEED - FORWARD & REVERSE															
863XBAKX-*4(#)	500	Opp	95	118			Furnished								

NOTE: For S.A.E. 6 -bolt aperture located 40° from vertical or approximately 10 o'clock when viewed from rear, see application number ALL-7 or contact your CHELSEA distributor for P.T.O. applications prior to serial build number 32404. For applications after 32404 see application number ALL-6.

NOTE: Left side opening located at approximately 7 o'clock, right side at 1 o'clock as viewed from rear of transmission.

NOTE: Do not use Adapter Gear Assemblies on any Allison Automatic Transmission.

NOTE: 378897 Street Tee required for pressure lube P.T.O.s and must be purchased separately. Only the pressure lube line 328075X (line to the idler pin) is included with the P.T.O. For 270/271 Series due to varying valve installation locations on the vehicle installer must supply the following hoses or order the following separately. One 329087X (line from tranny to valve) and two 328075X (valve dump back to PTO housing & valve to P.T.O. clutch).

NOTE: **(#)** Engine must be stopped in order to engage/disengage Mechanical shift P.T.O.s.

(1) Input Gear Part No. 5-P-223
(2) Input Gear Part No. 5-P-293
(3) Input Gear Part No. 5-P-294
(4) Input Gear Part No. 5-P-224
(5) Input Gear Part No. 5-P-284
(6) Input Gear Part No. 5-P-1106
(7) Input Gear Part No. 5-P-1107
(8) Input Gear Part No. 5-P-1108
(9) Input Gear Part No. 5-P-1109
(10) Input Gear Part No. 5-P-1110

January 2008

Parker Hannifin Corporation
Chelsea Products Division
Olive Branch, MS 38654 USA

3000 MH	B 300
3000 RDS	B 400
3000 TRV	MD-3060P
3200 TRV	MD-3070P
3500 RDS	MD-3560P

LEFT SIDE ONLY

TRANSMISSION GEAR DATA:
L.H. 10-Bolt Opening Gear FORWARD of Centerline
68 Teeth - L.H. HELIX
PITCH LINE TO APERTURE FACE:
1.7800" (45.2100MM)

RIGHT SIDE ONLY

TRANSMISSION GEAR DATA:
R.H. 10-Bolt Opening Gear FORWARD of Centerline
68 Teeth - L.H. HELIX
PITCH LINE TO APERTURE FACE:
1.7800" (45.2100MM)

Caution: Application Approval Required for P.T.O. Output Shaft Speeds Above 2500 R.P.M.

LEFT Side P.T.O. Model	Inter. Torq.	Dir. Rot.	Engine % Hi	Engine % Rev	Filler Block	Adapter Assy.	Stud Kit	RIGHT Side P.T.O. Model	Inter. Torq.	Dir. Rot.	Engine % Hi	Engine % Rev	Filler Block	Adapter Assy.	Stud Kit
ONE SPEED - TWO GEAR - CONSTANT MESH															
267SBFJP-*5 (1)	402	Eng	72			Furnished		267SBFJP-*3 (1)	402	Eng	72			Furnished	
267SDFJP-*5 (2)	390	Eng	87			Furnished		267SDFJP-*3 (2)	390	Eng	87			Furnished	
267SGFJP-*5 (3)	360	Eng	103			Furnished		267SGFJP-*3 (3)	360	Eng	103			Furnished	
267SMFJP-*5 (4)	318	Eng	129			Furnished		267SMFJP-*3 (4)	318	Eng	129			Furnished	
267SSFJP-*5(*) (5)	265	Eng	161			Furnished		267SSFJP-*3(*) (5)	265	Eng	161			Furnished	
267XBFJP-*5 (6)	335	Eng	72			Furnished		267XBFJP-*3 (6)	335	Eng	72			Furnished	
267XDFJP-*5 (7)	325	Eng	87			Furnished		267XDFJP-*3 (7)	325	Eng	87			Furnished	
267XGFJP-*5 (8)	300	Eng	103			Furnished		267XGFJP-*3 (8)	300	Eng	103			Furnished	
267XMFJP-*5 (9)	265	Eng	129			Furnished		267XMFJP-*3 (9)	265	Eng	129			Furnished	
267XSFJP-*5(*) (5)	250	Eng	161			Furnished		267XSFJP-*3(*) (5)	250	Eng	161			Furnished	
269SBFJW-*3 (1)	402	Eng	68			Furnished		269SBFJW-*3 (1)	402	Eng	68			Furnished	
269SDFJW-*3 (2)	390	Eng	81			Furnished		269SDFJW-*3 (2)	390	Eng	81			Furnished	
269SGFJW-*3 (3)	360	Eng	96			Furnished		269SGFJW-*3 (3)	300	Eng	96			Furnished	
269SMFJW-*3 (10)	318	Eng	119			Furnished		269SMFJW-*3 (10)	318	Eng	119			Furnished	
269XBFJW-*3 (6)	335	Eng	68			Furnished		269XBFJW-*3 (6)	335	Eng	68			Furnished	
269XDFJW-*3 (7)	335	Eng	81			Furnished		269XDFJW-*3 (7)	335	Eng	81			Furnished	
269XGFJW-*3 (8)	300	Eng	96			Furnished		269XGFJW-*3 (8)	360	Eng	96			Furnished	
269XMFJW-*3 (9)	300	Eng	119			Furnished		269XMFJW-*3 (9)	300	Eng	119			Furnished	
867XGFJP-*5 (11)	575	Eng	76			Furnished		867XGFJP-*5 (11)	575	Eng	76			Furnished	
867XMFJP-*5 (12)	490	Eng	98			Furnished		867XMFJP-*5 (12)	490	Eng	98			Furnished	
867XRFJP-*5 (13)	415	Eng	117			Furnished		867XRFJP-*5 (13)	415	Eng	117			Furnished	
867XTFJP-*5 (14)	350	Eng	140			Furnished		867XTFJP-*5 (14)	350	Eng	140			Furnished	
ONE SPEED - TWO GEAR - POWERSHIFT (HYDRAULIC)															
277HBFJP-*5 (6)	335	Eng	72			Furnished		277SBFJP-*5 (6)	402	Eng	72			Furnished	
277HDFJP-*5 (7)	325	Eng	87			Furnished		277SDFJP-*5 (7)	390	Eng	87			Furnished	
277HGFJP-*5 (8)	300	Eng	103			Furnished		277SGFJP-*5 (8)	360	Eng	103			Furnished	
277HMFJP-*5 (9)	265	Eng	129			Furnished		277SMFJP-*5 (9)	318	Eng	129			Furnished	
277HSFJP-*5 (5)	250	Eng	161			Furnished		277SSFJP-*5(*) (5)	265	Eng	161			Furnished	
277SBFJP-*5 (1)	402	Eng	72			Furnished		277XBFJP-*5 (6)	335	Eng	72			Furnished	

Continued Next Page

NOTE: This P.T.O. opening is a non-standard 10-Bolt opening.
NOTE: When direct mounting a Parker P2 060 piston pump to a 267 Series P.T.O. on the left (drivers) side opening, the P.T.O. must be ordered as a "3" assembly arrangement for pump clearance.
NOTE: Pump brackets for the Parker P2 060 piston pump are available and must be ordered separately. For the 267 Series Left Side 329413-1X, for the 277 Series Right Side 329413-2X and for the 278 Right Side 329413-3X.
NOTE: All models require a hose assembly. For the 267 Series, use 329130-1X for the left side and 329130-4X for the right side. For the 269, 277, 278 and 859 Series, use 329130-5X for the left side and 329075-1X for the right side. THESE HOSE ASSEMBLIES MUST BE ORDERED SEPARATELY.
NOTE: The 269 Series is available with a Wet Spline "XY" Output Only.
NOTE: The 267 Series is not available in the "3" arrangement with an "XK" output due to interference with the pressure lube fitting.
NOTE: Wiring harness 379926 must be used in 2003 GM trucks for the 277, 278 and 859 Series P.T.O.s if the GM provided in-dash P.T.O. switch is used to control P.T.O. operations.
NOTE: Do not use adapter gear assemblies on any Allison automatic transmissions.
NOTE: 277H was designed and released for Hino Chassis 338 (Left Side Only). The 379502 Pressure Switch and Shifter Valve must be remotely mounted from the housing to clear the vehicle spring shackle. The P.T.O. must be ordered as a Remote Mount Shift Option ("H") and comes with 329441X Pressure Switch Relocation Kit. If using a 277G mounting option order 329441X separately.
NOTE: **(*)** Only for MD transmissions built after June 5, 1997 starting with serial number 6510119021.

(1) Input Gear Part No. 5-P-1350
(2) Input Gear Part No. 5-P-1293
(3) Input Gear Part No. 5-P-1225
(4) Input Gear Part No. 5-P-1351
(5) Input Gear Part No. 5-P-1173
(6) Input Gear Part No. 5-P-912
(7) Input Gear Part No. 5-P-913
(8) Input Gear Part No. 5-P-914
(9) Input Gear Part No. 5-P-915
(10) Input Gear Part No. 5-P-1391
(11) Input Gear Part No. 5-P-1160
(12) Input Gear Part No. 5-P-1161
(13) Input Gear Part No. 5-P-1162
(14) Input Gear Part No. 5-P-1212

3000 MH	B 300
3000 RDS	B 400
3000 TRV	MD-3060P
3200 TRV	MD-3070P
3500 RDS	MD-3560P

LEFT SIDE ONLY

TRANSMISSION GEAR DATA:
L.H. 10-Bolt Opening Gear FORWARD of Centerline
68 Teeth - L.H. HELIX
PITCH LINE TO APERTURE FACE:
1.7800" (45.2100MM)

RIGHT SIDE ONLY

TRANSMISSION GEAR DATA:
R.H. 10-Bolt Opening Gear FORWARD of Centerline
68 Teeth - L.H. HELIX
PITCH LINE TO APERTURE FACE:
1.7800" (45.2100MM)

Caution: Application Approval Required for P.T.O. Output Shaft Speeds Above 2500 R.P.M.

ONE SPEED - TWO GEAR - POWERSHIFT (HYDRAULIC)

LEFT Side P.T.O. Model	Inter. Torq.	Dir. Rot.	Engine % Hi	Engine % Rev	Filler Block	Adapter Assy.	Stud Kit	RIGHT Side P.T.O. Model	Inter. Torq.	Dir. Rot.	Engine % Hi	Engine % Rev	Filler Block	Adapter Assy.	Stud Kit
277SDFJP-*5 (2)	390	Eng	87				Furnished	277XDFJP-*5 (7)	325	Eng	87				Furnished
277SGFJP-*5 (3)	360	Eng	103				Furnished	277XGFJP-*5 (8)	300	Eng	103				Furnished
277SMFJP-*5 (4)	318	Eng	129				Furnished	277XMFJP-*5 (9)	265	Eng	129				Furnished
277SSFJP-*5(*) (5)	265	Eng	161				Furnished	277XSFJP-*5(*) (5)	250	Eng	161				Furnished
277XBFJP-*5 (6)	335	Eng	72				Furnished	278SBFJP-*3 (1)	402	Eng	68				Furnished
277XDFJP-*5 (7)	325	Eng	87				Furnished	278SDFJP-*3 (2)	390	Eng	81				Furnished
277XGFJP-*5 (8)	300	Eng	103				Furnished	278SGFJP-*3 (3)	360	Eng	96				Furnished
277XMFJP-*5 (9)	265	Eng	129				Furnished	278SMFJP-*3 (4)	318	Eng	119				Furnished
277XSFJP-*5(*) (5)	250	Eng	161				Furnished	278SSFJP-*3 (5)	265	Eng	147				Furnished
278SBFJP-*3 (1)	402	Eng	68				Furnished	278STFJP-*3 (15)	240	Eng	173				Furnished
278SDFJP-*3 (2)	390	Eng	81				Furnished	278XBFJP-*3 (6)	335	Eng	68				Furnished
278SGFJP-*3 (3)	360	Eng	96				Furnished	278XDFJP-*3 (7)	325	Eng	81				Furnished
278SMFJP-*3 (4)	318	Eng	119				Furnished	278XGFJP-*3 (8)	300	Eng	96				Furnished
278SSFJP-*3 (5)	265	Eng	147				Furnished	278XMFJP-*3 (9)	265	Eng	119				Furnished
278STFJP-*3 (15)	240	Eng	173				Furnished	278XSFJP-*3 (5)	250	Eng	147				Furnished
278XBFJP-*3 (6)	335	Eng	68				Furnished	278XTFJP-*3 (16)	225	Eng	173				Furnished
278XDFJP-*3 (7)	325	Eng	81				Furnished	859XGFJP-*5 (11)	575	Eng	76				Furnished
278XGFJP-*3 (8)	300	Eng	96				Furnished	859XJFJP-*5 (17)	525	Eng	86				Furnished
278XMFJP-*3 (9)	265	Eng	119				Furnished	859XMFJP-*5 (12)	490	Eng	98				Furnished
278XSFJP-*3 (5)	250	Eng	147				Furnished	859XRFJP-*5 (13)	415	Eng	117				Furnished
278XTFJP-*3 (16)	225	Eng	173				Furnished	859XSFJP-*5 (18)	385	Eng	128				Furnished
859XGFJP-*5 (11)	575	Eng	76				Furnished	859XTFJP-*5 (14)	350	Eng	140				Furnished
859XJFJP-*5 (17)	525	Eng	86				Furnished	859XWFJP-*5(*) (19)	285	Eng	168				Furnished
859XMFJP-*5 (12)	490	Eng	98				Furnished								
859XRFJP-*5 (13)	415	Eng	117				Furnished								
859XSFJP-*5 (18)	385	Eng	128				Furnished								
859XTFJP-*5 (14)	350	Eng	140				Furnished								
859XWFJP-*5(*) (19)	285	Eng	168				Furnished								

NOTE: This P.T.O. opening is a non-standard 10-Bolt opening.
NOTE: When direct mounting a Parker P2 060 piston pump to a 267 Series P.T.O. on the left (drivers) side opening, the P.T.O. must be ordered as a "3" assembly arrangement for pump clearance.
NOTE: Pump brackets for the Parker P2 060 piston pump are available and must be ordered separately. For the 267 Series Left Side 329413-1X, for the 277 Series Right Side 329413-2X and for the 278 Right Side 329413-3X.
NOTE: All models require a hose assembly. For the 267 Series, use 329130-1X for the left side and 329130-4X for the right side. For the 269, 277, 278 and 859 Series, use 329130-5X for the left side and 329075-1X for the right side. THESE HOSE ASSEMBLIES MUST BE ORDERED SEPARATELY.
NOTE: The 269 Series is available with a Wet Spline "XY" Output Only.
NOTE: The 267 Series is not available in the "3" arrangement with an "XK" output due to interference with the pressure lube fitting.
NOTE: Wiring harness 379926 must be used in 2003 GM trucks for the 277, 278 and 859 Series P.T.O.s if the GM provided in-dash P.T.O. switch is used to control P.T.O. operations.
NOTE: Do not use adapter gear assemblies on any Allison automatic transmissions.
NOTE: 277H was designed and released for Hino Chassis 338 (Left Side Only). The 379502 Pressure Switch and Shifter Valve must be remotely mounted from the housing to clear the vehicle spring shackle. The P.T.O. must be ordered as a Remote Mount Shift Option ("H") and comes with 329441X Pressure Switch Relocation Kit. If using a 277G mounting option order 329441X separately.
NOTE: **(*)** Only for MD transmissions built after June 5, 1997 starting with serial number 6510119021.

(1) Input Gear Part No. 5-P-1350
(2) Input Gear Part No. 5-P-1293
(3) Input Gear Part No. 5-P-1225
(4) Input Gear Part No. 5-P-1351
(5) Input Gear Part No. 5-P-1173
(6) Input Gear Part No. 5-P-912
(7) Input Gear Part No. 5-P-913
(8) Input Gear Part No. 5-P-914
(9) Input Gear Part No. 5-P-915
(11) Input Gear Part No. 5-P-1160
(12) Input Gear Part No. 5-P-1161
(13) Input Gear Part No. 5-P-1162
(14) Input Gear Part No. 5-P-1212
(15) Input Gear Part No. 5-P-1410
(16) Input Gear Part No. 5-P-1409
(17) Input Gear Part No. 5-P-1394
(18) Input Gear Part No. 5-P-1392
(19) Input Gear Part No. 5-P-1309

4000 EVS	4500 RDS	B 500
4000 MH	4700 EVS	HD-4060P
4000 RDS	4700 OFS	HD-4070P
4000 TRV	4700 RDS	HD-4560P
4500 EVS	4800 EVS	

LEFT SIDE ONLY

TRANSMISSION GEAR DATA:
L.H. 10-Bolt Opening Gear FORWARD of Centerline
97 Teeth - L.H. HELIX
PITCH LINE TO APERTURE FACE:
1.7799" (45.2100MM)

RIGHT SIDE ONLY

TRANSMISSION GEAR DATA:
R.H. 10-Bolt Opening Gear FORWARD of Centerline
97 Teeth - L.H. HELIX
PITCH LINE TO APERTURE FACE:
1.7799" (45.2100MM)

Caution: Application Approval Required for P.T.O. Output Shaft Speeds Above 2500 R.P.M.

ONE SPEED - TWO GEAR - CONSTANT MESH

LEFT Side P.T.O. Model	Inter. Torq.	Dir. Rot.	Engine % Hi	Engine % Rev	Filler Block	Adapter Assy.	Stud Kit	RIGHT Side P.T.O. Model	Inter. Torq.	Dir. Rot.	Engine % Hi	Engine % Rev	Filler Block	Adapter Assy.	Stud Kit
267SBFJP-*5 (1)	402	Eng	103			Furnished		267SBFJP-*3 (1)	402	Eng	103			Furnished	
267SDFJP-*5 (2)	390	Eng	123			Furnished		267SDFJP-*3 (2)	390	Eng	123			Furnished	
267SGFJP-*5 (3)	360	Eng	147			Furnished		267SGFJP-*3 (3)	360	Eng	147			Furnished	
267SMFJP-*5 (4)	318	Eng	184			Furnished		267SMFJP-*3 (4)	318	Eng	184			Furnished	
267SSFJP-*5 (5)	265	Eng	229			Furnished		267SSFJP-*3 (5)	265	Eng	229			Furnished	
267XBFJP-*5 (6)	335	Eng	103			Furnished		267XBFJP-*3 (6)	335	Eng	103			Furnished	
267XDFJP-*5 (7)	325	Eng	123			Furnished		267XDFJP-*3 (7)	325	Eng	123			Furnished	
267XGFJP-*5 (8)	300	Eng	147			Furnished		267XGFJP-*3 (8)	300	Eng	147			Furnished	
267XMFJP-*5 (9)	265	Eng	184			Furnished		267XMFJP-*3 (9)	265	Eng	184			Furnished	
267XSFJP-*5 (5)	250	Eng	229			Furnished		267XSFJP-*3 (5)	250	Eng	229			Furnished	
269SBFJW-*3 (1)	402	Eng	97			Furnished		269SBFJW-*3 (1)	402	Eng	97			Furnished	
269SDFJW-*3 (2)	390	Eng	115			Furnished		269SDFJW-*3 (2)	390	Eng	115			Furnished	
269SGFJW-*3 (3)	360	Eng	137			Furnished		269SGFJW-*3 (3)	360	Eng	137			Furnished	
269SMFJW-*3 (4)	318	Eng	170			Furnished		269SMFJW-*3 (4)	318	Eng	170			Furnished	
269XBFJW-*3 (6)	335	Eng	97			Furnished		269XBFJW-*3 (6)	335	Eng	97			Furnished	
269XDFJW-*3 (7)	335	Eng	115			Furnished		269XDFJW-*3 (7)	335	Eng	115			Furnished	
269XGFJW-*3 (8)	300	Eng	137			Furnished		269XGFJW-*3 (8)	300	Eng	137			Furnished	
269XMFJW-*3 (9)	300	Eng	170			Furnished		269XMFJW-*3 (9)	300	Eng	170			Furnished	
867XGFJP-*5 (10)	575	Eng	108			Furnished		867XGFJP-*5 (10)	575	Eng	108			Furnished	
867XMFJP-*5 (11)	490	Eng	139			Furnished		867XMFJP-*5 (11)	490	Eng	139			Furnished	
867XRFJP-*5 (12)	410	Eng	167			Furnished		867XRFJP-*5 (12)	410	Eng	167			Furnished	

ONE SPEED - TWO GEAR - POWERSHIFT (HYDRAULIC)

277SBFJP-*5 (1)	402	Eng	103			Furnished		277SBFJP-*5 (1)	402	Eng	103			Furnished	
277SDFJP-*5 (2)	390	Eng	123			Furnished		277SDFJP-*5 (2)	390	Eng	123			Furnished	
277SGFJP-*5 (3)	360	Eng	147			Furnished		277SGFJP-*5 (3)	360	Eng	147			Furnished	
277SMFJP-*5 (4)	318	Eng	184			Furnished		277SMFJP-*5 (4)	318	Eng	184			Furnished	
277SSFJP-*5 (5)	265	Eng	229			Furnished		277SSFJP-*5 (5)	265	Eng	229			Furnished	
277XBFJP-*5 (6)	335	Eng	103			Furnished		277XBFJP-*5 (6)	335	Eng	103			Furnished	
277XDFJP-*5 (7)	325	Eng	123			Furnished		277XDFJP-*5 (7)	325	Eng	123			Furnished	

Continued Next Page

CAUTION: The Torque Rating on Certain Ratios is Restricted by Allison Transmission to a Torque Limit of 685 Ft.lbs on their P.T.O. Drive Gear.

NOTE: The right side opening is located at approximately 1 o'clock when veiwed from the rear. All P.T.O.s mounted in this location require pressure lubrication.

NOTE: Do not use Adapter Gear Assemblies on any Allison Automatic Transmissions.

NOTE: All models require a hose assembly. For the 267 Series, use 329130-1X for the left side and 329130-6X for the right side. For the 269, 277, 278 and 859 Series, use 329130-4X for the left side and 329075-2X for the right side. THESE HOSE ASSEMBLIES MUST BE ORDERED SEPARATELY.

NOTE: 269 Series is available with a Wet Spline "XY" Output Only.

NOTE: 267 & 269 Series are constantly engaged and will always run when engine is running.

NOTE: The 267 Series is not available in the 3 arrangement with an "XK" output due to interference with the pressure lube fitting.

(1) Input Gear Part No. 5-P-1350
(2) Input Gear Part No. 5-P-1293
(3) Input Gear Part No. 5-P-1225
(4) Input Gear Part No. 5-P-1351
(5) Input Gear Part No. 5-P-1173
(6) Input Gear Part No. 5-P-912
(7) Input Gear Part No. 5-P-913
(8) Input Gear Part No. 5-P-914
(9) Input Gear Part No. 5-P-915
(10) Input Gear Part No. 5-P-1160
(11) Input Gear Part No. 5-P-1161
(12) Input Gear Part No. 5-P-1162

January 2008

Parker Hannifin Corporation
Chelsea Products Division
Olive Branch, MS 38654 USA

4000 EVS	4500 RDS	B 500
4000 MH	4700 EVS	HD-4060P
4000 RDS	4700 OFS	HD-4070P
4000 TRV	4700 RDS	HD-4560P
4500 EVS	4800 EVS	

LEFT SIDE ONLY

TRANSMISSION GEAR DATA:
L.H. 10-Bolt Opening Gear FORWARD of Centerline
97 Teeth - L.H. HELIX

PITCH LINE TO APERTURE FACE:
1.7799" (45.2100MM)

RIGHT SIDE ONLY

TRANSMISSION GEAR DATA:
R.H. 10-Bolt Opening Gear FORWARD of Centerline
97 Teeth - L.H. HELIX

PITCH LINE TO APERTURE FACE:
1.7799" (45.2100MM)

Caution: Application Approval Required for P.T.O. Output Shaft Speeds Above 2500 R.P.M.

ONE SPEED - TWO GEAR - POWERSHIFT (HYDRAULIC)

LEFT Side P.T.O. Model	Inter. Torq.	Dir. Rot.	Engine % Hi	Engine % Rev	Filler Block	Adapter Assy.	Stud Kit	RIGHT Side P.T.O. Model	Inter. Torq.	Dir. Rot.	Engine % Hi	Engine % Rev	Filler Block	Adapter Assy.	Stud Kit
277XGFJP-*5 (8)	300	Eng	147				Furnished	277XGFJP-*5 (8)	300	Eng	147				Furnished
277XMFJP-*5 (9)	265	Eng	184				Furnished	277XMFJP-*5 (9)	265	Eng	184				Furnished
277XSFJP-*5 (5)	250	Eng	229				Furnished	277XSFJP-*5 (5)	250	Eng	229				Furnished
278SBFJP-*3 (1)	402	Eng	97				Furnished	278SBFJP-*3 (1)	402	Eng	97				Furnished
278SDFJP-*3 (2)	390	Eng	115				Furnished	278SDFJP-*3 (2)	390	Eng	115				Furnished
278SGFJP-*3 (3)	360	Eng	137				Furnished	278SGFJP-*3 (3)	360	Eng	137				Furnished
278SMFJP-*3 (4)	318	Eng	170				Furnished	278SMFJP-*3 (4)	318	Eng	170				Furnished
278SSFJP-*3 (5)	265	Eng	210				Furnished	278SSFJP-*3 (5)	265	Eng	210				Furnished
278XBFJP-*3 (6)	335	Eng	97				Furnished	278XBFJP-*3 (6)	335	Eng	97				Furnished
278XDFJP-*3 (7)	325	Eng	115				Furnished	278XDFJP-*3 (7)	325	Eng	115				Furnished
278XGFJP-*3 (8)	300	Eng	137				Furnished	278XGFJP-*3 (8)	300	Eng	137				Furnished
278XMFJP-*3 (9)	265	Eng	170				Furnished	278XMFJP-*3 (9)	265	Eng	170				Furnished
278XSFJP-*3 (5)	250	Eng	210				Furnished	278XSFJP-*3 (5)	250	Eng	210				Furnished
859XGFJP-*5 (10)	575	Eng	108				Furnished	859XGFJP-*5 (10)	575	Eng	108				Furnished
859XJFJP-*5 (13)	525	Eng	123				Furnished	859XJFJP-*5 (13)	525	Eng	123				Furnished
859XMFJP-*5 (11)	490	Eng	139				Furnished	859XMFJP-*5 (11)	490	Eng	139				Furnished
								859XRFJP-*5 (12)	410	Eng	167				Furnished
								859XSFJP-*5 (14)	375	Eng	183				Furnished

CAUTION: The Torque Rating on Certain Ratios is Restricted by Allison Transmission to a Torque Limit of 685 Ft.lbs on their P.T.O. Drive Gear.

NOTE: The right side opening is located at approximately 1 o'clock when veiwed from the rear. All P.T.O.s mounted in this location require pressure lubrication.

NOTE: Do not use Adapter Gear Assemblies on any Allison Automatic Transmissions.

NOTE: All models require a hose assembly. For the 267 Series, use 329130-1X for the left side and 329130-6X for the right side. For the 269, 277, 278 and 859 Series, use 329130-4X for the left side and 329075-2X for the right side. THESE HOSE ASSEMBLIES MUST BE ORDERED SEPARATELY.

NOTE: 269 Series is available with a Wet Spline "XY" Output Only.

NOTE: 267 & 269 Series are constantly engaged and will always run when engine is running.

NOTE: The 267 Series is not available in the 3 arrangement with an "XK" output due to interference with the pressure lube fitting.

(1) Input Gear Part No. 5-P-1350
(2) Input Gear Part No. 5-P-1293
(3) Input Gear Part No. 5-P-1225
(4) Input Gear Part No. 5-P-1351
(5) Input Gear Part No. 5-P-1173
(6) Input Gear Part No. 5-P-912
(7) Input Gear Part No. 5-P-913
(8) Input Gear Part No. 5-P-914
(9) Input Gear Part No. 5-P-915
(10) Input Gear Part No. 5-P-1160
(11) Input Gear Part No. 5-P-1161
(12) Input Gear Part No. 5-P-1162
(13) Input Gear Part No. 5-P-1394
(14) Input Gear Part No. 5-P-1392

January 2008

Parker Hannifin Corporation
Chelsea Products Division
Olive Branch, MS 38654 USA

1000	2100 EVS	2200 RDS	2500 RDS
1000 EVS	2100 MH	2300 RDS	B 210
1000 MH	2100 RDS	2400	B 220
1000 RDS	2200 EVS	2500 EVS	
2000	2200 MH	2500 MH	

LEFT SIDE ONLY

TRANSMISSION GEAR DATA:
L.H. 6-Bolt Opening Gear FORWARD of Centerline
64 Teeth - SPUR

PITCH LINE TO APERTURE FACE:
1.0080" (25.6000MM)

RIGHT SIDE ONLY

TRANSMISSION GEAR DATA:
R.H. 6-Bolt Opening Gear FORWARD of Centerline
64 Teeth - SPUR

PITCH LINE TO APERTURE FACE:
1.0080" (25.6032MM)

Caution: Application Approval Required for P.T.O. Output Shaft Speeds Above 2500 R.P.M.

LEFT Side P.T.O. Model	Inter. Torq.	Dir. Rot.	Engine % Hi	Engine % Rev	Filler Block	Adapter Assy.	Stud Kit	RIGHT Side P.T.O. Model	Inter. Torq.	Dir. Rot.	Engine % Hi	Engine % Rev	Filler Block	Adapter Assy.	Stud Kit
ONE SPEED - TWO GEAR - MECHANICAL SHIFT															
442GBHVP-*5 (1)	215	Eng	96				Furnished	442GBHVP-*3 (1)	215	Eng	96				Furnished
442GBHVX-*5 (1)	150	Eng	96				Furnished	442GBHVX-*3 (1)	150	Eng	96				Furnished
442GFHVP-*5 (2)	165	Eng	151				Furnished	442GFHVP-*3 (2)	165	Eng	151				Furnished
ONE SPEED - TWO GEAR - POWERSHIFT (HYDRAULIC)															
250GDHVX-*5 (3)	120	Eng	122				Furnished	250GDHVX-*5 (3)	120	Eng	122				Furnished
250GMHVX-*5 (4)	50	Eng	178				Furnished	250GMHVX-*5 (4)	50	Eng	178				Furnished
270GAHVP-*5 (5)	310	Eng	81				Furnished	270GAHVP-*3 (5)	310	Eng	81				Furnished
270GBHVP-*5 (6)	239	Eng	105				Furnished	270GBHVP-*3 (6)	239	Eng	105				Furnished
270GDHVP-*5 (7)	206	Eng	121				Furnished	270GDHVP-*3 (7)	206	Eng	121				Furnished
270GKHVP-*5 (8)	152	Eng	163				Furnished	270GKHVP-*3 (8)	152	Eng	163				Furnished
271GAHVP-*3 (5)	250	Eng	81				Furnished	271GAHVP-*5 (5)	250	Eng	81				Furnished
271GBHVP-*3 (6)	239	Eng	105				Furnished	271GBHVP-*5 (6)	239	Eng	105				Furnished
271GDHVP-*3 (7)	206	Eng	121				Furnished	271GDHVP-*5 (7)	206	Eng	121				Furnished
271GKHVP-*3 (8)	152	Eng	163				Furnished	271GKHVP-*5 (8)	152	Eng	163				Furnished
ONE SPEED - TWO GEAR - POWERSHIFT (AIR)															
230GAHVP-*5 (5)	310	Eng	81				Furnished	230GAHVP-*3 (5)	310	Eng	81				Furnished
230GBHVP-*5 (6)	239	Eng	105				Furnished	230GBHVP-*3 (6)	239	Eng	105				Furnished
230GDHVP-*5 (7)	206	Eng	121				Furnished	230GDHVP-*3 (7)	206	Eng	121				Furnished
231GAHVP-*3 (5)	250	Eng	81				Furnished	231GAHVP-*5 (5)	250	Eng	81				Furnished
231GBHVP-*3 (6)	239	Eng	105				Furnished	231GBHVP-*5 (6)	239	Eng	105				Furnished
231GDHVP-*3 (7)	206	Eng	121				Furnished	231GDHVP-*5 (7)	206	Eng	121				Furnished
GEARED ADAPTERS															
645GHVX-4HV (2)		Eng			7-A-140(P)(9)		Furnished	645GHVX-3HV (2)		Eng			7-A-140(P)(9)		Furnished

CAUTION: If installing a P.T.O. with the EOC, speed sensor 379917 must be used. Standard speed sensor, part number 379243, may cause incorrect speed readings to the EOC control box.

CAUTION: The P.T.O. torque ratings shown are based on the maximum allowable torque of 250lb/ft at the 64 tooth gear in the transmission with the P.T.O. on one opening only. With P.T.O.s mounted on both openings the maximum allowable torque at the 64 tooth gear in the transmission is 200 lb/ft. The 270/271/230/231 Series torque ratings will be as follows, "A" ratio = 247 lb/ft., "B" ratio = 190 lb/ft., "D" ratio = 165 lbs/ft. With the 442 Series on both sides, P.T.O. torque ratings will be as follows, "B*P" ratio = 208 lb/ft., "F" ratio = 135 lb/ft. For a more precise evalution of your P.T.O. application refer to the Allison Body Builders Book, Section F, P.T.O. Systems Provisions.

NOTE: There is torque converter lock up feature available with the 1000/2000/2400 series transmissions. The torque converter lock up feature comes on and is controlled by the Transmission Control Module (TCM) when a signal is provided to the "P.T.O. Enable" circuit of the TCM by the P.T.O. switch. Lock up will only come on in the "NETURAL" and "PARK" positions at 1100 RPM transmission turbine speed. This equates to 1200-1250 RPM or higher engine speed, depending on P.T.O. load. The lock up clutch does not come on automatically in "DRIVE" at 1100 RPM. Refer to the appropriate owner's manual for wiring installation.

NOTE: To connect the P.T.O. switch to the "P.T.O. Enable" circuit of the TCM, a wiring kit must be ordered depending on the type of shifter being used. For Shifter without EOC order 329336-1X, for Shifter with EOC order 329336-2X and for Shifter with Pilot Valve order 329336-3X. These kits will include wire and installation instructions.

NOTE: Wiring harness 379924 must be used in the MY2003 and after GM "C" series trucks for the 270/271 and 230/231 Series P.T.O.s and wiring harness 379925 must be used for the 250 Series P.T.O. if the GM provided in-dash switch is used and torque converter lock-up is required for the application. ORDER SEPARATELY

NOTE: For 270/271 Series order P.T.O. Hose Installation Kit 329365X to complete P.T.O shifter installation.

NOTE: The 645 geared adapter listed on this application page is for the 442*F Ratio Only. A 442ZFHV with 7-A-140 filler block and 7170-1X stud kit must be used when mounting the P.T.O. to the 645 adapter.

NOTE: If the 442 Series is ordered with Pressure Lube, Hose 328075X is supplied with the P.T.O. A Restrictor Orifice, 379896 (442*FHVP) or 379594 (442*BHVP) is required and is shipped with the P.T.O.

NOTE: Output Shaft Rotation is "Engine" (Eng) Only for 442*B Ratio, DO NOT USE with Geared Adapter.

NOTE: A lube "T" fitting is required in the oil return cooling line to supply low pressure oil to the idler shaft of the 230, 231, 270, 271, or 442 Series P.T.O. The 378840 "T" fitting is for transmission model 1000 with the SAE #3 bell housing, 378970 "T" fitting is for the transmission model 1000/2000/2400 with the SAE #2 bell housing, or the low pressure return line may be cut with a tube cutter and then a compression "T" fitting may be installed. The high pressure port requires a 7/16-20 O-ring boss fitting.

(1) Input Gear Part No. 5-P-1358
(2) Input Gear Part No. 5-P-1300
(3) Input Gear Part No. 5-P-1294
(4) Input Gear Part No. 5-P-1386
(5) Input Gear Part No. 5-P-1295
(6) Input Gear Part No. 5-P-1296
(7) Input Gear Part No. 5-P-1297
(8) Input Gear Part No. 5-P-1417
(9) Filler block furnished with P.T.O.

January 2008

Parker Hannifin Corporation
Chelsea Products Division
Olive Branch, MS 38654 USA

MD-3066P

LEFT SIDE ONLY

TRANSMISSION GEAR DATA:
L.H. 10-Bolt Opening Gear FORWARD of Centerline
83 Teeth - L.H. HELIX
PITCH LINE TO APERTURE FACE:
1.7800" (45.2100MM)

RIGHT SIDE ONLY

TRANSMISSION GEAR DATA:
R.H. 10-Bolt Opening Gear FORWARD of Centerline
83 Teeth - L.H. HELIX
PITCH LINE TO APERTURE FACE:
1.7800" (45.2100MM)

Caution: Application Approval Required for P.T.O. Output Shaft Speeds Above 2500 R.P.M.

ONE SPEED - TWO GEAR - CONSTANT MESH

LEFT Side P.T.O. Model	Inter. Torq.	Dir. Rot.	Engine % Hi	Engine % Rev	Filler Block	Adapter Assy.	Stud Kit	RIGHT Side P.T.O. Model	Inter. Torq.	Dir. Rot.	Engine % Hi	Engine % Rev	Filler Block	Adapter Assy.	Stud Kit
267SBFJP-*5 (1)	402	Eng	88				Furnished	267SBFJP-*3 (1)	402	Eng	88				Furnished
267SDFJP-*5 (2)	390	Eng	106				Furnished	267SDFJP-*3 (2)	390	Eng	106				Furnished
267SGFJP-*5 (3)	360	Eng	126				Furnished	267SGFJP-*3 (3)	360	Eng	126				Furnished
267SMFJP-*5 (4)	309	Eng	157				Furnished	267SMFJP-*3 (4)	309	Eng	157				Furnished
267SSFJP-*5 (5)	247	Eng	196				Furnished	267SSFJP-*3 (5)	247	Eng	196				Furnished
267XBFJP-*5 (6)	335	Eng	88				Furnished	267XBFJP-*3 (6)	335	Eng	88				Furnished
267XDFJP-*5 (7)	325	Eng	106				Furnished	267XDFJP-*3 (7)	325	Eng	106				Furnished
267XGFJP-*5 (8)	300	Eng	126				Furnished	267XGFJP-*3 (8)	300	Eng	126				Furnished
267XMFJP-*5 (9)	265	Eng	157				Furnished	267XMFJP-*3 (9)	265	Eng	157				Furnished
267XSFJP-*5 (5)	247	Eng	196				Furnished	267XSFJP-*3 (5)	247	Eng	196				Furnished
269SGFJW-*3 (3)	360	Eng	117				Furnished	269SGFJW-*3 (3)	360	Eng	117				Furnished
269XGFJW-*3 (8)	300	Eng	117				Furnished	269XGFJW-*3 (8)	300	Eng	117				Furnished
867XGFJP-*5 (10)	522	Eng	93				Furnished	867XGFJP-*5 (10)	522	Eng	93				Furnished
867XMFJP-*5 (11)	408	Eng	119				Furnished	867XMFJP-*5 (11)	408	Eng	119				Furnished
867XRFJP-*5 (12)	342	Eng	142				Furnished	867XRFJP-*5 (12)	342	Eng	142				Furnished
867XTFJP-*5 (13)	284	Eng	171				Furnished	867XTFJP-*5 (13)	284	Eng	171				Furnished

ONE SPEED - TWO GEAR - POWERSHIFT (HYDRAULIC)

277SBFJP-*5 (1)	402	Eng	88				Furnished	277SBFJP-*5 (1)	402	Eng	88				Furnished
277SDFJP-*5 (2)	390	Eng	106				Furnished	277SDFJP-*5 (2)	390	Eng	106				Furnished
277SGFJP-*5 (3)	360	Eng	126				Furnished	277SGFJP-*5 (3)	360	Eng	126				Furnished
277SMFJP-*5 (4)	309	Eng	157				Furnished	277SMFJP-*5 (4)	309	Eng	157				Furnished
277SSFJP-*5 (5)	247	Eng	196				Furnished	277SSFJP-*5 (5)	247	Eng	196				Furnished
277XBFJP-*5 (6)	335	Eng	88				Furnished	277XBFJP-*5 (6)	335	Eng	88				Furnished
277XDFJP-*5 (7)	325	Eng	106				Furnished	277XDFJP-*5 (7)	325	Eng	106				Furnished
277XGFJP-*5 (8)	300	Eng	126				Furnished	277XGFJP-*5 (8)	300	Eng	126				Furnished
277XMFJP-*5 (9)	265	Eng	157				Furnished	277XMFJP-*5 (9)	265	Eng	157				Furnished
277XSFJP-*5 (5)	247	Eng	196				Furnished	277XSFJP-*5 (5)	247	Eng	196				Furnished
278SBFJP-*3 (1)	402	Eng	83				Furnished	278SBFJP-*3 (1)	402	Eng	83				Furnished
278SDFJP-*3 (2)	390	Eng	99				Furnished	278SDFJP-*3 (2)	390	Eng	99				Furnished

Continued Next Page

CAUTION: The Torque Rating on Certain Ratios is Restricted by Allison Transmission to a Torque Limit of 485 Ft.lbs on their P.T.O. Drive Gear.

NOTE: The Allison Model MD-3066 has two 10 bolt aperature openings located at 9 o'clock on the left side and 2 o'clock on the right side (Top Right). Every P.T.O. mounted on this transmission must have the pressure lube option ("P").

NOTE: All models require a hose assembly. For the 267 Series, use 329130-1X for the left side and 329130-6X for the right side. For the 269, 277, 278 and 859 Series, use 329130-4X for the left side and 329075-2X for the right side. THESE HOSE ASSEMBLIES MUST BE ORDERED SEPARATELY.

NOTE: The 269 Series is available with a Wet Spline "XY" Output Only.

NOTE: 267 Series are constantly engaged and will always run when engine is running.

NOTE: The 267 Series is not available in the 3 arrangement with an "XK" output due to interference with the pressure lube fitting.

NOTE: Do not use Adapter Gear Assemblies on any Allison Automatic Transmissions.

(1) Input Gear Part No. 5-P-1350
(2) Input Gear Part No. 5-P-1293
(3) Input Gear Part No. 5-P-1225
(4) Input Gear Part No. 5-P-1351
(5) Input Gear Part No. 5-P-1173
(6) Input Gear Part No. 5-P-912
(7) Input Gear Part No. 5-P-913
(8) Input Gear Part No. 5-P-914
(9) Input Gear Part No. 5-P-915
(10) Input Gear Part No. 5-P-1160
(11) Input Gear Part No. 5-P-1161
(12) Input Gear Part No. 5-P-1162
(13) Input Gear Part No. 5-P-1212

MD-3066P

LEFT SIDE ONLY	RIGHT SIDE ONLY
TRANSMISSION GEAR DATA: L.H. 10-Bolt Opening Gear FORWARD of Centerline 83 Teeth - L.H. HELIX **PITCH LINE TO APERTURE FACE:** 1.7800" (45.2100MM)	**TRANSMISSION GEAR DATA:** R.H. 10-Bolt Opening Gear FORWARD of Centerline 83 Teeth - L.H. HELIX **PITCH LINE TO APERTURE FACE:** 1.7800" (45.2100MM)

Caution: Application Approval Required for P.T.O. Output Shaft Speeds Above 2500 R.P.M.

ONE SPEED - TWO GEAR - POWERSHIFT (HYDRAULIC)

LEFT Side P.T.O. Model	Inter. Torq.	Dir. Rot.	Engine % Hi	Engine % Rev	Filler Block	Adapter Assy.	Stud Kit	RIGHT Side P.T.O. Model	Inter. Torq.	Dir. Rot.	Engine % Hi	Engine % Rev	Filler Block	Adapter Assy.	Stud Kit
278SGFJP-*3 (3)	360	Eng	117				Furnished	278SGFJP-*3 (3)	360	Eng	117				Furnished
278SMFJP-*3 (4)	318	Eng	145				Furnished	278SMFJP-*3 (4)	318	Eng	145				Furnished
278SSFJP-*3 (5)	265	Eng	180				Furnished	278SSFJP-*3 (5)	265	Eng	180				Furnished
278STFJP-*3 (14)	230	Eng	211				Furnished	278STFJP-*3 (14)	230	Eng	211				Furnished
278XBFJP-*3 (6)	335	Eng	83				Furnished	278XBFJP-*3 (6)	335	Eng	83				Furnished
278XDFJP-*3 (7)	325	Eng	99				Furnished	278XDFJP-*3 (7)	325	Eng	99				Furnished
278XGFJP-*3 (8)	300	Eng	117				Furnished	278XGFJP-*3 (8)	300	Eng	117				Furnished
278XTFJP-*3 (15)	225	Eng	211				Furnished	278XTFJP-*3 (15)	225	Eng	211				Furnished
859XGFJP-*5 (10)	522	Eng	93				Furnished	859XGFJP-*5 (10)	522	Eng	93				Furnished
859XJFJP-*5 (16)	462	Eng	105				Furnished	859XJFJP-*5 (16)	462	Eng	105				Furnished
859XMFJP-*5 (11)	408	Eng	119				Furnished	859XMFJP-*5 (11)	408	Eng	119				Furnished
859XRFJP-*5 (12)	339	Eng	143				Furnished	859XRFJP-*5 (12)	339	Eng	143				Furnished
859XSFJP-*5 (17)	311	Eng	156				Furnished	859XSFJP-*5 (17)	311	Eng	156				Furnished
859XTFJP-*5 (13)	284	Eng	171				Furnished	859XTFJP-*5 (13)	284	Eng	171				Furnished
859XWFJP-*5 (18)	233	Eng	208				Furnished	859XWFJP-*5 (18)	233	Eng	208				Furnished

CAUTION: The Torque Rating on Certain Ratios is Restricted by Allison Transmission to a Torque Limit of 485 Ft.lbs on their P.T.O. Drive Gear.

NOTE: The Allison Model MD-3066 has two 10 bolt aperature openings located at 9 o'clock on the left side and 2 o'clock on the right side (Top Right). Every P.T.O. mounted on this transmission must have the pressure lube option ("P").

NOTE: All models require a hose assembly. For the 267 Series, use 329130-1X for the left side and 329130-6X for the right side. For the 269, 277, 278 and 859 Series, use 329130-4X for the left side and 329075-2X for the right side. THESE HOSE ASSEMBLIES MUST BE ORDERED SEPARATELY.

NOTE: The 269 Series is available with a Wet Spline "XY" Output Only.

NOTE: 267 Series are constantly engaged and will always run when engine is running.

NOTE: The 267 Series is not available in the 3 arrangement with an "XK" output due to interference with the pressure lube fitting.

NOTE: Do not use Adapter Gear Assemblies on any Allison Automatic Transmissions.

(3) Input Gear Part No. 5-P-1225
(4) Input Gear Part No. 5-P-1351
(5) Input Gear Part No. 5-P-1173
(6) Input Gear Part No. 5-P-912
(7) Input Gear Part No. 5-P-913
(8) Input Gear Part No. 5-P-914
(10) Input Gear Part No. 5-P-1160
(11) Input Gear Part No. 5-P-1161
(12) Input Gear Part No. 5-P-1162
(13) Input Gear Part No. 5-P-1212
(14) Input Gear Part No. 5-P-1410
(15) Input Gear Part No. 5-P-1409
(16) Input Gear Part No. 5-P-1394
(17) Input Gear Part No. 5-P-1392
(18) Input Gear Part No. 5-P-1309

January 2008

Parker Hannifin Corporation
Chelsea Products Division
Olive Branch, MS 38654 USA

3000 EVS

3500 EVS

LEFT SIDE ONLY

TRANSMISSION GEAR DATA:

L.H. 10-Bolt Opening Gear FORWARD of Centerline

83 Teeth - L.H. HELIX

PITCH LINE TO APERTURE FACE:

1.7800" (45.2100MM)

TOP SIDE ONLY

TRANSMISSION GEAR DATA:

TOP 10-Bolt Opening Gear FORWARD of Centerline

83 Teeth - L.H. HELIX

PITCH LINE TO APERTURE FACE:

1.7800" (45.2100MM)

Caution: Application Approval Required for P.T.O. Output Shaft Speeds Above 2500 R.P.M.

LEFT Side P.T.O. Model	Inter. Torq.	Dir. Rot.	Engine % Hi	Engine % Rev	Filler Block	Adapter Assy.	Stud Kit	TOP Side P.T.O. Model	Inter. Torq.	Dir. Rot.	Engine % Hi	Engine % Rev	Filler Block	Adapter Assy.	Stud Kit
ONE SPEED - TWO GEAR - CONSTANT MESH															
267SBFJP-*5 (1)	402	Eng	88				Furnished	267SBFJP-*3 (1)	402	Eng	88				Furnished
267SDFJP-*5 (2)	390	Eng	106				Furnished	267SDFJP-*3 (2)	390	Eng	106				Furnished
267SGFJP-*5 (3)	360	Eng	126				Furnished	267SGFJP-*3 (3)	360	Eng	126				Furnished
267SMFJP-*5 (4)	309	Eng	157				Furnished	267SMFJP-*3 (4)	309	Eng	157				Furnished
267SSFJP-*5 (5)	247	Eng	196				Furnished	267SSFJP-*3 (5)	247	Eng	196				Furnished
267XBFJP-*5 (6)	335	Eng	88				Furnished	267XBFJP-*3 (6)	335	Eng	88				Furnished
267XDFJP-*5 (7)	325	Eng	106				Furnished	267XDFJP-*3 (7)	325	Eng	106				Furnished
267XGFJP-*5 (8)	300	Eng	126				Furnished	267XGFJP-*3 (8)	300	Eng	126				Furnished
267XMFJP-*5 (9)	265	Eng	157				Furnished	267XMFJP-*3 (9)	265	Eng	157				Furnished
267XSFJP-*5 (5)	247	Eng	196				Furnished	267XSFJP-*3 (5)	247	Eng	196				Furnished
269SGFJW-*3 (3)	360	Eng	117				Furnished	269SGFJW-*3 (3)	360	Eng	117				Furnished
269XGFJW-*3 (8)	300	Eng	117				Furnished	269XGFJW-*3 (8)	300	Eng	117				Furnished
867XGFJP-*5 (10)	575	Eng	93				Furnished	867XGFJP-*5 (10)	575	Eng	93				Furnished
867XMFJP-*5 (11)	490	Eng	119				Furnished	867XMFJP-*5 (11)	490	Eng	119				Furnished
867XRFJP-*5 (12)	415	Eng	142				Furnished	867XRFJP-*5 (12)	415	Eng	142				Furnished
867XTFJP-*5 (13)	350	Eng	171				Furnished	867XTFJP-*5 (13)	350	Eng	171				Furnished
ONE SPEED - TWO GEAR - POWERSHIFT (HYDRAULIC)															
277SBFJP-*5 (1)	402	Eng	88				Furnished	277SBFJP-*5 (1)	402	Eng	88				Furnished
277SDFJP-*5 (2)	390	Eng	106				Furnished	277SDFJP-*5 (2)	390	Eng	106				Furnished
277SGFJP-*5 (3)	360	Eng	126				Furnished	277SGFJP-*5 (3)	360	Eng	126				Furnished
277SMFJP-*5 (4)	309	Eng	157				Furnished	277SMFJP-*5 (4)	309	Eng	157				Furnished
277SSFJP-*5 (5)	247	Eng	196				Furnished	277SSFJP-*5 (5)	247	Eng	196				Furnished
277XBFJP-*5 (6)	335	Eng	88				Furnished	277XBFJP-*5 (6)	335	Eng	88				Furnished
277XDFJP-*5 (7)	325	Eng	106				Furnished	277XDFJP-*5 (7)	325	Eng	106				Furnished
277XGFJP-*5 (8)	300	Eng	126				Furnished	277XGFJP-*5 (8)	300	Eng	126				Furnished
277XMFJP-*5 (9)	265	Eng	157				Furnished	277XMFJP-*5 (9)	265	Eng	157				Furnished
277XSFJP-*5 (5)	247	Eng	196				Furnished	277XSFJP-*5 (5)	247	Eng	196				Furnished
278SBFJP-*3 (1)	402	Eng	83				Furnished	278SBFJP-*3 (1)	402	Eng	83				Furnished
278SDFJP-*3 (2)	390	Eng	99				Furnished	278SDFJP-*3 (2)	390	Eng	99				Furnished

Continued Next Page

NOTE: Allison Transmission Maximum Power Capability of the Top Mount P.T.O. Drive Gear on MD Series Transmissions used in the Fire and Emergency Vehicle Vocations has been Increased. The ratings on this page are valid only for the Top Mount P.T.O. Option. Refer to Allison Watch #291 for complete details.

NOTE: The Stated Intermittent Torque Values on this Page are for Fire and Emergency Vehicle Applications with One P.T.O. not to Exceed 790 Lbs.ft [1068 N.m] on the Transmission P.T.O. Drive Gear. For Two P.T.O. Applications the Combined Torque Valve Can Not Exceed 790 Lbs.ft [1068 N.m] at the Transmission P.T.O. Drive Gear. See Example on "How to Calculate".

NOTE: "How to Calculate" Torque for two (2) P.T.O. INTERMITTENT Applications. Combined Total = [Actual Torque of P.T.O.#1] / [Per Cent of Engine] + [Actual Torque of P.T.O.#2] / [Per Cent of Engine]. Application is OK if Combined Torque is less than 790 Lbs.ft for Intermitten use and the P.T.O.s Torque Requirements are less than Stated P.T.O. Torque Limits. For CONTINUOUS Applications = Application is OK if Combined Torque is less than 685 Lbs.ft and the P.T.O.s Torque Requirements are less than Stated P.T.O. Torque Limits x .70.

NOTE: All models require a hose assembly. For the 267 Series, use 329130-1X for the left side and 329130-6X for the right side. For the 269, 277, 278 and 859 Series, use 329130-4X for the left side and 329075-2X for the right side. THESE HOSE ASSEMBLIES MUST BE ORDERED SEPARATELY

NOTE: The 269 Series is available with a Wet Spline "XY" Output Only.

NOTE: The 267 Series is not available in the 3 arrangement with an "XK" output due to interference with the pressure lube fitting.

(1) Input Gear Part No. 5-P-1350
(2) Input Gear Part No. 5-P-1293
(3) Input Gear Part No. 5-P-1225
(4) Input Gear Part No. 5-P-1351
(5) Input Gear Part No. 5-P-1173
(6) Input Gear Part No. 5-P-912
(7) Input Gear Part No. 5-P-913
(8) Input Gear Part No. 5-P-914
(9) Input Gear Part No. 5-P-915
(10) Input Gear Part No. 5-P-1160
(11) Input Gear Part No. 5-P-1161
(12) Input Gear Part No. 5-P-1162
(13) Input Gear Part No. 5-P-1212

January 2008

Parker Hannifin Corporation
Chelsea Products Division
Olive Branch, MS 38654 USA

3000 EVS

3500 EVS

LEFT SIDE ONLY

TRANSMISSION GEAR DATA:

L.H. 10-Bolt Opening Gear FORWARD of Centerline

83 Teeth - L.H. HELIX

PITCH LINE TO APERTURE FACE:

1.7800" (45.2100MM)

TOP SIDE ONLY

TRANSMISSION GEAR DATA:

TOP 10-Bolt Opening Gear FORWARD of Centerline

83 Teeth - L.H. HELIX

PITCH LINE TO APERTURE FACE:

1.7800" (45.2100MM)

Caution: Application Approval Required for P.T.O. Output Shaft Speeds Above 2500 R.P.M.

ONE SPEED - TWO GEAR - POWERSHIFT (HYDRAULIC)

LEFT Side P.T.O. Model	Inter. Torq.	Dir. Rot.	Engine % Hi	Engine % Rev	Filler Block	Adapter Assy.	Stud Kit	TOP Side P.T.O. Model	Inter. Torq.	Dir. Rot.	Engine % Hi	Engine % Rev	Filler Block	Adapter Assy.	Stud Kit
278SGFJP-*3 (3)	360	Eng	117				Furnished	278SGFJP-*3 (3)	360	Eng	117				Furnished
278SMFJP-*3 (4)	318	Eng	145				Furnished	278SMFJP-*3 (4)	318	Eng	145				Furnished
278SSFJP-*3 (5)	265	Eng	180				Furnished	278SSFJP-*3 (5)	265	Eng	180				Furnished
278STFJP-*3 (14)	230	Eng	211				Furnished	278STFJP-*3 (14)	230	Eng	211				Furnished
278XBFJP-*3 (6)	335	Eng	83				Furnished	278XBFJP-*3 (6)	335	Eng	83				Furnished
278XDFJP-*3 (7)	325	Eng	99				Furnished	278XDFJP-*3 (7)	325	Eng	99				Furnished
278XGFJP-*3 (8)	300	Eng	117				Furnished	278XGFJP-*3 (8)	300	Eng	117				Furnished
278XTFJP-*3 (15)	225	Eng	211				Furnished	278XTFJP-*3 (15)	225	Eng	211				Furnished
859XGFJP-*5 (10)	575	Eng	93				Furnished	859XGFJP-*5 (10)	575	Eng	93				Furnished
859XJFJP-*5 (16)	525	Eng	105				Furnished	859XJFJP-*5 (16)	525	Eng	105				Furnished
859XMFJP-*5 (11)	490	Eng	119				Furnished	859XMFJP-*5 (11)	490	Eng	119				Furnished
859XRFJP-*5 (12)	415	Eng	143				Furnished	859XRFJP-*5 (12)	415	Eng	143				Furnished
859XSFJP-*5 (17)	385	Eng	156				Furnished	859XSFJP-*5 (17)	385	Eng	156				Furnished
859XTFJP-*5 (13)	350	Eng	171				Furnished	859XTFJP-*5 (13)	350	Eng	171				Furnished
859XWFJP-*5 (18)	285	Eng	208				Furnished	859XWFJP-*5 (18)	285	Eng	208				Furnished

NOTE: Allison Transmission Maximum Power Capability of the Top Mount P.T.O. Drive Gear on MD Series Transmissions used in the Fire and Emergency Vehicle Vocations has been Increased. The ratings on this page are valid only for the Top Mount P.T.O. Option. Refer to Allison Watch #291 for complete details.

NOTE: The Stated Intermittent Torque Values on this Page are for Fire and Emergency Vehicle Applications with One P.T.O. not to Exceed 790 Lbs.ft [1068 N.m] on the Transmission P.T.O. Drive Gear. For Two P.T.O. Applications the Combined Torque Valve Can Not Exceed 790 Lbs.ft [1068 N.m] at the Transmission P.T.O. Drive Gear. See Example on "How to Calculate".

NOTE: "How to Calculate" Torque for two (2) P.T.O. INTERMITTENT Applications. Combined Total = [Actual Torque of P.T.O.#1] / [Per Cent of Engine] + [Actual Torque of P.T.O.#2] / [Per Cent of Engine]. Application is OK if Combined Torque is less than 790 Lbs.ft for Intermitten use and the P.T.O.s Torque Requirements are less than Stated P.T.O. Torque Limits. For CONTINUOUS Applications = Application is OK if Combined Torque is less than 685 Lbs.ft and the P.T.O.s Torque Requirements are less than Stated P.T.O. Torque Limits x .70.

NOTE: All models require a hose assembly. For the 267 Series, use 329130-1X for the left side and 329130-6X for the right side. For the 269, 277, 278 and 859 Series, use 329130-4X for the left side and 329075-2X for the right side. THESE HOSE ASSEMBLIES MUST BE ORDERED SEPARATELY

NOTE: The 269 Series is available with a Wet Spline "XY" Output Only.

NOTE: The 267 Series is not available in the 3 arrangement with an "XK" output due to interference with the pressure lube fitting.

(3) Input Gear Part No. 5-P-1225
(4) Input Gear Part No. 5-P-1351
(5) Input Gear Part No. 5-P-1173
(6) Input Gear Part No. 5-P-912
(7) Input Gear Part No. 5-P-913
(8) Input Gear Part No. 5-P-914
(10) Input Gear Part No. 5-P-1160
(11) Input Gear Part No. 5-P-1161
(12) Input Gear Part No. 5-P-1162
(13) Input Gear Part No. 5-P-1212
(14) Input Gear Part No. 5-P-1410
(15) Input Gear Part No. 5-P-1409
(16) Input Gear Part No. 5-P-1394
(17) Input Gear Part No. 5-P-1392
(18) Input Gear Part No. 5-P-1309

January 2008

Parker Hannifin Corporation
Chelsea Products Division
Olive Branch, MS 38654 USA

1000 (GM 3600 CAB-CHASSIS)

RIGHT SIDE ONLY

TRANSMISSION GEAR DATA:
R.H. 6-Bolt Opening Gear FORWARD of Centerline
64 Teeth - SPUR

PITCH LINE TO APERTURE FACE:
6.8648" (25.6032MM)

Caution: Application Approval Required for P.T.O. Output Shaft Speeds Above 2500 R.P.M.

P.T.O. Model	Inter. Torq.	Dir. Rot.	Engine % Hi	Engine % Rev	Filler Block	Adapter Assy.	Stud Kit	RIGHT Side P.T.O. Model	Inter. Torq.	Dir. Rot.	Engine % Hi	Engine % Rev	Filler Block	Adapter Assy.	Stud Kit
ONE SPEED - TWO GEAR - POWERSHIFT (HYDRAULIC)															
								250GDHVX-*5 (1)	120	Eng	122				Furnished
								250GMHVX-*5 (2)	50	Eng	178				Furnished

Pumps for 250 Series

Option Code Number	250 Series Pumps**	Cubic Inch Displace Diplacement	Gals/Min @ 1000 R.P.M.	Maximum Pressure (PSI)	Maximum Speed (R.P.M.)
508	CGP-P5C008-1AA	0.18	0.8	4400	4000
508	CGP-P5C008-1AA	0.18	0.8	4400	4000
510	CGP-P5C010-1AA	0.23	1	4400	4000
513	CGP-P5C013-1AA	0.31	1.3	4400	4000
519	CGP-P5C019-1AA	0.44	1.9	4400	3300
1116	CGP-P11C016-1AC	0.37	1.6	4400	4000
1121	CGP-P11C021-1AC	0.49	2.1	4400	4000
1126	CGP-P11C026-1AC	0.60	2.6	4400	3600
1129	CGP-P11C029-1AC	0.67	2.9	4400	3600
1137	CGP-P11C037-1AC	0.85	3.7	4400	3300
1449	CGP-P31C054-1AE	1.24	5.4	3500	3000
1462	CGP-P31C061-1AE	1.43	6.2	3500	3000

** All 250 Series Pumps MUST be Rear Ported

CAUTION: Failure to use the approved provided components may cause premature failure of the power take-off, the transmission and /or the pump/hydraulic system. For MY 2006 and Prior - Installation Kit# 329331X was required for installation of heat shields and plumbing for the pump. For MY 2007 and Later special heat shields and pump plumbing are not required.

NOTE: There is torque converter lock up feature available with the 1000 series transmission. The torque converter lock up feature comes on and is controlled by the Transmission Control Module (TCM) at 1100 RPM transmission turbine speed when a signal is provided to the "PTO Enable" circuit of the TCM by the P.T.O. switch. This equates to 1200-1250 RPM or higher engine speed, depending on P.T.O. load. Lock up will only come on in the "PARK" position. The lock up clutch does not come on automatically in "DRIVE" at 1100 RPM. Refer to the appropriate owner's manual for wiring installation.

NOTE: The P.T.O. torque ratings shown are based on the maximum allowable torque of 250 lb-ft at the 64 tooth gear in the transmission with the P.T.O. on one opening only. With P.T.O.s mounted on both openings the maximum allowable torque at the 64 tooth gear in the transmission is 200 lb-ft. For a more precise evalution of your P.T.O. application refer to the Allison Body Builders Book, Section F, P.T.O. Systems Provisions.

NOTE: The 250 Series on the MY 2007 and later GM 3600 Cab/Chassis requires a wiring harness Chelsea part number 379930. This harness must be ordered seperatly and is required for proper P.T.O. to Engine interface operation. Refer to GM UI Bulletin #80.

NOTE: Only the 12v "B" option shifter can be used on this application.

NOTE: The left P.T.O. aperture opening on this application is not usable due to engine fuel lines blocking the opening.

(1) Input Gear Part No. 5-P-1294
(2) Input Gear Part No. 5-P-1386

Notes

Parker Hannifin Corporation
Chelsea Products Division
Olive Branch, MS 38654 USA


CATERPILLAR

⚠ WARNING

FAILURE OR IMPROPER SELECTION OR IMPROPER USE OF THE PRODUCTS AND/OR SYSTEMS DESCRIBED HEREIN OR RELATED ITEMS CAN CAUSE DEATH, PERSONAL INJURY AND PROPERTY DAMAGE.

This document and other information from Parker Hannifin Corporation, its subsidiaries and authorized distributors provide product and/or system options for further investigation by users having technical expertise. It is important that you analyze all aspects of your application and review the information concerning the product or system in the current product catalog. Due to the variety of operating conditions and applications for these products or systems, the user, through its own analysis and testing, is solely responsible for making the final selection of the products and systems and assuring that all performance, safety and warning requirements of the application are met.

The products described herein, including without limitation, product features, specifications, designs, availability and pricing, are subject to change by Parker Hannifin Corporation and its subsidiaries at any time without notice.

Offer of Sale

The items described in this document are hereby offered for sale by Parker Hannifin Corporation, its subsidiaries or its authorized distributors. This offer and its acceptance are governed by the provisions stated in the "Offer of Sale".

© Copyright 2008, Parker Hannifin Corporation, All Rights Reserved

Parker Hannifin Corporation
Chelsea Products Division
Olive Branch, MS 38654 USA

Transmission Make and Model	P.T.O. Appl. Number	Number Forward Speeds	Teeth in P.T.O. Driver
CX28	CAT-2	6	L79-R79
CX31	CAT-1	6	L88-R88
CX35	CAT-3	8	L100-R100
TH48FT-E70 (OFF Highway Automatic)	CAT-4	5	B56-L57-R57
TH48FT-E80 (OFF Highway Automatic)	CAT-5	5	B51-L57-R57

IMPORTANT: See Safety Information in Section I of the Chelsea Applications catalog HY25-3000/US.

Transmission P.T.O. Driver & Aperatures (Viewed from Rear of Transmission)

L-Left Side R-Right Side B-Bottom Side T-Top Side

For transmission not listed, contact your authorized Chelsea Distributor.

January 2008

Parker Hannifin Corporation
Chelsea Products Division
Olive Branch, MS 38654 USA

Pressure Port Locations & Hose Chart (SK-414 Rev B)

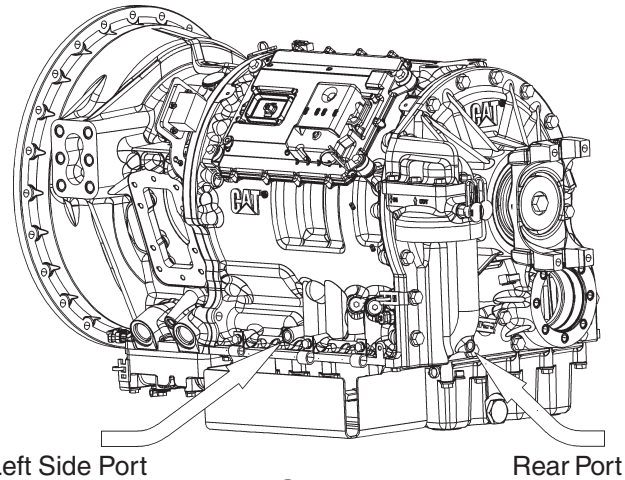

Left Side Port — Rear Port

CX31
(Filter Removed for Clarity)

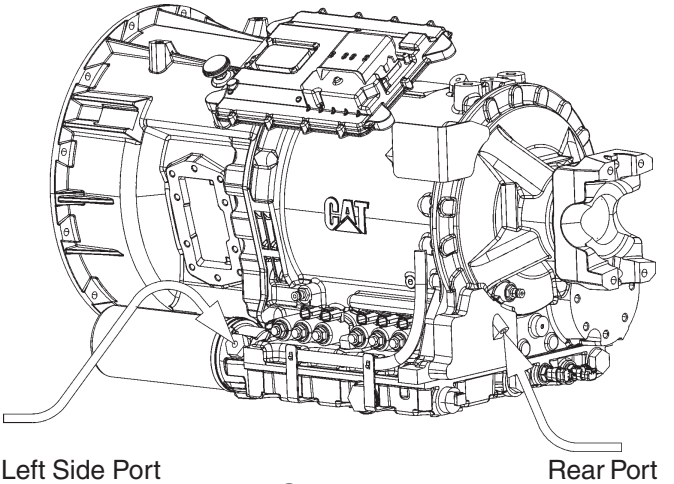

Left Side Port — Rear Port

CX28

Both High Pressure Connections are -4 O-Ring Boss

HOSE CHART

Trans.	P.T.O.	P.T.O. Location	High Oil Pressure Location	P.T.O. Valve Location	P.T.O. Fitting	Trans. Fitting	Trans.-P.T.O. Valve Hose #
CX31 CX28	277, 278 859	Driver (LHS)	LHS	Attached	379486	379812	329075-1X
		Driver (LHS)	Rear				329075-5X
		Pass. (RHS)	LHS				329075-2X
		Pass. (RHS)	Rear			379486	329075-5X
		Driver (LHS)	LHS	Remote	379486	379812	329130-6X
		Driver (LHS)	Rear				329130-6X
		Pass. (RHS)	LHS				329130-6X
		Pass. (RHS)	Rear				329130-6X
	267	Driver (LHS)	LHS	N/A	379486	379812	329130-3X
		Driver (LHS)	Rear			379486	329075-5X
		Pass. (RHS)	LHS			379812	329075-2X
		Pass. (RHS)	Rear			379812	329075-5X
	867	Driver (LHS)	LHS	N/A	379486	379812	329130-3X
		Driver (LHS)	Rear				329075-5X
		Pass. (RHS)	LHS				329075-2X
		Pass. (RHS)	Rear			379486	329075-5X

LHS = Left Side of Transmission, 8 o'clock position
RHS = Right Side of Transmission, 1 o'clock position

NOTES:

1. P.T.O. Fitting 379486 and Transmission Fitting 379812 included with the P.T.O. Unit. If Using 379486 in Transmission it Must be Purchased Separately.
2. Hoses to be Purchased Separately.
3. 379486 Elbow Will Not Install on the CX31 Left Hand (Driver) Side Oil Port Due to Transmission Interference. On CX28, 379486 Elbow will Fit on LHS Port.
4. If 379486 is Listed as Transmission Fitting for Rear Location for CX31. Route Hose Along Right Hand (passenger) Side of Transmission and Under Transmission Output Yoke. For the CX28, Route Hose Under the ECM.

CX31

LEFT SIDE ONLY	RIGHT SIDE ONLY
TRANSMISSION GEAR DATA: L.H. 10-Bolt Opening Gear FORWARD of Centerline 88 Teeth - R.H. HELIX **PITCH LINE TO APERTURE FACE:** 1.7207" (43.7060MM)	**TRANSMISSION GEAR DATA:** R.H. 10-Bolt Opening Gear FORWARD of Centerline 88 Teeth - R.H. HELIX **PITCH LINE TO APERTURE FACE:** 1.7207" (43.7060MM)

Caution: Application Approval Required for P.T.O. Output Shaft Speeds Above 2500 R.P.M.

LEFT Side P.T.O. Model	Inter. Torq.	Dir. Rot.	Engine % Hi	Engine % Rev	Filler Block	Adapter Assy.	Stud Kit	RIGHT Side P.T.O. Model	Inter. Torq.	Dir. Rot.	Engine % Hi	Engine % Rev	Filler Block	Adapter Assy.	Stud Kit
ONE SPEED - TWO GEAR - CONSTANT MESH															
267SBKVP-*5 (1)	402	Eng	104				Furnished	267SBKVP-*3 (1)	402	Eng	104				Furnished
267SDKVP-*5 (2)	390	Eng	124				Furnished	267SDKVP-*3 (2)	390	Eng	124				Furnished
267SGKVP-*5 (3)	360	Eng	148				Furnished	267SGKVP-*3 (3)	360	Eng	148				Furnished
267SMKVP-*5 (4)	318	Eng	185				Furnished	267SMKVP-*3 (4)	318	Eng	185				Furnished
267SSKVP-*5 (5)	265	Eng	231				Furnished	267SSKVP-*3 (5)	265	Eng	231				Furnished
267XBKVP-*5 (6)	335	Eng	104				Furnished	267XBKVP-*3 (6)	335	Eng	104				Furnished
267XCKVP-*5 (7)	330	Eng	111				Furnished	267XCKVP-*3 (7)	330	Eng	111				Furnished
267XDKVP-*5 (8)	325	Eng	124				Furnished	267XDKVP-*3 (8)	325	Eng	124				Furnished
267XGKVP-*5 (9)	300	Eng	148				Furnished	267XGKVP-*3 (9)	300	Eng	148				Furnished
267XMKVP-*5 (10)	265	Eng	185				Furnished	267XMKVP-*3 (10)	265	Eng	185				Furnished
267XSKVP-*5 (11)	250	Eng	231				Furnished	267XSKVP-*3 (11)	250	Eng	231				Furnished
269SBKVP-*3 (1)	402	Eng	98				Furnished	269SBKVP-*3 (1)	402	Eng	98				Furnished
269SDKVP-*3 (2)	390	Eng	117				Furnished	269SDKVP-*3 (2)	390	Eng	117				Furnished
269SGKVP-*3 (3)	360	Eng	138				Furnished	269SGKVP-*3 (3)	360	Eng	138				Furnished
269SMKVP-*3 (4)	318	Eng	171				Furnished	269SMKVP-*3 (4)	318	Eng	171				Furnished
269XBKVP-*3 (6)	335	Eng	98				Furnished	269XBKVP-*3 (6)	335	Eng	98				Furnished
269XDKVP-*3 (8)	325	Eng	117				Furnished	269XDKVP-*3 (8)	325	Eng	117				Furnished
269XGKVP-*3 (9)	300	Eng	138				Furnished	269XGKVP-*3 (9)	300	Eng	138				Furnished
269XMKVP-*3 (10)	265	Eng	171				Furnished	269XMKVP-*3 (10)	265	Eng	171				Furnished
867XGKVP-*5 (12)	575	Eng	109				Furnished	867XGKVP-*5 (12)	575	Eng	109				Furnished
867XMKVP-*5 (13)	490	Eng	140				Furnished	867XMKVP-*5 (13)	490	Eng	140				Furnished
867XRKVP-*5 (14)	415	Eng	168				Furnished	867XRKVP-*5 (14)	415	Eng	168				Furnished
867XTKVP-*5 (15)	350	Eng	201				Furnished	867XTKVP-*5 (15)	350	Eng	201				Furnished
ONE SPEED - TWO GEAR - POWERSHIFT (HYDRAULIC)															
277SBKVP-*5 (1)	402	Eng	104				Furnished	277SBKVP-*5 (1)	402	Eng	104				Furnished
277SDKVP-*5 (2)	390	Eng	124				Furnished	277SDKVP-*5 (2)	390	Eng	124				Furnished

Continued Next Page

NOTE: See Front Section of Caterpillar Index for Pressure Hose Chart Requirements (SK-414) for Side Mount Applications. Rear Mounts come with the Hose Supplied.

NOTE: P.T.O. Units Require a Pressure Regulating Solenoid and are Shipped with Units Ordered for this Transmission ("KV" input gear).

NOTE: The Internal Drive Shaft for the Rear Mount Opening is Optional from Caterpillar and Must be Specified when the Transmission is Ordered.

NOTE: The Transmission Filter may Interfere with Large Pumps Mounted to P.T.O.s at the 8 o'clock (Left Side) Position. A Remote Mount Filter Kit can be ordered from Caterpillar if this Option is Required. Large Pumps will also Require the Use of the Rear Pressure Port for Oil Supply Requirements. (See Front Section for Location and Hose Requirements, SK-414)

NOTE: The 267 Series in the "5" Arrangement May Have Possible Interference Between the Lube Fitting and Converter Housing. Make Sure the Fitting is Screwed Completely In before you Torque Down the P.T.O. Verify that the Fitting is not Contacting the Transmission Housing. A "3" Arrangement with SAE "B" Output Must Either be "XQ" or "AK" Can be Used. The "XK" Output can Not be Used Due to Interference Between Flange and Pressure Lube Fitting.

NOTE: Harness to use for GM trucks is Chelsea part number 379927 if dash mounted P.T.O. switch is to be used

*** NOTE**: The "XV" Output for the CAT-D Rear Mount is Rated at Both 800 Lbs.ft Intermittent and 800 Lbs.ft Continuous. This Output is not Derated for Continuous Operation.

**** NOTE**: The CAT-H Rear Mount is Rated at 335 Lbs.ft for Both Intermittent and Continuous Applications(All Output Options) .

(1) Input Gear Part No. 5-P-1402
(2) Input Gear Part No. 5-P-1413
(3) Input Gear Part No. 5-P-1414
(4) Input Gear Part No. 5-P-1415
(5) Input Gear Part No. 5-P-1416
(6) Input Gear Part No. 5-P-1361
(7) Input Gear Part No. 5-P-1419
(8) Input Gear Part No. 5-P-1362
(9) Input Gear Part No. 5-P-1363
(10) Input Gear Part No. 5-P-1367
(11) Input Gear Part No. 5-P-1368
(12) Input Gear Part No. 5-P-1360
(13) Input Gear Part No. 5-P-1398
(14) Input Gear Part No. 5-P-1399
(15) Input Gear Part No. 5-P-1401

January 2008

Parker Hannifin Corporation
Chelsea Products Division
Olive Branch, MS 38654 USA

CX31

LEFT SIDE ONLY	RIGHT SIDE ONLY
TRANSMISSION GEAR DATA: L.H. 10-Bolt Opening Gear FORWARD of Centerline 88 Teeth - R.H. HELIX **PITCH LINE TO APERTURE FACE:** 1.7207" (43.7060MM)	**TRANSMISSION GEAR DATA:** R.H. 10-Bolt Opening Gear FORWARD of Centerline 88 Teeth - R.H. HELIX **PITCH LINE TO APERTURE FACE:** 1.7207" (43.7060MM)

Caution: Application Approval Required for P.T.O. Output Shaft Speeds Above 2500 R.P.M.

ONE SPEED - TWO GEAR - POWERSHIFT (HYDRAULIC)

LEFT Side P.T.O. Model	Inter. Torq.	Dir. Rot.	Engine % Hi	Engine % Rev	Filler Block	Adapter Assy.	Stud Kit	RIGHT Side P.T.O. Model	Inter. Torq.	Dir. Rot.	Engine % Hi	Engine % Rev	Filler Block	Adapter Assy.	Stud Kit
277SGKVP-*5 (3)	360	Eng	148				Furnished	277SGKVP-*5 (3)	360	Eng	148				Furnished
277SMKVP-*5 (4)	318	Eng	185				Furnished	277SMKVP-*5 (4)	318	Eng	185				Furnished
277SSKVP-*5 (5)	265	Eng	231				Furnished	277SSKVP-*5 (5)	265	Eng	231				Furnished
277XBKVP-*5 (6)	335	Eng	104				Furnished	277XBKVP-*5 (6)	335	Eng	104				Furnished
277XDKVP-*5 (8)	325	Eng	124				Furnished	277XDKVP-*5 (8)	325	Eng	124				Furnished
277XGKVP-*5 (9)	300	Eng	148				Furnished	277XGKVP-*5 (9)	300	Eng	148				Furnished
277XMKVP-*5 (10)	265	Eng	185				Furnished	277XMKVP-*5 (10)	265	Eng	185				Furnished
277XSKVP-*5 (11)	250	Eng	231				Furnished	277XSKVP-*5 (11)	250	Eng	231				Furnished
278SBKVP-*3 (1)	402	Eng	98				Furnished	278SBKVP-*3 (1)	402	Eng	98				Furnished
278SDKVP-*3 (2)	390	Eng	117				Furnished	278SDKVP-*3 (2)	390	Eng	117				Furnished
278SGKVP-*3 (3)	360	Eng	138				Furnished	278SGKVP-*3 (3)	360	Eng	138				Furnished
278SMKVP-*3 (4)	318	Eng	171				Furnished	278SMKVP-*3 (4)	318	Eng	171				Furnished
278SSKVP-*3 (5)	265	Eng	212				Furnished	278SSKVP-*3 (5)	265	Eng	212				Furnished
278XBKVP-*3 (6)	335	Eng	98				Furnished	278XBKVP-*3 (6)	335	Eng	98				Furnished
278XDKVP-*3 (8)	325	Eng	117				Furnished	278XDKVP-*3 (8)	325	Eng	117				Furnished
278XGKVP-*3 (9)	300	Eng	138				Furnished	278XGKVP-*3 (9)	300	Eng	138				Furnished
278XMKVP-*3 (10)	265	Eng	171				Furnished	278XMKVP-*3 (10)	265	Eng	171				Furnished
278XSKVP-*3 (11)	250	Eng	212				Furnished	278XSKVP-*3 (11)	250	Eng	212				Furnished
859XGKVP-*5 (12)	575	Eng	109				Furnished	859XGKVP-*5 (12)	575	Eng	109				Furnished
859XJKVP-*5 (16)	525	Eng	124				Furnished	859XJKVP-*5 (16)	525	Eng	124				Furnished
859XMKVP-*5 (13)	490	Eng	140				Furnished	859XMKVP-*5 (13)	490	Eng	140				Furnished
859XRKVP-*5 (14)	415	Eng	168				Furnished	859XRKVP-*5 (14)	415	Eng	168				Furnished
859XSKVP-*5 (17)	385	Eng	184				Furnished	859XSKVP-*5 (17)	385	Eng	184				Furnished
859XTKVP-*5 (15)	350	Eng	201				Furnished	859XTKVP-*5 (15)	350	Eng	201				Furnished

Continued Next Page

NOTE: See Front Section of Caterpillar Index for Pressure Hose Chart Requirements (SK-414) for Side Mount Applications. Rear Mounts come with the Hose Supplied.

NOTE: P.T.O. Units Require a Pressure Regulating Solenoid and are Shipped with Units Ordered for this Transmission ("KV" input gear).

NOTE: The Internal Drive Shaft for the Rear Mount Opening is Optional from Caterpillar and Must be Specified when the Transmission is Ordered.

NOTE: The Transmission Filter may Interfere with Large Pumps Mounted to P.T.O.s at the 8 o'clock (Left Side) Position. A Remote Mount Filter Kit can be ordered from Caterpillar if this Option is Required. Large Pumps will also Require the Use of the Rear Pressure Port for Oil Supply Requirements. (See Front Section for Location and Hose Requirements, SK-414)

NOTE: The 267 Series in the "5" Arrangement May Have Possible Interference Between the Lube Fitting and Converter Housing. Make Sure the Fitting is Screwed Completely In before you Torque Down the P.T.O. Verify that the Fitting is not Contacting the Transmission Housing. A "3" Arrangement with SAE "B" Output Must Either be "XQ" or "AK" Can be Used. The "XK" Output can Not be Used Due to Interference Between Flange and Pressure Lube Fitting.

NOTE: Harness to use for GM trucks is Chelsea part number 379927 if dash mounted P.T.O. switch is to be used

*** NOTE**: The "XV" Output for the CAT-D Rear Mount is Rated at Both 800 Lbs.ft Intermittent and 800 Lbs.ft Continuous. This Output is not Derated for Continuous Operation.

**** NOTE**: The CAT-H Rear Mount is Rated at 335 Lbs.ft for Both Intermittent and Continuous Applications(All Output Options) .

(1) Input Gear Part No. 5-P-1402
(2) Input Gear Part No. 5-P-1413
(3) Input Gear Part No. 5-P-1414
(4) Input Gear Part No. 5-P-1415
(5) Input Gear Part No. 5-P-1416
(6) Input Gear Part No. 5-P-1361
(8) Input Gear Part No. 5-P-1362
(9) Input Gear Part No. 5-P-1363
(10) Input Gear Part No. 5-P-1367
(11) Input Gear Part No. 5-P-1368
(12) Input Gear Part No. 5-P-1360
(13) Input Gear Part No. 5-P-1398
(14) Input Gear Part No. 5-P-1399
(15) Input Gear Part No. 5-P-1401
(16) Input Gear Part No. 5-P-1397
(17) Input Gear Part No. 5-P-1400

January 2008

CX31

REAR SIDE ONLY

TRANSMISSION GEAR DATA:
REAR 8-Bolt Opening
17 Teeth -
PITCH LINE TO APERTURE FACE:

Caution: Application Approval Required for P.T.O. Output Shaft Speeds Above 2500 R.P.M.

REAR Side P.T.O. Model	Inter. Torq.	Dir. Rot.	Engine % Hi	Engine % Rev	Filler Block	Adapter Assy.	Stud Kit	RIGHT Side P.T.O. Model	Inter. Torq.	Dir. Rot.	Engine % Hi	Engine % Rev	Filler Block	Adapter Assy.	Stud Kit
DIRECT DRIVE - REAR MOUNT															
CAT-D *	800	Opp	125				Furnished								
POWERSHIFT - REAR MOUNT (HYDRAULIC)															
CAT-H **	335	Opp	125				Furnished								

NOTE: See Front Section of Caterpillar Index for Pressure Hose Chart Requirements (SK-414) for Side Mount Applications. Rear Mounts come with the Hose Supplied.

NOTE: P.T.O. Units Require a Pressure Regulating Solenoid and are Shipped with Units Ordered for this Transmission ("KV" input gear).

NOTE: The Internal Drive Shaft for the Rear Mount Opening is Optional from Caterpillar and Must be Specified when the Transmission is Ordered.

NOTE: The Transmission Filter may Interfere with Large Pumps Mounted to P.T.O.s at the 8 o'clock (Left Side) Position. A Remote Mount Filter Kit can be ordered from Caterpillar if this Option is Required. Large Pumps will also Require the Use of the Rear Pressure Port for Oil Supply Requirements. (See Front Section for Location and Hose Requirements, SK-414)

NOTE: The 267 Series in the "5" Arrangement May Have Possible Interference Between the Lube Fitting and Converter Housing. Make Sure the Fitting is Screwed Completely In before you Torque Down the P.T.O. Verify that the Fitting is not Contacting the Transmission Housing. A "3" Arrangement with SAE "B" Output Must Either be "XQ" or "AK" Can be Used. The "XK" Output can Not be Used Due to Interference Between Flange and Pressure Lube Fitting.

NOTE: Harness to use for GM trucks is Chelsea part number 379927 if dash mounted P.T.O. switch is to be used

*** NOTE**: The "XV" Output for the CAT-D Rear Mount is Rated at Both 800 Lbs.ft Intermittent and 800 Lbs.ft Continuous. This Output is not Derated for Continuous Operation.

**** NOTE**: The CAT-H Rear Mount is Rated at 335 Lbs.ft for Both Intermittent and Continuous Applications(All Output Options) .

Parker Hannifin Corporation
Chelsea Products Division
Olive Branch, MS 38654 USA

CX28

LEFT SIDE ONLY	RIGHT SIDE ONLY
TRANSMISSION GEAR DATA: L.H. 10-Bolt Opening Gear FORWARD of Centerline 79 Teeth - R.H. HELIX **PITCH LINE TO APERTURE FACE:** 1.7207" (43.7060MM)	**TRANSMISSION GEAR DATA:** R.H. 10-Bolt Opening Gear FORWARD of Centerline 79 Teeth - R.H. HELIX **PITCH LINE TO APERTURE FACE:** 1.7207" (43.7060MM)

Caution: Application Approval Required for P.T.O. Output Shaft Speeds Above 2500 R.P.M.

LEFT Side P.T.O. Model	Inter. Torq.	Dir. Rot.	Engine % Hi	Engine % Rev	Filler Block	Adapter Assy.	Stud Kit	RIGHT Side P.T.O. Model	Inter. Torq.	Dir. Rot.	Engine % Hi	Engine % Rev	Filler Block	Adapter Assy.	Stud Kit
ONE SPEED - TWO GEAR - CONSTANT MESH															
267SBKVP-*5 (1)	402	Eng	94				Furnished	267SBKVP-*3 (1)	402	Eng	94				Furnished
267SDKVP-*5 (2)	390	Eng	112				Furnished	267SDKVP-*3 (2)	390	Eng	112				Furnished
267SGKVP-*5 (3)	360	Eng	133				Furnished	267SGKVP-*3 (3)	360	Eng	133				Furnished
267SMKVP-*5 (4)	318	Eng	167				Furnished	267SMKVP-*3 (4)	318	Eng	167				Furnished
267SSKVP-*5 (5)	265	Eng	207				Furnished	267SSKVP-*3 (5)	265	Eng	207				Furnished
267XBKVP-*5 (6)	335	Eng	94				Furnished	267XBKVP-*3 (6)	335	Eng	94				Furnished
267XCKVP-*5 (7)	330	Eng	99				Furnished	267XCKVP-*3 (7)	330	Eng	99				Furnished
267XDKVP-*5 (8)	325	Eng	112				Furnished	267XDKVP-*3 (8)	325	Eng	112				Furnished
267XGKVP-*5 (9)	300	Eng	133				Furnished	267XGKVP-*3 (9)	300	Eng	133				Furnished
267XMKVP-*5 (10)	265	Eng	167				Furnished	267XMKVP-*3 (10)	265	Eng	167				Furnished
267XSKVP-*5 (11)	250	Eng	207				Furnished	267XSKVP-*3 (11)	250	Eng	207				Furnished
269SBKVP-*3 (1)	402	Eng	88				Furnished	269SBKVP-*3 (1)	402	Eng	88				Furnished
269SDKVP-*3 (2)	390	Eng	105				Furnished	269SDKVP-*3 (2)	390	Eng	105				Furnished
269SGKVP-*3 (3)	360	Eng	124				Furnished	269SGKVP-*3 (3)	360	Eng	124				Furnished
269SMKVP-*3 (4)	318	Eng	154				Furnished	269SMKVP-*3 (4)	318	Eng	154				Furnished
269XBKVP-*3 (6)	335	Eng	88				Furnished	269XBKVP-*3 (6)	335	Eng	88				Furnished
269XDKVP-*3 (8)	325	Eng	105				Furnished	269XDKVP-*3 (8)	325	Eng	105				Furnished
269XGKVP-*3 (9)	300	Eng	124				Furnished	269XGKVP-*3 (9)	300	Eng	124				Furnished
269XMKVP-*3 (10)	265	Eng	154				Furnished	269XMKVP-*3 (10)	265	Eng	154				Furnished
								867XGKVP-*5 (12)	575	Eng	98				Furnished
								867XMKVP-*5 (13)	490	Eng	126				Furnished
								867XRKVP-*5 (14)	415	Eng	151				Furnished
								867XTKVP-*5 (15)	350	Eng	181				Furnished
ONE SPEED - TWO GEAR - POWERSHIFT (HYDRAULIC)															
278SBKVP-*3 (1)	402	Eng	88				Furnished	277SBKVP-*5 (1)	402	Eng	94				Furnished
278SDKVP-*3 (2)	390	Eng	105				Furnished	277SDKVP-*5 (2)	390	Eng	112				Furnished

Continued Next Page

NOTE: See Front Section of Caterpillar Index for Pressure Hose Chart Requirements (SK-414) for Side Mount Applications. Rear Mount Units come with Hose Supplied.

NOTE: Hotshift P.T.O. Units Require a Pressure Regulating Solenoid and are Shipped with Units Ordered for this Transmission ("KV" input gear).

NOTE: The Internal Drive Shaft for the Rear Mount Opening is Optional from Caterpillar and Must be Specified when the Transmission is Ordered.

NOTE: Large Pumps on the Left Hand Side (LHS) may Require the Use of the Rear Pressure Port for Oil Supply Requirements. If the Left Hand Side (LHS) P.T.O. opening is used, the transmission dipstick should be relocated to the Right Hand Side (RHS).

NOTE: A "3" Arrangement with SAE "B" Output Must Either be "XQ" or "AK". The "XK" Output can Not be Used Due to Interference Between Flange and Pressure Lube Fitting. On the LHS, if the 267 Series "5" arrangement is used, pump clearance is severely limited due to position of the transmission valve bank.. A "3" arrangement offers much more clearance.

NOTE: 859, 867, 277 Series will not fit and/or allow pump clearance on the Left Hand Side (LHS).

NOTE: Harness to use for GM trucks is Chelsea part number 379927 if dash mounted P.T.O. switch is to be used

***NOTE**: The "XV" Output for the CAT-D Rear Mount is Limited to 667 Lbs.ft Intermittent Torque Due to Transmission Load Limits. All Other Output Options are Limited by the Hydraulic Pump Output Shaft Spline.

**** NOTE**: The CAT-H Rear Mount is Rated at 335 Lbs.ft for Both Intermittent and Continuous Applications(All Output Options) .

(1) Input Gear Part No. 5-P-1402
(2) Input Gear Part No. 5-P-1413
(3) Input Gear Part No. 5-P-1414
(4) Input Gear Part No. 5-P-1415
(5) Input Gear Part No. 5-P-1416
(6) Input Gear Part No. 5-P-1361
(7) Input Gear Part No. 5-P-1419
(8) Input Gear Part No. 5-P-1362
(9) Input Gear Part No. 5-P-1363
(10) Input Gear Part No. 5-P-1367
(11) Input Gear Part No. 5-P-1368
(12) Input Gear Part No. 5-P-1360
(13) Input Gear Part No. 5-P-1398
(14) Input Gear Part No. 5-P-1399
(15) Input Gear Part No. 5-P-1401

January 2008

Parker Hannifin Corporation
Chelsea Products Division
Olive Branch, MS 38654 USA

CX28

LEFT SIDE ONLY	RIGHT SIDE ONLY
TRANSMISSION GEAR DATA: L.H. 10-Bolt Opening Gear FORWARD of Centerline 79 Teeth - R.H. HELIX **PITCH LINE TO APERTURE FACE:** 1.7207" (43.7060MM)	**TRANSMISSION GEAR DATA:** R.H. 10-Bolt Opening Gear FORWARD of Centerline 79 Teeth - R.H. HELIX **PITCH LINE TO APERTURE FACE:** 1.7207" (43.7060MM)

Caution: Application Approval Required for P.T.O. Output Shaft Speeds Above 2500 R.P.M.

ONE SPEED - TWO GEAR - POWERSHIFT (HYDRAULIC)

LEFT Side P.T.O. Model	Inter. Torq.	Dir. Rot.	Engine % Hi	Engine % Rev	Filler Block	Adapter Assy.	Stud Kit	RIGHT Side P.T.O. Model	Inter. Torq.	Dir. Rot.	Engine % Hi	Engine % Rev	Filler Block	Adapter Assy.	Stud Kit
278SGKVP-*3 (3)	360	Eng	124				Furnished	277SGKVP-*5 (3)	360	Eng	133				Furnished
278SMKVP-*3 (4)	318	Eng	154				Furnished	277SMKVP-*5 (4)	318	Eng	167				Furnished
278SSKVP-*3 (5)	265	Eng	191				Furnished	277SSKVP-*5 (5)	265	Eng	207				Furnished
278XBKVP-*3 (6)	335	Eng	88				Furnished	277XBKVP-*5 (6)	335	Eng	94				Furnished
278XDKVP-*3 (8)	325	Eng	105				Furnished	277XDKVP-*5 (8)	325	Eng	112				Furnished
278XGKVP-*3 (9)	300	Eng	124				Furnished	277XGKVP-*5 (9)	300	Eng	133				Furnished
278XMKVP-*3 (10)	265	Eng	154				Furnished	277XMKVP-*5 (10)	265	Eng	167				Furnished
278XSKVP-*3 (11)	250	Eng	191				Furnished	277XSKVP-*5 (11)	250	Eng	207				Furnished
								278SBKVP-*3 (1)	402	Eng	88				Furnished
								278SDKVP-*3 (2)	390	Eng	105				Furnished
								278SGKVP-*3 (3)	360	Eng	124				Furnished
								278SMKVP-*3 (4)	318	Eng	154				Furnished
								278SSKVP-*3 (5)	265	Eng	191				Furnished
								278XBKVP-*3 (6)	335	Eng	88				Furnished
								278XDKVP-*3 (8)	325	Eng	105				Furnished
								278XGKVP-*3 (9)	300	Eng	124				Furnished
								278XMKVP-*3 (10)	265	Eng	154				Furnished
								278XSKVP-*3 (11)	250	Eng	191				Furnished
								859XGKVP-*5 (12)	575	Eng	98				Furnished
								859XJKVP-*5 (16)	525	Eng	112				Furnished
								859XMKVP-*5 (13)	490	Eng	126				Furnished
								859XRKVP-*5 (14)	415	Eng	151				Furnished
								859XSKVP-*5 (17)	385	Eng	165				Furnished
								859XTKVP-*5 (15)	350	Eng	181				Furnished

Continued Next Page

NOTE: See Front Section of Caterpillar Index for Pressure Hose Chart Requirements (SK-414) for Side Mount Applications. Rear Mount Units come with Hose Supplied.

NOTE: Hotshift P.T.O. Units Require a Pressure Regulating Solenoid and are Shipped with Units Ordered for this Transmission ("KV" input gear).

NOTE: The Internal Drive Shaft for the Rear Mount Opening is Optional from Caterpillar and Must be Specified when the Transmission is Ordered.

NOTE: Large Pumps on the Left Hand Side (LHS) may Require the Use of the Rear Pressure Port for Oil Supply Requirements. If the Left Hand Side (LHS) P.T.O. opening is used, the transmission dipstick should be relocated to the Right Hand Side (RHS).

NOTE: A "3" Arrangement with SAE "B" Output Must Either be "XQ" or "AK". The "XK" Output can Not be Used Due to Interference Between Flange and Pressure Lube Fitting. On the LHS, if the 267 Series "5" arrangement is used, pump clearance is severely limited due to position of the transmission valve bank.. A "3" arrangement offers much more clearance.

NOTE: 859, 867, 277 Series will not fit and/or allow pump clearance on the Left Hand Side (LHS).

NOTE: Harness to use for GM trucks is Chelsea part number 379927 if dash mounted P.T.O. switch is to be used

***NOTE**: The "XV" Output for the CAT-D Rear Mount is Limited to 667 Lbs.ft Intermittent Torque Due to Transmission Load Limits. All Other Output Options are Limited by the Hydraulic Pump Output Shaft Spline.

**** NOTE**: The CAT-H Rear Mount is Rated at 335 Lbs.ft for Both Intermittent and Continuous Applications(All Output Options) .

(1) Input Gear Part No. 5-P-1402
(2) Input Gear Part No. 5-P-1413
(3) Input Gear Part No. 5-P-1414
(4) Input Gear Part No. 5-P-1415
(5) Input Gear Part No. 5-P-1416
(6) Input Gear Part No. 5-P-1361
(8) Input Gear Part No. 5-P-1362
(9) Input Gear Part No. 5-P-1363
(10) Input Gear Part No. 5-P-1367
(11) Input Gear Part No. 5-P-1368
(12) Input Gear Part No. 5-P-1360
(13) Input Gear Part No. 5-P-1398
(14) Input Gear Part No. 5-P-1399
(15) Input Gear Part No. 5-P-1401
(16) Input Gear Part No. 5-P-1397
(17) Input Gear Part No. 5-P-1400

January 2008

Parker Hannifin Corporation
Chelsea Products Division
Olive Branch, MS 38654 USA

CX28

REAR SIDE ONLY

TRANSMISSION GEAR DATA:

REAR 8-Bolt Opening

17 Teeth -

PITCH LINE TO APERTURE FACE:

Caution: Application Approval Required for P.T.O. Output Shaft Speeds Above 2500 R.P.M.

REAR Side P.T.O. Model	Inter. Torq.	Dir. Rot.	Engine % Hi	Engine % Rev	Filler Block	Adapter Assy.	Stud Kit	RIGHT Side P.T.O. Model	Inter. Torq.	Dir. Rot.	Engine % Hi	Engine % Rev	Filler Block	Adapter Assy.	Stud Kit
DIRECT DRIVE - REAR MOUNT															
CAT-D *	667	Opp	125				Furnished								
POWERSHIFT - REAR MOUNT (HYDRAULIC)															
CAT-H **	335	Opp	125				Furnished								

NOTE: See Front Section of Caterpillar Index for Pressure Hose Chart Requirements (SK-414) for Side Mount Applications. Rear Mount Units come with Hose Supplied.

NOTE: Hotshift P.T.O. Units Require a Pressure Regulating Solenoid and are Shipped with Units Ordered for this Transmission ("KV" input gear).

NOTE: The Internal Drive Shaft for the Rear Mount Opening is Optional from Caterpillar and Must be Specified when the Transmission is Ordered.

NOTE: Large Pumps on the Left Hand Side (LHS) may Require the Use of the Rear Pressure Port for Oil Supply Requirements. If the Left Hand Side (LHS) P.T.O. opening is used, the transmission dipstick should be relocated to the Right Hand Side (RHS).

NOTE: A "3" Arrangement with SAE "B" Output Must Either be "XQ" or "AK". The "XK" Output can Not be Used Due to Interference Between Flange and Pressure Lube Fitting. On the LHS, if the 267 Series "5" arrangement is used, pump clearance is severely limited due to position of the transmission valve bank.. A "3" arrangement offers much more clearance.

NOTE: 859, 867, 277 Series will not fit and/or allow pump clearance on the Left Hand Side (LHS).

NOTE: Harness to use for GM trucks is Chelsea part number 379927 if dash mounted P.T.O. switch is to be used

***NOTE**: The "XV" Output for the CAT-D Rear Mount is Limited to 667 Lbs.ft Intermittent Torque Due to Transmission Load Limits. All Other Output Options are Limited by the Hydraulic Pump Output Shaft Spline.

****NOTE**: The CAT-H Rear Mount is Rated at 335 Lbs.ft for Both Intermittent and Continuous Applications(All Output Options) .

CX35

LEFT SIDE ONLY	RIGHT SIDE ONLY
TRANSMISSION GEAR DATA: L.H. 10-Bolt Opening Gear FORWARD of Centerline 100 Teeth - R.H. HELIX **PITCH LINE TO APERTURE FACE:** 1.7207" (43.7060MM)	**TRANSMISSION GEAR DATA:** R.H. 10-Bolt Opening Gear FORWARD of Centerline 100 Teeth - R.H. HELIX **PITCH LINE TO APERTURE FACE:** 1.7207" (43.7060MM)

Caution: Application Approval Required for P.T.O. Output Shaft Speeds Above 2500 R.P.M.

LEFT Side P.T.O. Model	Inter. Torq.	Dir. Rot.	Engine % Hi	Engine % Rev	Filler Block	Adapter Assy.	Stud Kit	RIGHT Side P.T.O. Model	Inter. Torq.	Dir. Rot.	Engine % Hi	Engine % Rev	Filler Block	Adapter Assy.	Stud Kit
ONE SPEED - TWO GEAR - CONSTANT MESH															
267SBKVP-*5 (1)	402	Eng	118			Furnished		267SBKVP-*3 (1)	402	Eng	118			Furnished	
267SDKVP-*5 (2)	390	Eng	141			Furnished		267SDKVP-*3 (2)	390	Eng	141			Furnished	
267SGKVP-*5 (3)	360	Eng	168			Furnished		267SGKVP-*3 (3)	360	Eng	168			Furnished	
267SMKVP-*5 (4)	318	Eng	210			Furnished		267SMKVP-*3 (4)	318	Eng	210			Furnished	
267XBKVP-*5 (5)	335	Eng	118			Furnished		267XBKVP-*3 (5)	335	Eng	118			Furnished	
267XCKVP-*5 (6)	330	Eng	126			Furnished		267XCKVP-*3 (6)	330	Eng	126			Furnished	
267XDKVP-*5 (7)	325	Eng	141			Furnished		267XDKVP-*3 (7)	325	Eng	141			Furnished	
267XGKVP-*5 (8)	300	Eng	168			Furnished		267XGKVP-*3 (8)	300	Eng	168			Furnished	
267XMKVP-*5 (9)	265	Eng	210			Furnished		267XMKVP-*3 (9)	265	Eng	210			Furnished	
269SBKVP-*3 (1)	402	Eng	111			Furnished		269SBKVP-*3 (1)	402	Eng	111			Furnished	
269SDKVP-*3 (2)	390	Eng	132			Furnished		269SDKVP-*3 (2)	390	Eng	132			Furnished	
269SGKVP-*3 (3)	360	Eng	157			Furnished		269SGKVP-*3 (3)	360	Eng	157			Furnished	
269SMKVP-*3 (4)	318	Eng	194			Furnished		269SMKVP-*3 (4)	318	Eng	194			Furnished	
269XBKVP-*3 (5)	335	Eng	111			Furnished		269XBKVP-*3 (5)	335	Eng	111			Furnished	
269XDKVP-*3 (7)	325	Eng	132			Furnished		269XDKVP-*3 (7)	325	Eng	132			Furnished	
269XGKVP-*3 (8)	300	Eng	157			Furnished		269XGKVP-*3 (8)	300	Eng	157			Furnished	
269XMKVP-*3 (9)	265	Eng	194			Furnished		269XMKVP-*3 (9)	265	Eng	194			Furnished	
867XGKVP-*5 (10)	575	Eng	124			Furnished		867XGKVP-*5 (10)	575	Eng	124			Furnished	
867XMKVP-*5 (11)	490	Eng	160			Furnished		867XMKVP-*5 (11)	490	Eng	160			Furnished	
867XRKVP-*5 (12)	415	Eng	191			Furnished		867XRKVP-*5 (12)	415	Eng	191			Furnished	
ONE SPEED - TWO GEAR - POWERSHIFT (HYDRAULIC)															
277SBKVP-*5 (1)	402	Eng	118			Furnished		277SBKVP-*5 (1)	402	Eng	118			Furnished	
277SDKVP-*5 (2)	390	Eng	141			Furnished		277SDKVP-*5 (2)	390	Eng	141			Furnished	
277SGKVP-*5 (3)	360	Eng	168			Furnished		277SGKVP-*5 (3)	360	Eng	168			Furnished	
277SMKVP-*5 (4)	318	Eng	210			Furnished		277SMKVP-*5 (4)	318	Eng	210			Furnished	
277XBKVP-*5 (5)	335	Eng	118			Furnished		277XBKVP-*5 (5)	335	Eng	118			Furnished	

Continued Next Page

NOTE: See Front Section of Caterpillar Index for Pressure Hose Chart Requirements (SK-414) for Side Mount Applications. Rear Mounts come with the Hose Supplied.

NOTE: P.T.O. Units Require a Pressure Regulating Solenoid and are Shipped with Units Ordered for this Transmission ("KV" input gear).

NOTE: The Internal Drive Shaft for the Rear Mount Opening is Optional from Caterpillar and Must be Specified when the Transmission is Ordered.

NOTE: The Transmission Filter may Interfere with Large Pumps Mounted to P.T.O.s at the 8 o'clock (Left Side) Position. A Remote Mount Filter Kit can be ordered from Caterpillar if this Option is Required. Large Pumps will also Require the Use of the Rear Pressure Port for Oil Supply Requirements. (See Front Section for Location and Hose Requirements, SK-414)

NOTE: The 267 Series in the "5" Arrangement May Have Possible Interference Between the Lube Fitting and Converter Housing. Make Sure the Fitting is Screwed Completely In before you Torque Down the P.T.O. Verify that the Fitting is not Contacting the Transmission Housing. A "3" Arrangement with SAE "B" Output Must Either be "XQ" or "AK" Can be Used. The "XK" Output can Not be Used Due to Interference Between Flange and Pressure Lube Fitting.

NOTE: Harness to use for GM trucks is Chelsea part number 379927 if dash mounted P.T.O. switch is to be used

*** NOTE**: The "XV" Output for the CAT-D Rear Mount is Rated at Both 800 Lbs.ft Intermittent and 800 Lbs.ft Continuous. This Output is not Derated for Continuous Operation.

**** NOTE**: The CAT-H Rear Mount is Rated at 335 Lbs.ft for Both Intermittent and Continuous Applications(All Output Options) .

(1) Input Gear Part No. 5-P-1402
(2) Input Gear Part No. 5-P-1413
(3) Input Gear Part No. 5-P-1414
(4) Input Gear Part No. 5-P-1415
(5) Input Gear Part No. 5-P-1361
(6) Input Gear Part No. 5-P-1419
(7) Input Gear Part No. 5-P-1362
(8) Input Gear Part No. 5-P-1363
(9) Input Gear Part No. 5-P-1367
(10) Input Gear Part No. 5-P-1360
(11) Input Gear Part No. 5-P-1398
(12) Input Gear Part No. 5-P-1399

January 2008

Parker Hannifin Corporation
Chelsea Products Division
Olive Branch, MS 38654 USA

CX35

LEFT SIDE ONLY

TRANSMISSION GEAR DATA:
L.H. 10-Bolt Opening Gear FORWARD of Centerline
100 Teeth - R.H. HELIX
PITCH LINE TO APERTURE FACE:
1.7207" (43.7060MM)

RIGHT SIDE ONLY

TRANSMISSION GEAR DATA:
R.H. 10-Bolt Opening Gear FORWARD of Centerline
100 Teeth - R.H. HELIX
PITCH LINE TO APERTURE FACE:
1.7207" (43.7060MM)

Caution: Application Approval Required for P.T.O. Output Shaft Speeds Above 2500 R.P.M.

ONE SPEED - TWO GEAR - POWERSHIFT (HYDRAULIC)

LEFT Side P.T.O. Model	Inter. Torq.	Dir. Rot.	Engine % Hi	Engine % Rev	Filler Block	Adapter Assy.	Stud Kit	RIGHT Side P.T.O. Model	Inter. Torq.	Dir. Rot.	Engine % Hi	Engine % Rev	Filler Block	Adapter Assy.	Stud Kit
277XDKVP-*5 (7)	325	Eng	141				Furnished	277XDKVP-*5 (7)	325	Eng	141				Furnished
277XGKVP-*5 (8)	300	Eng	168				Furnished	277XGKVP-*5 (8)	300	Eng	168				Furnished
277XMKVP-*5 (9)	265	Eng	210				Furnished	277XMKVP-*5 (9)	265	Eng	210				Furnished
278SBKVP-*3 (1)	402	Eng	111				Furnished	278SBKVP-*3 (1)	402	Eng	111				Furnished
278SDKVP-*3 (2)	390	Eng	132				Furnished	278SDKVP-*3 (2)	390	Eng	132				Furnished
278SGKVP-*3 (3)	360	Eng	157				Furnished	278SGKVP-*3 (3)	360	Eng	157				Furnished
278SMKVP-*3 (4)	318	Eng	194				Furnished	278SMKVP-*3 (4)	318	Eng	194				Furnished
278XBKVP-*3 (5)	335	Eng	111				Furnished	278XBKVP-*3 (5)	335	Eng	111				Furnished
278XDKVP-*3 (7)	325	Eng	132				Furnished	278XDKVP-*3 (7)	325	Eng	132				Furnished
278XGKVP-*3 (8)	300	Eng	157				Furnished	278XGKVP-*3 (8)	300	Eng	157				Furnished
278XMKVP-*3 (9)	265	Eng	194				Furnished	278XMKVP-*3 (9)	265	Eng	194				Furnished
859XGKVP-*5 (10)	575	Eng	124				Furnished	859XGKVP-*5 (10)	575	Eng	124				Furnished
859XJKVP-*5 (13)	525	Eng	141				Furnished	859XJKVP-*5 (13)	525	Eng	141				Furnished
859XMKVP-*5 (11)	490	Eng	160				Furnished	859XMKVP-*5 (11)	490	Eng	160				Furnished
859XRKVP-*5 (12)	415	Eng	191				Furnished	859XRKVP-*5 (12)	415	Eng	191				Furnished
859XSKVP-*5 (14)	385	Eng	209				Furnished	859XSKVP-*5 (14)	385	Eng	209				Furnished

Continued Next Page

NOTE: See Front Section of Caterpillar Index for Pressure Hose Chart Requirements (SK-414) for Side Mount Applications. Rear Mounts come with the Hose Supplied.

NOTE: P.T.O. Units Require a Pressure Regulating Solenoid and are Shipped with Units Ordered for this Transmission ("KV" input gear).

NOTE: The Internal Drive Shaft for the Rear Mount Opening is Optional from Caterpillar and Must be Specified when the Transmission is Ordered.

NOTE: The Transmission Filter may Interfere with Large Pumps Mounted to P.T.O.s at the 8 o'clock (Left Side) Position. A Remote Mount Filter Kit can be ordered from Caterpillar if this Option is Required. Large Pumps will also Require the Use of the Rear Pressure Port for Oil Supply Requirements. (See Front Section for Location and Hose Requirements, SK-414)

NOTE: The 267 Series in the "5" Arrangement May Have Possible Interference Between the Lube Fitting and Converter Housing. Make Sure the Fitting is Screwed Completely In before you Torque Down the P.T.O. Verify that the Fitting is not Contacting the Transmission Housing. A "3" Arrangement with SAE "B" Output Must Either be "XQ" or "AK" Can be Used. The "XK" Output can Not be Used Due to Interference Between Flange and Pressure Lube Fitting.

NOTE: Harness to use for GM trucks is Chelsea part number 379927 if dash mounted P.T.O. switch is to be used

*** NOTE**: The "XV" Output for the CAT-D Rear Mount is Rated at Both 800 Lbs.ft Intermittent and 800 Lbs.ft Continuous. This Output is not Derated for Continuous Operation.

**** NOTE**: The CAT-H Rear Mount is Rated at 335 Lbs.ft for Both Intermittent and Continuous Applications(All Output Options) .

(1) Input Gear Part No. 5-P-1402
(2) Input Gear Part No. 5-P-1413
(3) Input Gear Part No. 5-P-1414
(4) Input Gear Part No. 5-P-1415
(5) Input Gear Part No. 5-P-1361
(7) Input Gear Part No. 5-P-1362
(8) Input Gear Part No. 5-P-1363
(9) Input Gear Part No. 5-P-1367
(10) Input Gear Part No. 5-P-1360
(11) Input Gear Part No. 5-P-1398
(12) Input Gear Part No. 5-P-1399
(13) Input Gear Part No. 5-P-1397
(14) Input Gear Part No. 5-P-1400

January 2008

Parker Hannifin Corporation
Chelsea Products Division
Olive Branch, MS 38654 USA

CX35

REAR SIDE ONLY

TRANSMISSION GEAR DATA:
REAR 8-Bolt Opening
17 Teeth -
PITCH LINE TO APERTURE FACE:

Caution: Application Approval Required for P.T.O. Output Shaft Speeds Above 2500 R.P.M.

REAR Side P.T.O. Model	Inter. Torq.	Dir. Rot.	Engine % Hi	Engine % Rev	Filler Block	Adapter Assy.	Stud Kit	RIGHT Side P.T.O. Model	Inter. Torq.	Dir. Rot.	Engine % Hi	Engine % Rev	Filler Block	Adapter Assy.	Stud Kit
DIRECT DRIVE - REAR MOUNT															
CAT-D *	800	Opp	125				Furnished								
POWERSHIFT - REAR MOUNT (HYDRAULIC)															
CAT-H **	335	Opp	125				Furnished								

NOTE: See Front Section of Caterpillar Index for Pressure Hose Chart Requirements (SK-414) for Side Mount Applications. Rear Mounts come with the Hose Supplied.

NOTE: P.T.O. Units Require a Pressure Regulating Solenoid and are Shipped with Units Ordered for this Transmission ("KV" input gear).

NOTE: The Internal Drive Shaft for the Rear Mount Opening is Optional from Caterpillar and Must be Specified when the Transmission is Ordered.

NOTE: The Transmission Filter may Interfere with Large Pumps Mounted to P.T.O.s at the 8 o'clock (Left Side) Position. A Remote Mount Filter Kit can be ordered from Caterpillar if this Option is Required. Large Pumps will also Require the Use of the Rear Pressure Port for Oil Supply Requirements. (See Front Section for Location and Hose Requirements, SK-414)

NOTE: The 267 Series in the "5" Arrangement May Have Possible Interference Between the Lube Fitting and Converter Housing. Make Sure the Fitting is Screwed Completely In before you Torque Down the P.T.O. Verify that the Fitting is not Contacting the Transmission Housing. A "3" Arrangement with SAE "B" Output Must Either be "XQ" or "AK" Can be Used. The "XK" Output can Not be Used Due to Interference Between Flange and Pressure Lube Fitting.

NOTE: Harness to use for GM trucks is Chelsea part number 379927 if dash mounted P.T.O. switch is to be used

*** NOTE**: The "XV" Output for the CAT-D Rear Mount is Rated at Both 800 Lbs.ft Intermittent and 800 Lbs.ft Continuous. This Output is not Derated for Continuous Operation.

**** NOTE**: The CAT-H Rear Mount is Rated at 335 Lbs.ft for Both Intermittent and Continuous Applications(All Output Options) .

TH48FT-E70

BOTTOM SIDE ONLY	RIGHT SIDE ONLY
TRANSMISSION GEAR DATA: BOT 8-Bolt Opening Gear FORWARD of Centerline 56 Teeth - SPUR **PITCH LINE TO APERTURE FACE:** 0.7677" (19.5000MM)	**TRANSMISSION GEAR DATA:** R.H. 8-Bolt Opening Gear FORWARD of Centerline 57 Teeth - SPUR **PITCH LINE TO APERTURE FACE:** 0.7850" (19.9300MM)

Caution: Application Approval Required for P.T.O. Output Shaft Speeds Above 2500 R.P.M.

BOTTOM Side P.T.O. Model	Inter. Torq.	Dir. Rot.	Engine % Hi	Engine % Rev	Filler Block	Adapter Assy.	Stud Kit	RIGHT Side P.T.O. Model	Inter. Torq.	Dir. Rot.	Engine % Hi	Engine % Rev	Filler Block	Adapter Assy.	Stud Kit
ONE SPEED - TWO GEAR - MECHANICAL SHIFT															
823XBAHX-*3 (1)	500	Opp	109				Furnished	823XBAHX-*3 (1)	500	Opp	109				Furnished
823XDAHX-*3 (2)	500	Opp	129				Furnished	823XDAHX-*3 (2)	500	Opp	129				Furnished
823XGAHX-*3 (3)	500	Opp	141				Furnished	823XGAHX-*3 (3)	500	Opp	141				Furnished
823XJAHX-*3 (4)	500	Opp	165				Furnished	823XJAHX-*3 (4)	500	Opp	165				Furnished
823XMAHX-*3 (5)	500	Opp	194				Furnished	823XMAHX-*3 (5)	500	Opp	194				Furnished
880XBAHX-*3 (6)	500	Opp	109				Furnished	880XBAHX-*3 (6)	500	Opp	109				Furnished
880XDAHX-*3 (7)	500	Opp	129				Furnished	880XDAHX-*3 (7)	500	Opp	129				Furnished
880XGAHX-*3 (8)	500	Opp	141				Furnished	880XGAHX-*3 (8)	500	Opp	141				Furnished
880XJAHX-*3 (9)	500	Opp	165				Furnished	880XJAHX-*3 (9)	500	Opp	165				Furnished
880XMAHX-*3 (10)	500	Opp	194				Furnished	880XMAHX-*3 (10)	500	Opp	194				Furnished
880XQAHX-*3 (11)	450	Opp	227				Furnished	880XQAHX-*3 (11)	450	Opp	227				Furnished
ONE SPEED - TWO GEAR - POWERSHIFT (AIR)															
885XBAHX-*3 (6)	500	Opp	109				Furnished	885XBAHX-*3 (6)	500	Opp	109				Furnished
885XGAHX-*3 (8)	500	Opp	141				Furnished	885XGAHX-*3 (8)	500	Opp	141				Furnished
885XJAHX-*3 (9)	500	Opp	165				Furnished	885XJAHX-*3 (9)	500	Opp	165				Furnished

Continued Next Page

NOTE: This Transmission is Not a True Automatic but the 56 and 57 Tooth P.T.O. Drive Gears are Turning All the Time, Therefore Powershift P.T.O. Models and Non-Shifting or Constant Mesh P.T.O. Models are Recommended.

NOTE: The 56 and 57 Tooth P.T.O. Drive Gears in this Transmission are Idler Gears, Therefore the P.T.O. Output Speeds are the Same on All Three (3) Openings.

(1) Input Gear Part No. 5-P-285
(2) Input Gear Part No. 5-P-971
(3) Input Gear Part No. 5-P-980
(4) Input Gear Part No. 5-P-325
(5) Input Gear Part No. 5-P-283
(6) Input Gear Part No. 5-P-1100
(7) Input Gear Part No. 5-P-1101
(8) Input Gear Part No. 5-P-1135
(9) Input Gear Part No. 5-P-1102
(10) Input Gear Part No. 5-P-1103
(11) Input Gear Part No. 5-P-1385

Parker Hannifin Corporation
Chelsea Products Division
Olive Branch, MS 38654 USA

TH48FT-E70

LEFT SIDE ONLY

TRANSMISSION GEAR DATA:

L.H. 8-Bolt Opening Gear FORWARD of Centerline

57 Teeth - SPUR

PITCH LINE TO APERTURE FACE:

0.7850" (19.9300MM)

Caution: Application Approval Required for P.T.O. Output Shaft Speeds Above 2500 R.P.M.

ONE SPEED - TWO GEAR - MECHANICAL SHIFT

LEFT Side P.T.O. Model	Inter. Torq.	Dir. Rot.	Engine % Hi	Engine % Rev	Filler Block	Adapter Assy.	Stud Kit
823XBAHX-*5 (1)	500	Opp	109				Furnished
823XDAHX-*5 (2)	500	Opp	129				Furnished
823XGAHX-*5 (3)	500	Opp	141				Furnished
823XJAHX-*5 (4)	500	Opp	165				Furnished
823XMAHX-*5 (5)	500	Opp	194				Furnished
880XBAHX-*5 (6)	500	Opp	109				Furnished
880XDAHX-*5 (7)	500	Opp	129				Furnished
880XGAHX-*5 (8)	500	Opp	141				Furnished
880XJAHX-*5 (9)	500	Opp	165				Furnished
880XMAHX-*5 (10)	500	Opp	194				Furnished
880XQAHX-*5 (11)	450	Opp	227				Furnished
885XBAHX-*5 (6)	500	Opp	109				Furnished
885XGAHX-*5 (8)	500	Opp	141				Furnished
885XJAHX-*5 (9)	500	Opp	165				Furnished

P.T.O. Model	Inter. Torq.	Dir. Rot.	Engine % Hi	Engine % Rev	Filler Block	Adapter Assy.	Stud Kit

NOTE: This Transmission is Not a True Automatic but the 56 and 57 Tooth P.T.O. Drive Gears are Turning All the Time, Therefore Powershift P.T.O. Models and Non-Shifting or Constant Mesh P.T.O. Models are Recommended.

NOTE: The 56 and 57 Tooth P.T.O. Drive Gears in this Transmission are Idler Gears, Therefore the P.T.O. Output Speeds are the Same on All Three (3) Openings.

(1) Input Gear Part No. 5-P-285
(2) Input Gear Part No. 5-P-971
(3) Input Gear Part No. 5-P-980
(4) Input Gear Part No. 5-P-325
(5) Input Gear Part No. 5-P-283
(6) Input Gear Part No. 5-P-1100
(7) Input Gear Part No. 5-P-1101
(8) Input Gear Part No. 5-P-1135
(9) Input Gear Part No. 5-P-1102
(10) Input Gear Part No. 5-P-1103
(11) Input Gear Part No. 5-P-1385

TH48FT-E80

BOTTOM SIDE ONLY	RIGHT SIDE ONLY
TRANSMISSION GEAR DATA: BOT 8-Bolt Opening Gear FORWARD of Centerline 51 Teeth - SPUR **PITCH LINE TO APERTURE FACE:** 0.7846" (19.9000MM)	**TRANSMISSION GEAR DATA:** R.H. 8-Bolt Opening Gear FORWARD of Centerline 57 Teeth - SPUR **PITCH LINE TO APERTURE FACE:** 0.7850" (19.9300MM)

Caution: Application Approval Required for P.T.O. Output Shaft Speeds Above 2500 R.P.M.

BOTTOM Side P.T.O. Model	Inter. Torq.	Dir. Rot.	Engine % Hi	Engine % Rev	Filler Block	Adapter Assy.	Stud Kit	RIGHT Side P.T.O. Model	Inter. Torq.	Dir. Rot.	Engine % Hi	Engine % Rev	Filler Block	Adapter Assy.	Stud Kit
ONE SPEED - TWO GEAR - MECHANICAL SHIFT															
823XBAHX-*3 (1)	500	Opp	109				Furnished	823XBAHX-*3 (1)	500	Opp	109				Furnished
823XDAHX-*3 (2)	500	Opp	129				Furnished	823XDAHX-*3 (2)	500	Opp	129				Furnished
823XGAHX-*3 (3)	500	Opp	141				Furnished	823XGAHX-*3 (3)	500	Opp	141				Furnished
823XJAHX-*3 (4)	500	Opp	165				Furnished	823XJAHX-*3 (4)	500	Opp	165				Furnished
823XMAHX-*3 (5)	500	Opp	194				Furnished	823XMAHX-*3 (5)	500	Opp	194				Furnished
880XBAHX-*3 (6)	500	Opp	109				Furnished	880XBAHX-*3 (6)	500	Opp	109				Furnished
880XDAHX-*3 (7)	500	Opp	129				Furnished	880XDAHX-*3 (7)	500	Opp	129				Furnished
880XGAHX-*3 (8)	500	Opp	141				Furnished	880XGAHX-*3 (8)	500	Opp	141				Furnished
880XJAHX-*3 (9)	500	Opp	165				Furnished	880XJAHX-*3 (9)	500	Opp	165				Furnished
880XMAHX-*3 (10)	500	Opp	194				Furnished	880XMAHX-*3 (10)	500	Opp	194				Furnished
880XQAHX-*3 (11)	450	Opp	227				Furnished	880XQAHX-*3 (11)	450	Opp	227				Furnished
ONE SPEED - TWO GEAR - POWERSHIFT (AIR)															
885XBAHX-*3 (6)	500	Opp	109				Furnished	885XBAHX-*3 (6)	500	Opp	109				Furnished
885XGAHX-*3 (8)	500	Opp	141				Furnished	885XGAHX-*3 (8)	500	Opp	141				Furnished
885XJAHX-*3 (9)	500	Opp	165				Furnished	885XJAHX-*3 (9)	500	Opp	165				Furnished

Continued Next Page

NOTE: This Transmission is Not a True Automatic but the 51 and 57 Tooth P.T.O. Drive Gears are Turning All the Time, Therefore Powershift P.T.O. Models and Non-Shifting or Constant Mesh P.T.O. Models are Recommended.

NOTE: The 51 and 57 Tooth P.T.O. Drive Gears in this Transmission are Idler Gears, Therefore the P.T.O. Output Speeds are the Same on All Three (3) Openings.

(1) Input Gear Part No. 5-P-285
(2) Input Gear Part No. 5-P-971
(3) Input Gear Part No. 5-P-980
(4) Input Gear Part No. 5-P-325
(5) Input Gear Part No. 5-P-283
(6) Input Gear Part No. 5-P-1100
(7) Input Gear Part No. 5-P-1101
(8) Input Gear Part No. 5-P-1135
(9) Input Gear Part No. 5-P-1102
(10) Input Gear Part No. 5-P-1103
(11) Input Gear Part No. 5-P-1385

Parker Hannifin Corporation
Chelsea Products Division
Olive Branch, MS 38654 USA

TH48FT-E80

LEFT SIDE ONLY

TRANSMISSION GEAR DATA:

L.H. 8-Bolt Opening Gear FORWARD of Centerline

57 Teeth - SPUR

PITCH LINE TO APERTURE FACE:

0.7850" (19.9300MM)

Caution: Application Approval Required for P.T.O. Output Shaft Speeds Above 2500 R.P.M.

ONE SPEED - TWO GEAR - MECHANICAL SHIFT

LEFT Side P.T.O. Model	Inter. Torq.	Dir. Rot.	Engine % Hi	Engine % Rev	Filler Block	Adapter Assy.	Stud Kit	P.T.O. Model	Inter. Torq.	Dir. Rot.	Engine % Hi	Engine % Rev	Filler Block	Adapter Assy.	Stud Kit
823XBAHX-*5 (1)	500	Opp	109				Furnished								
823XDAHX-*5 (2)	500	Opp	129				Furnished								
823XGAHX-*5 (3)	500	Opp	141				Furnished								
823XJAHX-*5 (4)	500	Opp	165				Furnished								
823XMAHX-*5 (5)	500	Opp	194				Furnished								
880XBAHX-*5 (6)	500	Opp	109				Furnished								
880XDAHX-*5 (7)	500	Opp	129				Furnished								
880XGAHX-*5 (8)	500	Opp	141				Furnished								
880XJAHX-*5 (9)	500	Opp	165				Furnished								
880XMAHX-*5 (10)	500	Opp	194				Furnished								
880XQAHX-*5 (11)	450	Opp	227				Furnished								
885XBAHX-*5 (6)	500	Opp	109				Furnished								
885XGAHX-*5 (8)	500	Opp	141				Furnished								
885XJAHX-*5 (9)	500	Opp	165				Furnished								

NOTE: This Transmission is Not a True Automatic but the 51 and 57 Tooth P.T.O. Drive Gears are Turning All the Time, Therefore Powershift P.T.O. Models and Non-Shifting or Constant Mesh P.T.O. Models are Recommended.

NOTE: The 51 and 57 Tooth P.T.O. Drive Gears in this Transmission are Idler Gears, Therefore the P.T.O. Output Speeds are the Same on All Three (3) Openings.

(1) Input Gear Part No. 5-P-285
(2) Input Gear Part No. 5-P-971
(3) Input Gear Part No. 5-P-980
(4) Input Gear Part No. 5-P-325
(5) Input Gear Part No. 5-P-283
(6) Input Gear Part No. 5-P-1100
(7) Input Gear Part No. 5-P-1101
(8) Input Gear Part No. 5-P-1135
(9) Input Gear Part No. 5-P-1102
(10) Input Gear Part No. 5-P-1103
(11) Input Gear Part No. 5-P-1385

Notes



CHELSEA

⚠ WARNING

FAILURE OR IMPROPER SELECTION OR IMPROPER USE OF THE PRODUCTS AND/OR SYSTEMS DESCRIBED HEREIN OR RELATED ITEMS CAN CAUSE DEATH, PERSONAL INJURY AND PROPERTY DAMAGE.

This document and other information from Parker Hannifin Corporation, its subsidiaries and authorized distributors provide product and/or system options for further investigation by users having technical expertise. It is important that you analyze all aspects of your application and review the information concerning the product or system in the current product catalog. Due to the variety of operating conditions and applications for these products or systems, the user, through its own analysis and testing, is solely responsible for making the final selection of the products and systems and assuring that all performance, safety and warning requirements of the application are met.

The products described herein, including without limitation, product features, specifications, designs, availability and pricing, are subject to change by Parker Hannifin Corporation and its subsidiaries at any time without notice.

Offer of Sale

The items described in this document are hereby offered for sale by Parker Hannifin Corporation, its subsidiaries or its authorized distributors. This offer and its acceptance are governed by the provisions stated in the "Offer of Sale".

© Copyright 2008, Parker Hannifin Corporation, All Rights Reserved

Parker Hannifin Corporation
Chelsea Products Division
Olive Branch, MS 38654 USA

Transmission Make and Model	P.T.O. Appl. Number	Number Forward Speeds	Teeth in P.T.O. Driver
912 AH (6 Pitch Spur)	CHL-3	1	L39-R39
912 AH (6 Pitch Spur)(Top)	CHL-3A	1	T39
941 (6P 20 SPUR)	CHL-4	1	L23-R23

IMPORTANT: See Safety Information in Section I of the Chelsea Applications catalog HY25-3000/US.

Transmission P.T.O. Driver & Aperatures (Viewed from Rear of Transmission)

L-Left Side R-Right Side B-Bottom Side T-Top Side

For transmission not listed, contact your authorized Chelsea Distributor.

January 2008

Parker Hannifin Corporation
Chelsea Products Division
Olive Branch, MS 38654 USA

912 AH

LEFT SIDE ONLY	RIGHT SIDE ONLY
TRANSMISSION GEAR DATA: L.H. 8-Bolt Opening Gear FORWARD of Centerline 39 Teeth - SPUR **PITCH LINE TO APERTURE FACE:** .8100" (20.5700MM)	**TRANSMISSION GEAR DATA:** R.H. 8-Bolt Opening Gear FORWARD of Centerline 39 Teeth - SPUR **PITCH LINE TO APERTURE FACE:** .8100" (20.5700MM)

Caution: Application Approval Required for P.T.O. Output Shaft Speeds Above 2500 R.P.M.

LEFT Side P.T.O. Model	Inter. Torq.	Dir. Rot.	Engine % Hi	Engine % Rev	Filler Block	Adapter Assy.	Stud Kit	RIGHT Side P.T.O. Model	Inter. Torq.	Dir. Rot.	Engine % Hi	Engine % Rev	Filler Block	Adapter Assy.	Stud Kit
ONE SPEED - SINGLE GEAR - MECHANICAL SHIFT															
100XRAHX-*3 (1)	125	Opp	162			328481X	Furnished	100XRAHX-*3 (1)	125	Opp	162			328481X	Furnished
812XKAHX-*3	400	Opp	108				Furnished	812XKAHX-*3	400	Opp	108				Furnished
ONE SPEED - TWO GEAR - MECHANICAL SHIFT															
221ZCAHX-*5	250	Eng	72		7-A-032(P)(2)	328564X	Furnished	221ZCAHX-*3	250	Eng	72		7-A-032(P)(2)	328564X	Furnished
221ZEAHX-*5	250	Eng	84			328564X	Furnished	221ZEAHX-*3	250	Eng	84			328564X	Furnished
221ZLAHX-*5	200	Eng	112			328564X	Furnished	221ZLAHX-*3	200	Eng	112			328564X	Furnished
221ZPAHX-*5	200	Eng	136			328564X	Furnished	221ZPAHX-*3	200	Eng	136			328564X	Furnished
442ZFAHX-*5 (3)	250	Eng	101			328564X	Furnished	442ZFAHX-*3 (3)	250	Eng	101			328564X	Furnished
442ZHAHX-*5 (4)	250	Eng	117			328564X	Furnished	442ZHAHX-*3 (4)	250	Eng	117			328564X	Furnished
442ZLAHX-*5 (5)	250	Eng	130			328564X	Furnished	442ZLAHX-*3 (5)	250	Eng	130			328564X	Furnished
442ZQAHX-*5 (5)	225	Eng	140			328564X	Furnished	442ZQAHX-*3 (5)	225	Eng	140			328564X	Furnished
442ZRAHX-*5 (5)	225	Eng	162			328564X	Furnished	442ZRAHX-*3 (5)	225	Eng	162			328564X	Furnished
442ZSAHX-*5 (5)	200	Eng	193			328564X	Furnished	442ZSAHX-*3 (5)	200	Eng	193			328564X	Furnished
442ZUAHX-*5 (5)	195	Eng	230			328564X	Furnished	442ZUAHX-*3 (5)	195	Eng	230			328564X	Furnished
442ZWAHX-*5 (5)	175	Eng	271			328564X	Furnished	442ZWAHX-*3 (5)	175	Eng	271			328564X	Furnished
442ZXAHX-*5 (5)	140	Eng	321			328564X	Furnished	442ZXAHX-*3 (5)	140	Eng	321			328564X	Furnished
489XFAHX-*5 (3)	250	Eng	101				Furnished	489XFAHX-*3 (3)	250	Eng	101				Furnished
489XHAHX-*5 (4)	250	Eng	117				Furnished	489XHAHX-*3 (4)	250	Eng	117				Furnished
489XLAHX-*5 (5)	250	Eng	130				Furnished	489XLAHX-*3 (5)	250	Eng	130				Furnished
489XQAHX-*5 (5)	225	Eng	140				Furnished	489XQAHX-*3 (5)	225	Eng	140				Furnished
489XRAHX-*5 (5)	225	Eng	162				Furnished	489XRAHX-*3 (5)	225	Eng	162				Furnished
489XSAHX-*5 (5)	200	Eng	193				Furnished	489XSAHX-*3 (5)	200	Eng	193				Furnished
489XUAHX-*5 (5)	195	Eng	230				Furnished	489XUAHX-*3 (5)	195	Eng	230				Furnished
489XWAHX-*5 (5)	175	Eng	271				Furnished	489XWAHX-*3 (5)	175	Eng	271				Furnished
489XXAHX-*5 (5)	140	Eng	321				Furnished	489XXAHX-*3 (5)	140	Eng	321				Furnished
680XFAHX-*5 (6)	375	Eng	101				Furnished	680XFAHX-*3 (6)	375	Eng	101				Furnished
680XQAHX-*5 (7)	375	Eng	140				Furnished	680XQAHX-*3 (7)	375	Eng	140				Furnished
680XSAHX-*5 (8)	325	Eng	193				Furnished	680XSAHX-*3 (8)	325	Eng	193				Furnished

Continued Next Page

CAUTION: Do not use geared adapters with 442 "A" and "C" ratios.

CAUTION: 660/680 Series: Applications above 1500 RPM output shaft speed, contact Chelsea Technical Service for approval.

NOTE: If two or three 8 bolt P.T.O.s are to be mounted on split shaft use stud kit 328170-190X to prevent thread interference.

NOTE: The AK & XK output flanges can not be used with the "A" & "C" ratios on the 489 Series P.T.O.s due to mounting stud interference. Use a RA or RB rotatable flange for the XK and the RA for the AK flange.

NOTE: If Ordering the 230/231 Series with the Shaft Brake Option, order the "BA" Output for Automatic Transmissions and the "BD" Output for Manual Transmissions.

(1) Gear and Shaft Kit No. KXA-2-P-565
(2) Filler block furnished with P.T.O.
(3) Input Gear Part No. 5-P-1077
(4) Input Gear Part No. 5-P-1364
(5) Input Gear Part No. 5-P-1004
(6) Input Gear Part No. 5-P-1242
(7) Input Gear Part No. 5-P-1246
(8) Input Gear Part No. 5-P-1322

912 AH

LEFT SIDE ONLY	RIGHT SIDE ONLY
TRANSMISSION GEAR DATA: L.H. 8-Bolt Opening Gear FORWARD of Centerline 39 Teeth - SPUR **PITCH LINE TO APERTURE FACE:** .8100" (20.5700MM)	**TRANSMISSION GEAR DATA:** R.H. 8-Bolt Opening Gear FORWARD of Centerline 39 Teeth - SPUR **PITCH LINE TO APERTURE FACE:** .8100" (20.5700MM)

Caution: Application Approval Required for P.T.O. Output Shaft Speeds Above 2500 R.P.M.

LEFT Side P.T.O. Model	Inter. Torq.	Dir. Rot.	Engine % Hi	Engine % Rev	Filler Block	Adapter Assy.	Stud Kit	RIGHT Side P.T.O. Model	Inter. Torq.	Dir. Rot.	Engine % Hi	Engine % Rev	Filler Block	Adapter Assy.	Stud Kit
ONE SPEED - TWO GEAR - MECHANICAL SHIFT															
823XBAHX-*5 (9)	500	Eng	69				Furnished	823XBAHX-*3 (9)	500	Eng	69				Furnished
823XJAHX-*5 (10)	500	Eng	104				Furnished	823XJAHX-*3 (10)	500	Eng	104				Furnished
823XMAHX-*5 (11)	500	Eng	122				Furnished	823XMAHX-*3 (11)	500	Eng	122				Furnished
823XRAHX-*5 (12)	400	Eng	168				Furnished	823XRAHX-*3 (12)	400	Eng	168				Furnished
823XTKTX-*5 (13)	350	Eng	204		8-A-165 (2)		Furnished	823XTKTX-*3 (13)	350	Eng	204		8-A-165 (2)		Furnished
880XBAHX-*5 (14)	500	Eng	69				Furnished	880XBAHX-*3 (14)	500	Eng	69				Furnished
880XDAHX-*5 (15)	500	Eng	81				Furnished	880XDAHX-*3 (15)	500	Eng	81				Furnished
880XGAHX-*5 (16)	500	Eng	88				Furnished	880XGAHX-*3 (16)	500	Eng	88				Furnished
880XJAHX-*5 (17)	500	Eng	104				Furnished	880XJAHX-*3 (17)	500	Eng	104				Furnished
880XMAHX-*5 (18)	500	Eng	122				Furnished	880XMAHX-*3 (18)	500	Eng	122				Furnished
880XQAHX-*5 (19)	450	Eng	142				Furnished	880XQAHX-*3 (19)	450	Eng	142				Furnished
880XRAHX-*5 (20)	400	Eng	168				Furnished	880XRAHX-*3 (20)	400	Eng	168				Furnished
880XTAHX-*5 (21)	350	Eng	217				Furnished	880XTAHX-*3 (21)	350	Eng	217				Furnished
ONE SPEED - TWO GEAR - POWERSHIFT (AIR)															
230XAAJX-*5	250	Eng	53		7-A-032(P)	328481X	Furnished	230XAAJX-*3	250	Eng	53		7-A-032(P)	328481X	Furnished
230XBAJX-*5	250	Eng	69		7-A-032(P)	328481X	Furnished	230XBAJX-*3	250	Eng	69		7-A-032(P)	328481X	Furnished
230XDAJX-*5	250	Eng	80		7-A-032(P)	328481X	Furnished	230XDAJX-*3	250	Eng	80		7-A-032(P)	328481X	Furnished
230XKAJX-*5	250	Eng	108		7-A-032(P)	328481X	Furnished	230XKAJX-*3	250	Eng	108		7-A-032(P)	328481X	Furnished
230XQAJX-*5	250	Eng	143		7-A-032(P)	328481X	Furnished	230XQAJX-*3	250	Eng	143		7-A-032(P)	328481X	Furnished
230XUAJX-*5	225	Eng	229		7-A-032(P)	328481X	Furnished	230XUAJX-*3	225	Eng	229		7-A-032(P)	328481X	Furnished
236ZDAHX-*5 (5)	250	Eng	105			328564X	Furnished	236ZDAHX-*3 (5)	250	Eng	105			328564X	Furnished
236ZKAHX-*5 (5)	250	Eng	135			328564X	Furnished	236ZKAHX-*3 (5)	250	Eng	135			328564X	Furnished
236ZQAHX-*5 (5)	250	Eng	182			328564X	Furnished	236ZQAHX-*3 (5)	250	Eng	182			328564X	Furnished
236ZUAHX-*5 (5)	225	Eng	209			328564X	Furnished	236ZUAHX-*3 (5)	225	Eng	209			328564X	Furnished
885XBAHX-*5 (14)	500	Eng	69				Furnished	885XBAHX-*3 (14)	500	Eng	69				Furnished
885XGAHX-*5 (16)	500	Eng	88				Furnished	885XGAHX-*3 (16)	500	Eng	88				Furnished
885XJAHX-*5 (17)	500	Eng	104				Furnished	885XJAHX-*3 (17)	500	Eng	104				Furnished
885XMAHX-*5 (18)	500	Eng	122				Furnished	885XMAHX-*3 (18)	500	Eng	122				Furnished

Continued Next Page

CAUTION: Do not use geared adapters with 442 "A" and "C" ratios.

CAUTION: 660/680 Series: Applications above 1500 RPM output shaft speed, contact Chelsea Technical Service for approval.

NOTE: If two or three 8 bolt P.T.O.s are to be mounted on split shaft use stud kit 328170-190X to prevent thread interference.

NOTE: The AK & XK output flanges can not be used with the "A" & "C" ratios on the 489 Series P.T.O.s due to mounting stud interference. Use a RA or RB rotatable flange for the XK and the RA for the AK flange.

NOTE: If Ordering the 230/231 Series with the Shaft Brake Option, order the "BA" Output for Automatic Transmissions and the "BD" Output for Manual Transmissions.

(2) Filler block furnished with P.T.O.
(5) Input Gear Part No. 5-P-1004
(9) Input Gear Part No. 5-P-285
(10) Input Gear Part No. 5-P-325
(11) Input Gear Part No. 5-P-283
(12) Input Gear Part No. 5-P-721
(13) Input Gear Part No. 5-P-1395
(14) Input Gear Part No. 5-P-1100
(15) Input Gear Part No. 5-P-1101
(16) Input Gear Part No. 5-P-1135
(17) Input Gear Part No. 5-P-1102
(18) Input Gear Part No. 5-P-1103
(19) Input Gear Part No. 5-P-1385
(20) Input Gear Part No. 5-P-1104
(21) Input Gear Part No. 5-P-1105

912 AH

LEFT SIDE ONLY	RIGHT SIDE ONLY
TRANSMISSION GEAR DATA: L.H. 8-Bolt Opening Gear FORWARD of Centerline 39 Teeth - SPUR **PITCH LINE TO APERTURE FACE:** .8100" (20.5700MM)	**TRANSMISSION GEAR DATA:** R.H. 8-Bolt Opening Gear FORWARD of Centerline 39 Teeth - SPUR **PITCH LINE TO APERTURE FACE:** .8100" (20.5700MM)

Caution: Application Approval Required for P.T.O. Output Shaft Speeds Above 2500 R.P.M.

LEFT Side P.T.O. Model	Inter. Torq.	Dir. Rot.	Engine % Hi	Engine % Rev	Filler Block	Adapter Assy.	Stud Kit	RIGHT Side P.T.O. Model	Inter. Torq.	Dir. Rot.	Engine % Hi	Engine % Rev	Filler Block	Adapter Assy.	Stud Kit
ONE SPEED - FORWARD & REVERSE															
340SFAHX-*5 (22)	200	Eng	88	92	7-A-032(P) 7-A-140 (2)	310778X	Furnished	340SFAHX-*5 (22)	200	Eng	88	92	7-A-032(P) 7-A-140 (2)	310778X	Furnished
352ZSAHX-*5 (5)	140	Eng	196	254		328564X	Furnished	352ZSAHX-*5 (5)	140	Eng	196	254		328564X	Furnished
863XBAHX-*5	500	Eng	69	85			Furnished	863XBAHX-*5	500	Eng	69	85			Furnished
ONE SPEED - DUAL SHAFT															
452ZSAHX-*5 (5)	140	Eng	196			328564X	Furnished	452ZSAHX-*3 (5)	140	Eng	196			328564X	Furnished
GEARED ADAPTERS															
628XAHX-4AH							Furnished	628XAHX-3AH							Furnished

CAUTION: Do not use geared adapters with 442 "A" and "C" ratios.

CAUTION: 660/680 Series: Applications above 1500 RPM output shaft speed, contact Chelsea Technical Service for approval.

NOTE: If two or three 8 bolt P.T.O.s are to be mounted on split shaft use stud kit 328170-190X to prevent thread interference.

NOTE: The AK & XK output flanges can not be used with the "A" & "C" ratios on the 489 Series P.T.O.s due to mounting stud interference. Use a RA or RB rotatable flange for the XK and the RA for the AK flange.

NOTE: If Ordering the 230/231 Series with the Shaft Brake Option, order the "BA" Output for Automatic Transmissions and the "BD" Output for Manual Transmissions.

(2) Filler block furnished with P.T.O.
(5) Input Gear Part No. 5-P-1004
(22) Input Gear Part No. 5-P-581

912 AH

TOP SIDE ONLY

TRANSMISSION GEAR DATA:
TOP 8-Bolt Opening Gear FORWARD of Centerline
39 Teeth - SPUR

PITCH LINE TO APERTURE FACE:
.8100" (20.5700MM)

Caution: Application Approval Required for P.T.O. Output Shaft Speeds Above 2500 R.P.M.

ONE SPEED - TWO GEAR - MECHANICAL SHIFT

P.T.O. Model	Inter. Torq.	Dir. Rot.	Engine % Hi	Engine % Rev	Filler Block	Adapter Assy.	Stud Kit
221ZCAHP-*3	250	Eng	72		7-A-032(P)(1)	328564X	Furnished
221ZEAHP-*3	250	Eng	84			328564X	Furnished
221ZLAHP-*3	200	Eng	112			328564X	Furnished
221ZPAHP-*3	200	Eng	136			328564X	Furnished
442ZAAHP-*3 (2)	250	Eng	64			328564X	Furnished
442ZCAHP-*3 (3)	250	Eng	81			328564X	Furnished
442ZFAHP-*3 (4)	250	Eng	101			328564X	Furnished
442ZHAHP-*3 (5)	250	Eng	117			328564X	Furnished
442ZLAHP-*3 (6)	250	Eng	130			328564X	Furnished
442ZQAHP-*3 (6)	225	Eng	140			328564X	Furnished
442ZRAHP-*3 (6)	225	Eng	162			328564X	Furnished
442ZSAHP-*3 (6)	200	Eng	193			328564X	Furnished
442ZUAHP-*3 (6)	195	Eng	230			328564X	Furnished
442ZWAHP-*3 (6)	175	Eng	271			328564X	Furnished
442ZXAHP-*3 (6)	140	Eng	321			328564X	Furnished
489XAAHP-*3 (2)	250	Eng	64				Furnished
489XCAHP-*3 (3)	250	Eng	81				Furnished
489XFAHP-*3 (4)	250	Eng	101				Furnished
489XHAHP-*3 (5)	250	Eng	117				Furnished
489XLAHP-*3 (6)	250	Eng	130				Furnished
489XQAHP-*3 (6)	225	Eng	140				Furnished
489XRAHP-*3 (6)	225	Eng	162				Furnished
489XSAHP-*3 (6)	200	Eng	193				Furnished
489XUAHP-*3 (6)	195	Eng	230				Furnished
489XWAHP-*3 (6)	175	Eng	271				Furnished
489XXAHP-*3 (6)	140	Eng	321				Furnished
680XFAHP-*3 (7)	375	Eng	101				Furnished
680XQAHP-*3 (8)	375	Eng	140				Furnished
680XSAHP-*3 (9)	325	Eng	193				Furnished

TOP Side P.T.O. Model	Inter. Torq.	Dir. Rot.	Engine % Hi	Engine % Rev	Filler Block	Adapter Assy.	Stud Kit

Continued Next Page

CAUTION: Do not use geared adapters with 442 "A" and "C" ratios.

CAUTION: 660/680 Series: Applications above 1500 RPM output shaft speed, contact Chelsea Technical Service for approval.

NOTE: P.T.O.s for this application must be ordered with "L" output designator for self lube option. EX: 442XFAHP-W3LD for self lube with a 1.25" std. output.

NOTE: Pressure lube installation kits must be ordered separately. 880 Series P.T.O.s use kit 329110-1X, all other models use 329110X.

NOTE: If two or three 8 bolt P.T.O.s are to be mounted on split shaft, use stud kit 328170-190X to prevent thread interference.

NOTE: The AK & XK output flanges can not be used with the "A" & "C" ratios on the 489 Series P.T.O.s due to mounting stud interference. Use a RA or RB rotatable flange for the XK and the RA for the AK flange.

(1) Filler block furnished with P.T.O.
(2) Input Gear Part No. 5-P-1280
(3) Input Gear Part No. 5-P-1287
(4) Input Gear Part No. 5-P-1077
(5) Input Gear Part No. 5-P-1364
(6) Input Gear Part No. 5-P-1004
(7) Input Gear Part No. 5-P-1242
(8) Input Gear Part No. 5-P-1246
(9) Input Gear Part No. 5-P-1322

912 AH

TOP SIDE ONLY

TRANSMISSION GEAR DATA:

TOP 8-Bolt Opening Gear FORWARD of Centerline

39 Teeth - SPUR

PITCH LINE TO APERTURE FACE:

.8100" (20.5700MM)

Caution: Application Approval Required for P.T.O. Output Shaft Speeds Above 2500 R.P.M.

P.T.O. Model	Inter. Torq.	Dir. Rot.	Engine % Hi	Engine % Rev	Filler Block	Adapter Assy.	Stud Kit	TOP Side P.T.O. Model	Inter. Torq.	Dir. Rot.	Engine % Hi	Engine % Rev	Filler Block	Adapter Assy.	Stud Kit
ONE SPEED - TWO GEAR - MECHANICAL SHIFT															
								880XBAHP-*3 (10)	500	Eng	69				Furnished
								880XDAHP-*3 (11)	500	Eng	81				Furnished
								880XGAHP-*3 (12)	500	Eng	88				Furnished
								880XJAHP-*3 (13)	500	Eng	104				Furnished
								880XMAHP-*3 (14)	500	Eng	122				Furnished
								880XQAHP-*3 (15)	450	Eng	142				Furnished
								880XRAHP-*3 (16)	400	Eng	168				Furnished
								880XTAHP-*3 (17)	350	Eng	217				Furnished
ONE SPEED - TWO GEAR - POWERSHIFT (AIR)															
								885XBAHP-*3 (10)	500	Eng	69				Furnished

CAUTION: Do not use geared adapters with 442 "A" and "C" ratios.

CAUTION: 660/680 Series: Applications above 1500 RPM output shaft speed, contact Chelsea Technical Service for approval.

NOTE: P.T.O.s for this application must be ordered with "L" output designator for self lube option. EX: 442XFAHP-W3LD for self lube with a 1.25" std. output.

NOTE: Pressure lube installation kits must be ordered separately. 880 Series P.T.O.s use kit 329110-1X, all other models use 329110X.

NOTE: If two or three 8 bolt P.T.O.s are to be mounted on split shaft, use stud kit 328170-190X to prevent thread interference.

NOTE: The AK & XK output flanges can not be used with the "A" & "C" ratios on the 489 Series P.T.O.s due to mounting stud interference. Use a RA or RB rotatable flange for the XK and the RA for the AK flange.

(10) Input Gear Part No. 5-P-1100
(11) Input Gear Part No. 5-P-1101
(12) Input Gear Part No. 5-P-1135
(13) Input Gear Part No. 5-P-1102
(14) Input Gear Part No. 5-P-1103
(15) Input Gear Part No. 5-P-1385
(16) Input Gear Part No. 5-P-1104
(17) Input Gear Part No. 5-P-1105

Parker Hannifin Corporation
Chelsea Products Division
Olive Branch, MS 38654 USA

941

LEFT SIDE ONLY	RIGHT SIDE ONLY
TRANSMISSION GEAR DATA: L.H. 6-Bolt Opening Gear FORWARD of Centerline 23 Teeth - SPUR **PITCH LINE TO APERTURE FACE:** 1.1250" (28.5750MM)	**TRANSMISSION GEAR DATA:** R.H. 6-Bolt Opening Gear FORWARD of Centerline 23 Teeth - SPUR **PITCH LINE TO APERTURE FACE:** 1.1250" (28.5750MM)

Caution: Application Approval Required for P.T.O. Output Shaft Speeds Above 2500 R.P.M.

LEFT Side P.T.O. Model	Inter. Torq.	Dir. Rot.	Engine % Hi	Engine % Rev	Filler Block	Adapter Assy.	Stud Kit	RIGHT Side P.T.O. Model	Inter. Torq.	Dir. Rot.	Engine % Hi	Engine % Rev	Filler Block	Adapter Assy.	Stud Kit
ONE SPEED - SINGLE GEAR - MECHANICAL SHIFT															
100XRAHX-*3 (1)	125	Opp	96				Furnished	100XRAHX-*3 (1)	125	Opp	96				Furnished
ONE SPEED - TWO GEAR - MECHANICAL SHIFT															
221XCAHX-*3	250	Eng	43		7-A-032 (2)		Furnished	221XCAHX-*3	250	Eng	43		7-A-032 (2)		Furnished
221XEAHX-*3	250	Eng	49				Furnished	221XEAHX-*3	250	Eng	49				Furnished
221XLAHX-*3	200	Eng	66				Furnished	221XLAHX-*3	200	Eng	66				Furnished
221XPAHX-*3	200	Eng	80				Furnished	221XPAHX-*3	200	Eng	80				Furnished
442XFAHX-*3 (3)	250	Eng	59				Furnished	442XFAHX-*3 (3)	250	Eng	59				Furnished
442XHAHX-*3 (4)	250	Eng	68				Furnished	442XHAHX-*3 (4)	250	Eng	68				Furnished
442XLAHX-*3 (5)	250	Eng	77				Furnished	442XLAHX-*3 (5)	250	Eng	77				Furnished
442XQAHX-*3 (5)	225	Eng	83				Furnished	442XQAHX-*3 (5)	225	Eng	83				Furnished
442XRAHX-*3 (5)	225	Eng	96				Furnished	442XRAHX-*3 (5)	225	Eng	96				Furnished
442XSAHX-*3 (5)	200	Eng	114				Furnished	442XSAHX-*3 (5)	200	Eng	114				Furnished
442XUAHX-*3 (5)	195	Eng	136				Furnished	442XUAHX-*3 (5)	135	Eng	136				Furnished
442XWAHX-*3 (5)	175	Eng	160				Furnished	442XWAHX-*3 (5)	175	Eng	160				Furnished
442XXAHX-*3 (5)	140	Eng	189				Furnished	442XXAHX-*3 (5)	140	Eng	189				Furnished
660XFAHX-*3 (6)	375	Eng	59				Furnished	660XFAHX-*3 (6)	375	Eng	59				Furnished
660XQAHX-*3 (7)	375	Eng	83				Furnished	660XQAHX-*3 (7)	375	Eng	83				Furnished
660XSAHX-*3 (8)	325	Eng	114				Furnished	660XSAHX-*3 (8)	325	Eng	114				Furnished
ONE SPEED - TWO GEAR - POWERSHIFT (AIR)															
230XAAJX-*3	250	Eng	31				Furnished	230XAAJX-*3	250	Eng	31				Furnished
230XBAJX-*3	250	Eng	41				Furnished	230XBAJX-*3	250	Eng	41				Furnished
230XDAJX-*3	250	Eng	47				Furnished	230XDAJX-*3	250	Eng	47				Furnished
230XKAJX-*3	250	Eng	64				Furnished	230XKAJX-*3	250	Eng	64				Furnished
230XQAJX-*3	250	Eng	85				Furnished	230XQAJX-*3	250	Eng	85				Furnished
230XUAJX-*3	225	Eng	135				Furnished	230XUAJX-*3	225	Eng	135				Furnished
236XDAHX-*3 (5)	250	Eng	62				Furnished	236XDAHX-*3 (5)	250	Eng	62				Furnished
236XKAHX-*3 (5)	250	Eng	80				Furnished	236XKAHX-*3 (5)	250	Eng	80				Furnished

Continued Next Page

CAUTION: Do not use 442/489 "A" or "C" ratios on Chelsea split shafts if final rotation is "ENG".

NOTE: 660/680 Series: Applications above 1500 RPM output shaft speed, contact Chelsea Technical Service for approval.

NOTE: If Ordering the 230/231 Series with the Shaft Brake Option, order the "BA" Output for Automatic Transmissions and the "BD" Output for Manual Transmissions.

(1) Gear and Shaft Kit No. KXA-2-P-565
(2) Filler block furnished with P.T.O.
(3) Input Gear Part No. 5-P-1077
(4) Input Gear Part No. 5-P-1364
(5) Input Gear Part No. 5-P-1004
(6) Input Gear Part No. 5-P-1242
(7) Input Gear Part No. 5-P-1246
(8) Input Gear Part No. 5-P-1322

941

LEFT SIDE ONLY	RIGHT SIDE ONLY
TRANSMISSION GEAR DATA: L.H. 6-Bolt Opening Gear FORWARD of Centerline 23 Teeth - SPUR **PITCH LINE TO APERTURE FACE:** 1.1250" (28.5750MM)	**TRANSMISSION GEAR DATA:** R.H. 6-Bolt Opening Gear FORWARD of Centerline 23 Teeth - SPUR **PITCH LINE TO APERTURE FACE:** 1.1250" (28.5750MM)

Caution: Application Approval Required for P.T.O. Output Shaft Speeds Above 2500 R.P.M.

LEFT Side P.T.O. Model	Inter. Torq.	Dir. Rot.	Engine % Hi	Engine % Rev	Filler Block	Adapter Assy.	Stud Kit	RIGHT Side P.T.O. Model	Inter. Torq.	Dir. Rot.	Engine % Hi	Engine % Rev	Filler Block	Adapter Assy.	Stud Kit
ONE SPEED - TWO GEAR - POWERSHIFT (AIR)															
236XQAHX-*3 (5)	250	Eng	107				Furnished	236XQAHX-*3 (5)	250	Eng	107				Furnished
236XUAHX-*3 (5)	225	Eng	123				Furnished	236XUAHX-*3 (5)	225	Eng	123				Furnished
ONE SPEED - FORWARD & REVERSE															
340XFAHX-*5 (9)	200	Eng	52	54	7-A-140 (2)		Furnished	340XFAHX-*5 (9)	200	Eng	52	54	7-A-140 (2)		Furnished
352XSAHX-*3 (5)	140	Eng	116	150			Furnished	352XSAHX-*3 (5)	140	Eng	116	150			Furnished
ONE SPEED - DUAL SHAFT															
452XSAHX-*3 (5)	140	Eng	116				Furnished	452XSAHX-*3 (5)	140	Eng	116				Furnished
GEARED ADAPTERS															
626XAHX-4AH		Eng					Furnished	626XAHX-3AH		Eng					Furnished
630XAHX-4AH		Eng					Furnished	630XAHX-3AH		Eng					Furnished
645XAHX-4AH		Eng					Furnished	645XAHX-3AH		Eng					Furnished

CAUTION: Do not use 442/489 "A" or "C" ratios on Chelsea split shafts if final rotation is "ENG".

NOTE: 660/680 Series: Applications above 1500 RPM output shaft speed, contact Chelsea Technical Service for approval.

NOTE: If Ordering the 230/231 Series with the Shaft Brake Option, order the "BA" Output for Automatic Transmissions and the "BD" Output for Manual Transmissions.

(2) Filler block furnished with P.T.O.
(5) Input Gear Part No. 5-P-1004
(9) Input Gear Part No. 5-P-581

DODGE

⚠ WARNING

FAILURE OR IMPROPER SELECTION OR IMPROPER USE OF THE PRODUCTS AND/OR SYSTEMS DESCRIBED HEREIN OR RELATED ITEMS CAN CAUSE DEATH, PERSONAL INJURY AND PROPERTY DAMAGE.

This document and other information from Parker Hannifin Corporation, its subsidiaries and authorized distributors provide product and/or system options for further investigation by users having technical expertise. It is important that you analyze all aspects of your application and review the information concerning the product or system in the current product catalog. Due to the variety of operating conditions and applications for these products or systems, the user, through its own analysis and testing, is solely responsible for making the final selection of the products and systems and assuring that all performance, safety and warning requirements of the application are met.

The products described herein, including without limitation, product features, specifications, designs, availability and pricing, are subject to change by Parker Hannifin Corporation and its subsidiaries at any time without notice.

Offer of Sale

The items described in this document are hereby offered for sale by Parker Hannifin Corporation, its subsidiaries or its authorized distributors. This offer and its acceptance are governed by the provisions stated in the "Offer of Sale".

© Copyright 2008, Parker Hannifin Corporation, All Rights Reserved

Parker Hannifin Corporation
Chelsea Products Division
Olive Branch, MS 38654 USA

Transmission Make and Model	P.T.O. Appl. Number	Number Forward Speeds	Teeth in P.T.O. Driver
AS68RC (Dodge/Sterling Cab Chassis w/Automatic)	DDG-1	6	R69
G56 (Dodge/Sterling Cab Chassis w/Manual)	DDG-2	6	L52

IMPORTANT: See Safety Information in Section 1 of the Chelsea Applications catalog HY25-3000/US.

Transmission P.T.O. Driver & Aperatures (Viewed from Rear of Transmission)

L-Left Side R-Right Side B-Bottom Side T-Top Side

For transmission not listed, contact your authorized Chelsea Distributor.

January 2008

Parker Hannifin Corporation
Chelsea Products Division
Olive Branch, MS 38654 USA

AS68RC

NO LEFT SIDE APPLICATIONS AVAILABLE | **RIGHT SIDE ONLY**

TRANSMISSION GEAR DATA:
R.H. 6-Bolt Opening Gear FORWARD of Centerline
69 Teeth - SPUR

PITCH LINE TO APERTURE FACE:
1.1200" (28.4480MM)

Caution: Application Approval Required for P.T.O. Output Shaft Speeds Above 2500 R.P.M.

P.T.O. Model	Inter. Torq.	Dir. Rot.	Engine % Hi	Engine % Rev	Filler Block	Adapter Assy.	Stud Kit	RIGHT Side P.T.O. Model	Inter. Torq.	Dir. Rot.	Engine % Hi	Engine % Rev	Filler Block	Adapter Assy.	Stud Kit
ONE SPEED - TWO GEAR - POWERSHIFT (HYDRAULIC)															
								270DAKUP-*3 (1)	208	Eng	65				Furnished
								270DBKUP-*3 (2)	159	Eng	85				Furnished
								270DDKUP-*3 (3)	138	Eng	98				Furnished
								270DKKUP-*3 (4)	102	Eng	132				Furnished
								270DQKUP-*3 (5)	91	Eng	148				Furnished

Current P.T.O.s Available for Aisin Transmission on Dodge Truck

Basic Model Number	Ratio	Output Option	% of Engine	Output Speed @1200 Engine RPM
270D	A	KUP-*3RA	65%	780
270D	B	KUP-*3RA	85%	1020
270D	D	KUP-*3RA	98%	1176
270D	K	KUP-*3RA	132%	1584
270D	Q	KUP-*3RA	148%	1776

Current Pumps Offered in the PGM20 with Bi-Directional Rotation

Pump Model Number S.A.E. "B" Shaft S.A.E. "B" Flange	Displacement in^3/rev	Displacement Gal/rev	Flow at Lowest Speed(gal/min)	Flow at Fastest Speed(gal/min)
3089210081	1.97	0.0085	6.65	15.15
3089210091	2.46	0.0106	8.31	18.91
3089210082	2.96	0.0128	9.99	22.76
3089210083	3.45	0.0149	11.65	26.52
3089210084	3.94	0.0171	13.30	30.29
3089210089	3.94	0.0171	13.30	30.29

Flows for all P.T.O. and Pump Combinations at 1200 Engine RPM - Pump Number & Flow (gal/min)

Pump Model Number	65% (A)	85% (B)	98% (D)	132% (K)	148% (Q)
3089210081	6.65	8.70	10.03	13.51	15.15
3089210091	8.31	10.86	12.52	16.87	18.91
3089210082	9.99	13.07	15.07	20.30	22.76
3089210083	11.65	15.23	17.56	23.66	26.52
3089210084	13.30	17.40	20.06	27.02	30.29
3089210089	13.30	17.40	20.06	27.02	30.29

CAUTION: It is Required that Chelsea Wiring Harness (329457X) is Used. This will Allow the ODB II Monitoring System to be Disabled while the P.T.O. System is being Operated. This will Prevent "False" Lighting of the "Check Engine" Lamp due to the Engine-P.T.O. Driven Accessories

NOTE: The P.T.O. output shaft torque ratings are based on the maximum allowable torque at the 69 tooth transmission gear of 135 lbs-ft.

NOTE: When ordering the 270 "D", the Hose Kit 329453X, Wire Harness Kit 329457X and Metric Stud Kit 328170-205X is furnished with the P.T.O. The hose, wire harness and metric stud kits are required for completing the 270D Series installation. The 329453X kit supplies the hoses for the low pressure lube, high pressure oil, and drain back oil.

(1) Input Gear Part No. 5-P-1353
(2) Input Gear Part No. 5-P-1354
(3) Input Gear Part No. 5-P-1355
(4) Input Gear Part No. 5-P-1356
(5) Input Gear Part No. 5-P-1359

Parker Hannifin Corporation
Chelsea Products Division
Olive Branch, MS 38654 USA

G56

LEFT SIDE ONLY | **NO RIGHT SIDE APPLICATIONS AVAILABLE**

TRANSMISSION GEAR DATA:
L.H. 6-Bolt Opening Gear REAR of Centerline
52 Teeth - R.H. HELIX
PITCH LINE TO APERTURE FACE:

Caution: Application Approval Required for P.T.O. Output Shaft Speeds Above 2500 R.P.M.

ONE SPEED - TWO GEAR - MECHANICAL SHIFT

LEFT Side P.T.O. Model	Inter. Torq.	Dir. Rot.	Engine % Hi	Engine % Rev	Filler Block	Adapter Assy.	Stud Kit	P.T.O. Model	Inter. Torq.	Dir. Rot.	Engine % Hi	Engine % Rev	Filler Block	Adapter Assy.	Stud Kit
442LLKHX-*6 (1)	250	Opp	67				7170-72X								
442LQKHX-*6 (1)	225	Opp	72				7170-72X								
442LRKHX-*6 (1)	225	Opp	84				7170-72X								
442LSKHX-*6 (1)	200	Opp	100				7170-72X								
442LUKHX-*6 (1)	195	Opp	119				7170-72X								
442LWKHX-*6 (1)	175	Opp	140				7170-72X								
442LXKHX-*6 (1)	140	Opp	165				7170-72X								

PGP511 Pumps w/Counter Clockwise Rotation - S.A.E. "A" Shaft/S.A.E. "A" Flange P.T.O. Shaft (REARWARD)

P.T.O. to order with this pump Option 442L*KHX-W6RC

Chelsea Pump Model	Displacement in^3/rev	Displacement Gal/rev	Continuous Pressure PSI	Max Speed RPM
CGP-P11A016-1AC	0.37	0.0016	3988	4000
CGP-P11A026-1AC	0.60	0.0026	3988	3600
CGP-P11A029-1AC	0.67	0.0029	3988	3600
CGP-P11A037-1AC	0.85	0.0037	3988	3300

PGP511 Pumps w/Clockwise Rotation - S.A.E."A" Shaft/S.A.E. "A" Flange P.T.O. Shaft (FORWARD)

P.T.O. to order with this pump Option 442L*KHX-W3RC

Chelsea Pump Model	Displacement in^3/rev	Displacement Gal/rev	Continuous Pressure PSI	Max Speed RPM
CGP-P11C016-1AC	0.37	0.0016	3988	4000
CGP-P11C026-1AC	0.60	0.0026	3988	3600
CGP-P11C029-1AC	0.67	0.0029	3988	3600
CGP-P11C037-1AC	0.85	0.0037	3988	3300

PGP517 Pumps w/Clockwise Rotation - S.A.E. "B" Shaft/S.A.E. "A" Flange P.T.O. Shaft (FORWARD)

P.T.O. to order with this pump Option 442L*KHX-W3RD

Chelsea Pump Model	Displacement in^3/rev	Displacement Gal/rev	Continuous Pressure PSI	Max Speed RPM
CGP-P17C050-2AN	1.16	0.0050	3625	3300
CGP-P17C066-2AN	1.52	0.0066	3625	3100
CGP-P17C087-2AN	2.01	0.0087	3625	3100
CGP-P17C100-2AN	2.31	0.0100	3625	3000
CGP-P17C137-2AN	3.16	0.0137	2900	2600

CAUTION: Chelsea Wiring Harness 329460X Must be Used to Complete the Installation (Order Separately). This will Allow the ODB II Monitoring System to be Disabled While the P.T.O. System is being Operated.

NOTE: P.T.O.s are shown in the Standard Arrangements with the P.T.O. Housing "Bulge" Down and the Output Shaft to the Rear of the Vehicle. Other Arrangements may be needed to Install P.T.O./Pump Applications due to the Transmission Cross Member Support Interfering with Pump Installations to the Rear of the Vehicle.

NOTE: P.T.O.s will not fit on 4x4 Dodge/Sterling 4500/5500 Series Vehicles due to Frontwheel Driveshaft Interference.

(1) Input Gear Part No. 5-P-1343

Notes

EATON FULLER

⚠ WARNING

FAILURE OR IMPROPER SELECTION OR IMPROPER USE OF THE PRODUCTS AND/OR SYSTEMS DESCRIBED HEREIN OR RELATED ITEMS CAN CAUSE DEATH, PERSONAL INJURY AND PROPERTY DAMAGE.

This document and other information from Parker Hannifin Corporation, its subsidiaries and authorized distributors provide product and/or system options for further investigation by users having technical expertise. It is important that you analyze all aspects of your application and review the information concerning the product or system in the current product catalog. Due to the variety of operating conditions and applications for these products or systems, the user, through its own analysis and testing, is solely responsible for making the final selection of the products and systems and assuring that all performance, safety and warning requirements of the application are met.

The products described herein, including without limitation, product features, specifications, designs, availability and pricing, are subject to change by Parker Hannifin Corporation and its subsidiaries at any time without notice.

Offer of Sale

The items described in this document are hereby offered for sale by Parker Hannifin Corporation, its subsidiaries or its authorized distributors. This offer and its acceptance are governed by the provisions stated in the "Offer of Sale".

© Copyright 2008, Parker Hannifin Corporation, All Rights Reserved

Parker Hannifin Corporation
Chelsea Products Division
Olive Branch, MS 38654 USA

Transmission/Chelsea Power Take-Offs Torque Capacities

Eaton Transmissions has recently reviewed the maximum allowable torque ratings on the HD transmissions P.T.O. driver gear. These limits are the maximum allowable torque ratings that are not to be exceeded under any operating conditions. The following Eaton transmissions are affected by this new torque limit, all FR/FRO and all RT/RTO/RTLO.

1. For all FR/FRO transmissions the maximum rating for the transmission P.T.O. gear is 500 Ft-lbs.
2. For all RT/RTO/RTLO transmission the maximum rating for the transmission P.T.O. gear is 350 Ft-lbs.
3. RT/RTO/RTLO transmissions can be upgraded to allow for 500 Ft-lbs by using a roller type input bearing, Eaton part number 4301417.

The following Chelsea application pages now reflect this new Eaton established torque rating. Listed in the P.T.O. Intermittent Torque Rating Column (Inter. Torq.) is the P.T.O output torque limit stated as to not exceed the maximum transmission P.T.O. gear torque requirements. On the FR/FRO pages the P.T.O. intermittent torque rating will not exceed the transmission gear rating of 500 Ft-lbs. For RT/RTO/RTLO pages the P.T.O. intermittent torque limit rating will not exceed the transmission gear rating of 350 Ft-lbs.

FR/FRO Application Pages

FLR-88	FLR-90	FLR-91

RT/RTO/RTLO Application Pages

FLR-34	FLR-37	FLR-43	FLR-46	FLR-49	FLR-59	FLR-80	FLR-85	FLR-99
FLR-35	FLR-38	FLR-44	FLR-47	FLR-57	FLR-61	FLR-81	FLR-87	
FLR-36	FLR-39	FLR-45	FLR-48	FLR-58	FLR-64	FLR-82	FLR-98	

Using the Torque Limit Charts

- The new published intermittent torque values listed on each application page listed in the charts above are calculated as not to exceed the Eaton transmission torque limit. For the FR/FRO a transmission gear rating of 500 Ft-lbs. And for the RT/RTO/RTLO transmissions a gear rating of 350 Ft-lbs.

- The torque charts on the following pages will help you determine the correct torque requirements for your application. Listed are the standard Chelsea torque values for each series/speed ratio and the new values under the Eaton guidelines for the FR/FRO and RT/RTO/RTLO HD transmissions.

- If you do have a RT/RTO/RTLO transmission with the roller type input bearing (Eaton part number 4301417) the chart on the following pages will provide you with the torque values for each P.T.O. Series/speed ratio.

- Continuous torque ratings are also listed for Series and P.T.O. speed ratios. In some cases these values will be the same as the intermittent value, which is because the new continuous rating is still below the Chelsea standard continuous rating and does not exceed the transmission drive gear rating.

RT/RTO/RTLO Torque Charts

FLR-10	FLR-16	FLR-26	FLR-34	FLR-43	FLR-49	FLR-59	FLR-85
FLR-11	FLR-17	FLR-27	FLR-35	FLR-44	FLR-50	FLR-63	FLR-87
FLR-12	FLR-18	FLR-28	FLR-36	FLR-45	FLR-51	FLR-64	FLR-98
FLR-13	FLR-19	FLR-29	FLR-37	FLR-46	FLR-52	FLR-80	FLR-99
FLR-14	FLR-22	FLR-30	FLR-38	FLR-47	FLR-57	FLR-81	
FLR-15	FLR-23	FLR-32	FLR-39	FLR-48	FLR-58	FLR-82	

6-BOLT OPENING W/ 45 TEETH P.T.O. DRIVER GEAR (Right Side)

Standard Chelsea Ratings				Transmission P.T.O. Gear 350 Ft-lb Torque Capacity		Transmission P.T.O. Gear 500 Ft-lb Torque Capacity	
P.T.O. MODEL	RATIO	INT. TQ.	CONT.	INT. TQ.	CONT. TQ.	INT. TQ.	CONT. TQ.
100	R	125	88	125	88	125	88
221	C	250	175	250	175	250	175
	E	250	175	250	175	250	175
	L	200	140	200	140	200	140
	P	200	140	200	140	200	140
230	A	250	175	250	175	250	175
	B	250	175	250	175	250	175
	D	250	175	250	175	250	175
	K	250	175	250	175	250	175
	Q	250	175	212	175	250	175
	U	225	158	132	132	188	158
236	D	250	175	250	175	250	175
	K	250	175	224	175	250	175
	Q	250	175	166	166	238	175
	U	225	158	145	145	208	158
260	A	250	175	250	175	250	175
340	F	200	140	200	140	200	140
352	S	140	98	140	98	140	98
442	A	250	175	250	175	250	175
	C	250	175	250	175	250	175
	F	250	175	250	175	250	175
	H	250	175	250	175	250	175
	L	250	175	233	175	250	175
	Q	225	158	216	158	225	158
	R	200	140	187	140	200	140
	S	200	140	156	140	200	140
	U	195	137	132	132	188	137
	W	175	122	112	112	160	123
	X	140	98	94	94	135	98
452	S	140	98	140	98	140	98
660	F	375	263	301	263	375	263
	Q	375	263	216	216	308	216
	S	325	228	156	156	224	160

Shaded Area Indicates Torque Ratings BELOW Chelsea Standard Ratings for Intermittent or Continuous Operations.

Parker Hannifin Corporation
Chelsea Products Division
Olive Branch, MS 38654 USA

RT/RTO/RTLO Torque Charts

8-BOLT OPENING W/ 47 TEETH P.T.O. DRIVER GEAR (Bottom)							
Standard Chelsea Ratings				Transmission P.T.O. Gear 350 Ft-lb Torque Capacity		Transmission P.T.O. Gear 500 Ft-lb Torque Capacity	
P.T.O. MODEL	RATIO	INT. TQ.	CONT. TQ.	INT. TQ.	CONT. TQ.	INT. TQ.	CONT. TQ.
100	R	125	88	125	88	125	88
221	C	250	175	250	175	250	175
	E	250	175	250	175	250	175
	L	200	140	200	140	200	140
	P	200	140	200	140	200	140
230	A	250	175	250	175	250	175
	B	250	175	250	175	250	175
	D	250	175	250	175	250	175
	K	250	175	250	175	250	175
	Q	250	175	203	175	250	175
	U	225	158	126	126	180	158
236	D	250	175	250	175	250	175
	K	250	175	215	175	250	175
	Q	250	175	160	160	227	175
	U	225	158	139	139	199	158
260	A	250	175	250	175	250	175
352	S	140	98	140	98	140	98
489/442	A	250	175	250	175	250	175
	C	250	175	250	175	250	175
	F	250	175	250	175	250	175
	H	250	175	250	175	250	175
	L	250	175	222	175	250	175
	Q	225	158	206	158	225	158
	R	225	158	178	158	225	158
	S	200	140	150	140	200	140
	U	195	137	126	126	180	137
	W	175	123	107	107	153	123
	X	140	98	91	91	135	98
680	F	375	263	288	263	375	263
	Q	375	263	206	206	295	207
	S	325	228	150	150	214	150
812	K	400	280	268	268	382	280
823/863 880/885	B	500	350	423	350	500	350
880	D	500	350	357	350	500	350
	G	500	350	329	329	470	350
823/880 885	J	500	350	279	279	399	350
823/880 885	M	500	350	238	238	340	340
880	Q	500	350	203	203	290	290
823/880	R	400	280	172	172	246	246
880	T	350	280	134	134	191	191
823	T	350	245	142	142	203	203

Shaded Area Indicates Torque Ratings BELOW Chelsea Standard Ratings for Intermittent or Continuous Operations.

Parker Chelsea

Parker Hannifin Corporation
Chelsea Products Division
Olive Branch, MS 38654 USA

FR/FRO Torque Charts

FLR-88, FLR-90, FLR-91

6-BOLT OPENING W/ 45 TEETH P.T.O. DRIVER GEAR (Right Side)					
Standard Chelsea Ratings				Transmission P.T.O. Gear 500 Ft-lb Torque Capacity	
P.T.O. MODEL	RATIO	INT. TQ.	CONT. TQ.	INT. TQ.	CONT. TQ.
230	A	250	175	250	175
	B	250	175	250	175
	D	250	175	250	175
	K	250	175	250	175
	Q	250	175	250	175
	U	225	158	188	158
236	D	250	175	250	175
	K	250	175	250	175
352	S	140	98	140	98
442	A	250	175	250	175
	C	250	175	250	175
	F	250	175	250	175
	H	250	175	250	175
	L	250	175	250	175
	Q	225	158	225	158
	R	225	158	225	158
	S	200	140	200	140
660	F	375	263	375	263
	Q	375	263	308	216
	S	325	228	224	160

Shaded Area Indicates Torque Ratings BELOW Chelsea Standard Ratings for Intermittent or Continuous Operations.

Parker Chelsea

Parker Hannifin Corporation
Chelsea Products Division
Olive Branch, MS 38654 USA

FR/FRO Torque Charts

8-BOLT OPENING W/ 47 TEETH P.T.O. DRIVER GEAR (Bottom)					
Standard Chelsea Ratings				Transmission P.T.O. Gear 500 Ft-lb Torque Capacity	
P.T.O. MODEL	RATIO	INT. TQ.	CONT. TQ.	INT. TQ.	CONT. TQ.
100	R	125	88	125	88
221	C	250	175	250	175
	E	250	175	250	175
	L	200	140	200	140
	P	200	140	200	140
230	A	250	175	250	175
	B	250	175	250	175
	D	250	175	250	175
	K	250	175	250	175
	Q	250	175	250	175
	U	225	158	180	158
352	S	140	98	140	98
489	A	250	175	250	175
	C	250	175	250	175
	F	250	175	250	175
	H	250	175	250	175
	L	250	175	250	175
	Q	225	158	225	158
	R	225	158	225	158
	S	200	140	200	140
	U	195	137	180	137
	W	175	123	153	123
680	F	375	263	375	263
	Q	375	263	295	207
	S	325	228	214	149
863/880	B	500	350	500	350
885	D	500	350	500	350
	G	500	350	470	350
880/885	J	500	350	399	350
	M	500	350	340	340
	Q	450	350	290	290
880	R	400	280	246	246
	T	350	245	191	191

Shaded Area Indicates Torque Ratings BELOW Chelsea Standard Ratings for Intermittent or Continuous Operations.

Parker Chelsea

Parker Hannifin Corporation
Chelsea Products Division
Olive Branch, MS 38654 USA

Notes

Parker Hannifin Corporation
Chelsea Products Division
Olive Branch, MS 38654 USA

Transmission Make and Model	P.T.O. Appl. Number	Number Forward Speeds	Teeth in P.T.O. Driver
AT-1202	FLR-60	2	B30-T30
EH8-E306A-UP	FLR-92	6	L48-R48
F-5405-DM3	FLR-97	5	L39-R39
F-5405B-DM3 (6 Speed from Brazil, w/ 6th gear locked out electronically)	FLR-92	5	L48-R48
F-6405B-DM3	FLR-57	5	B47-R45
F-6406N-ASW	FLR-97	6	L39-R39
F-6406N-ASX	FLR-97	6	L39-R39
F-6406N-AW3	FLR-97	6	L39-R39
F-8406N-ASW	FLR-97	6	L39-R39
FM-14D310B-LST	FLR-34	10	B47-R45
FM-15D310B-LST	FLR-34	10	B47-R45
FO-16D313E-LEP	FLR-58	13	B47-R45
FO-5406B-DM3	FLR-92	6	L48-R48
FO-6406A-ASW	FLR-92	6	L48-R48
FO-6406A-ASX	FLR-92	6	L48-R48
FO-6406A-AW3	FLR-92	6	L48-R48
FO-6406B-DM3	FLR-92	6	L48-R48
FO-6406N-AW3	FLR-97	6	L39-R39
FO-8406A-ASW	FLR-92	6	L48-R48
FO-8406A-ASX	FLR-92	6	L48-R48
FO-8406A-AW3	FLR-92	6	L48-R48
FOM-16D313E-LEP	FLR-58	13	B47-R45
FR-11210B	FLR-90	10	B47-R45
FR-12210B	FLR-90	10	B47-R45
FR-13210B	FLR-90	10	B47-R45
FR-14210B	FLR-90	10	B47-R45
FR-15210B	FLR-90	10	B47-R45
FR-9210	FLR-90	10	B47-R45
FRLO-14410C	FLR-95	10	L51-R51
FRLO-14410C-T2	FLR-95	10	L51-R51
FRLO-15410C	FLR-95	10	L51-R51
FRLO-15410C-T2	FLR-95	10	L51-R51
FRLO-16410C	FLR-95	10	L51-R51
FRLO-16410C-T2	FLR-95	10	L51-R51
FRO-11210B	FLR-91	10	B47-R45
FRO-11210C	FLR-88	10	B47-R45

IMPORTANT: See Safety Information in Section I of the Chelsea Applications catalog HY25-3000/US.

Transmission P.T.O. Driver & Aperatures (Viewed from Rear of Transmission)

L-Left Side R-Right Side B-Bottom Side T-Top Side

For transmission not listed, contact your authorized Chelsea Distributor.

January 2008

Parker Hannifin Corporation
Chelsea Products Division
Olive Branch, MS 38654 USA

EATON/FULLER TRANSMISSION INDEX

Transmission Make and Model	P.T.O. Appl. Number	Number Forward Speeds	Teeth in P.T.O. Driver
FRO-12210B	FLR-91	10	B47-R45
FRO-12210C	FLR-88	10	B47-R45
FRO-13210B	FLR-91	10	B47-R45
FRO-13210C	FLR-88	10	B47-R45
FRO-14210B	FLR-91	10	B47-R45
FRO-14210C	FLR-88	10	B47-R45
FRO-15210B	FLR-91	10	B47-R45
FRO-15210C	FLR-88	10	B47-R45
FRO-16210B	FLR-91	10	B47-R45
FRO-16210C	FLR-88	10	B47-R45
FRO-16210R	FLR-88	10	B47-R45
FRO-17210C	FLR-88	10	B47-R45
FRO-18210C	FLR-88	10	B47-R45
FS-4205A	FLR-78	5	L28-R28
FS-4205B	FLR-79	5	L28-R28
FS-5306A	FLR-68	6	L38-R38
FS-5406A	FLR-68	6	L38-R38
FS-5406N	FLR-97	6	L39-R39
FS-6106A	FLR-67	6	L50-R50
FS-6205A	FLR-69	5	L39-R39
FS-6205B	FLR-70	5	L41-R41
FS-6206A	FLR-68	6	L38-R38
FS-6305A	FLR-69	5	L39-R39
FS-6305B	FLR-70	5	L41-R41
FS-6306A	FLR-68	6	L38-R38
FS-6406A	FLR-68	6	L38-R38
FS-6406N	FLR-97	6	L39-R39
FS-8206A	FLR-67	6	L50-R50
FS-8209A (Australia)	FLR-84	9	L23
FS-8406A	FLR-67	6	L50-R50
FSB-5406B	FLR-94	6	L38-R38
FSB-6406B	FLR-94	6	L38-R38
FSO-6406A (Eaton Brazil)	FLR-92	6	L48-R48
FSO-8406A (Eaton Brazil)	FLR-92	6	L48-R48
RT-11609A (Thrushaft option use AT mounting)	FLR-34	8+1	B47-R45
RT-11709H (Thrushaft option use AU mounting)	FLR-34	9	B47-R45

IMPORTANT: See Safety Information in Section 1 of the Chelsea Applications catalog HY25-3000/US.

Transmission P.T.O. Driver & Aperatures (Viewed from Rear of Transmission)

L-Left Side R-Right Side B-Bottom Side T-Top Side

For transmission not listed, contact your authorized Chelsea Distributor.

January 2008

Parker Hannifin Corporation
Chelsea Products Division
Olive Branch, MS 38654 USA

Transmission Make and Model	P.T.O. Appl. Number	Number Forward Speeds	Teeth in P.T.O. Driver
RT-12609A (Thrushaft option use AT mounting)	FLR-34	9	B47-R45
RT-12709A	FLR-34	9	B47-R45
RT-12710B (Thrushaft option use AU mounting)	FLR-34	10	B47-R45
RT-13609A (Thrushaft option use AT mounting)	FLR-34	9	B47-R45
RT-13709H (Thrushaft option use AU mounting)	FLR-34	9	B47-R45
RT-13710B (Thrushaft option use AU mounting)	FLR-34	10	B47-R45
RT-14609A (Thrushaft option use AU mounting)	FLR-34	8+1	B47-R45
RT-14709A	FLR-34	9	B47-R45
RT-14710B (Thrushaft option use AU mounting)	FLR-34	10	B47-R45
RT-14710B-AS2	FLR-34	10	B47-R45
RT-14715 (Thrushaft option use BD mounting)	FLR-34	15	B47-R45
RT-14910B-AS2	FLR-34	10	B47-R45
RT-14915	FLR-34	15	B47-R45
RT-15715	FLR-34	15	B47-R45
RT-6609A	FLR-66	9	B33-R33
RT-6610	FLR-40	10	B33-R33
RT-6613	FLR-40	13	B33-R33
RT-7608LL	FLR-66	8+2	B33-R33
RT-7609 (ENGLAND)	FLR-40	9	B33-R33
RT-8608L	FLR-64	8	B47-R45
RT-8609	FLR-66	9	B33-R33
RT-8709B	FLR-34	9	B47-R45
RT-8908LL	FLR-34	8+2	B47-R45
RT-9509C (ENGLAND)	FLR-34	9	B47-R45
RT-9710B	FLR-34	10	B47-R45
RT-9710B (Thrushaft option use AU mounting)	FLR-34	10	B47-R45
RTA-14710B-AS	FLR-34	10	B47-R45
RTAO-10710B-AC	FLR-57	10	B47-R45
RTAO-10710B-AS	FLR-57	10	B47-R45
RTAO-10710C-AC	FLR-58	10	B47-R45
RTAO-10710C-AS	FLR-58	10	B47-R45
RTAO-12710B-AC	FLR-57	10	B47-R45
RTAO-12710B-AS	FLR-57	10	B47-R45
RTAO-12710C-AC	FLR-58	10	B47-R45
RTAO-12710C-AS	FLR-58	10	B47-R45
RTAO-14710B-AC	FLR-57	10	B47-R45

IMPORTANT: See Safety Information in Section I of the Chelsea Applications catalog HY25-3000/US.

Transmission P.T.O. Driver & Aperatures (Viewed from Rear of Transmission)

L-Left Side R-Right Side B-Bottom Side T-Top Side

For transmission not listed, contact your authorized Chelsea Distributor.

January 2008

Parker Hannifin Corporation
Chelsea Products Division
Olive Branch, MS 38654 USA

EATON/FULLER TRANSMISSION INDEX

Transmission Make and Model	P.T.O. Appl. Number	Number Forward Speeds	Teeth in P.T.O. Driver
RTAO-14710B-AC	FLR-57	10	B47-R45
RTAO-14710B-AS	FLR-57	10	B47-R45
RTAO-14710C-AC	FLR-58	10	B47-R45
RTAO-14710C-AS	FLR-58	10	B47-R45
RTAO-16710B-AC (Australia)	FLR-57	10	B47-R45
RTAO-16710B-AC	FLR-57	10	B47-R45
RTAO-16710B-AS	FLR-57	10	B47-R45
RTAO-16710C-AS	FLR-58	10	B47-R45
RTF-11609A	FLR-34	9	B47-R45
RTF-12609A	FLR-34	9	B47-R45
RTF-12709H	FLR-34	9	B47-R45
RTF-12710B	FLR-34	10	B47-R45
RTF-13609A	FLR-34	9	B47-R45
RTF-13709H	FLR-34	9	B47-R45
RTF-13710B	FLR-34	10	B47-R45
RTF-14609A	FLR-34	9	B47-R45
RTF-14709H	FLR-34	9	B47-R45
RTF-14710B	FLR-34	10	B47-R45
RTF-14715	FLR-34	15	B47-R45
RTF-14915	FLR-34	15	B47-R45
RTF-15715	FLR-34	15	B47-R45
RTF-8908LL (Australia)	FLR-34	8	B47-R45
RTL-13710B	FLR-34	10	B47-R45
RTL-14710B	FLR-34	10	B47-R45
RTLO-11610B-T2	FLR-34	10	B47-R45
RTLO-12610B	FLR-34	10	B47-R45
RTLO-12610B-T2	FLR-34	10	B47-R45
RTLO-12713A	FLR-58	13	B47-R45
RTLO-12913A (Australia)	FLR-58	13	B47-R45
RTLO-13610B	FLR-34	10	B47-R45
RTLO-13610B-T2	FLR-34	10	B47-R45
RTLO-14610A	FLR-34	10	B47-R45
RTLO-14610B	FLR-34	10	B47-R45
RTLO-14610B-T2	FLR-34	10	B47-R45
RTLO-14613B	FLR-34	13	B47-R45
RTLO-14713A	FLR-58	13	B47-R45

IMPORTANT: See Safety Information in Section 1 of the Chelsea Applications catalog HY25-3000/US.

Transmission P.T.O. Driver & Aperatures (Viewed from Rear of Transmission)

L-Left Side R-Right Side B-Bottom Side T-Top Side

For transmission not listed, contact your authorized Chelsea Distributor.

January 2008

Parker Hannifin Corporation
Chelsea Products Division
Olive Branch, MS 38654 USA

Transmission Make and Model	P.T.O. Appl. Number	Number Forward Speeds	Teeth in P.T.O. Driver
RTLO-14713A-T2	FLR-58	13	B47-R45
RTLO-14718B	FLR-58	18	B47-R45
RTLO-14718B-T2	FLR-58	18	B47-R45
RTLO-14913-T2 (Australia)	FLR-58	13	B47-R45
RTLO-14913A (Australia)	FLR-58	13	B47-R45
RTLO-14918A-AS2	FLR-58	18	B47-R45
RTLO-14918A-AS3	FLR-58	18	B47-R45
RTLO-14918B	FLR-58	18	B47-R45
RTLO-14918B-AS	FLR-58	18	B47-R45
RTLO-15610B-T2	FLR-34	10	B47-R45
RTLO-16610B	FLR-34	10	B47-R45
RTLO-16610B-T2	FLR-34	10	B47-R45
RTLO-16713A	FLR-58	13	B47-R45
RTLO-16713A-T2	FLR-58	13	B47-R45
RTLO-16718B	FLR-58	18	B47-R45
RTLO-16718B-T2	FLR-58	18	B47-R45
RTLO-16913-T2 (Australia)	FLR-58	13	B47-R45
RTLO-16913A (Australia)	FLR-58	13	B47-R45
RTLO-16913L-LHP	FLR-58	13	B47-R45
RTLO-16913LHS-D	FLR-58	13	B47-R45
RTLO-16918A-AS2	FLR-58	18	B47-R45
RTLO-16918A-AS3	FLR-58	18	B47-R45
RTLO-16918B	FLR-58	18	B47-R45
RTLO-16918B-AS	FLR-58	18	B47-R45
RTLO-17610B	FLR-34	10	B47-R45
RTLO-17610B-T2	FLR-34	10	B47-R45
RTLO-18610B	FLR-34	10	B47-R45
RTLO-18718B	FLR-58	18	B47-R45
RTLO-18718B-T2	FLR-58	18	B47-R45
RTLO-18913A	FLR-58	13	B47-R45
RTLO-18913A-T2	FLR-58	13	B47-R45
RTLO-18918A-AS2	FLR-58	18	B47-R45
RTLO-18918B	FLR-58	18	B47-R45
RTLO-18918B-AS	FLR-58	18	B47-R45
RTLO-20913A	FLR-58	13	B47-R45
RTLO-20918A-AS2	FLR-58	18	B47-R45

IMPORTANT: See Safety Information in Section I of the Chelsea Applications catalog HY25-3000/US.

Transmission P.T.O. Driver & Aperatures (Viewed from Rear of Transmission)

L-Left Side R-Right Side B-Bottom Side T-Top Side

For transmission not listed, contact your authorized Chelsea Distributor.

January 2008

Parker Hannifin Corporation
Chelsea Products Division
Olive Branch, MS 38654 USA

EATON/FULLER TRANSMISSION INDEX

Transmission Make and Model	P.T.O. Appl. Number	Number Forward Speeds	Teeth in P.T.O. Driver
RTLO-20918B	FLR-58	18	B47-R45
RTLO-20918B-AS	FLR-58	18	B47-R45
RTLO-22918A-AS2	FLR-58	18	B47-R45
RTLO-22918A-AS3	FLR-58	18	B47-R45
RTLO-22918A-AS3	FLR-58	18	B47-R45
RTLOM-16913L-LH	FLR-58	13	B47-R45
RTO-10710B-AS2	FLR-57	10	B47-R45
RTO-10910B-AS2	FLR-57	10	B47-R45
RTO-10910B-AS3	FLR-57	10	B47-R45
RTO-10910B-DM2 (UltraShift)	FLR-100	10	B47-R45
RTO-10910B-DM3	FLR-100	10	B47-R45
RTO-11709MLL	FLR-58	9+2	B47-R45
RTO-11908LL	FLR-57	8+2	B47-R45
RTO-11909ALL	FLR-58	11	B47-R45
RTO-11909MLL	FLR-58	9	B47-R45
RTO-12710B-AS2	FLR-57	10	B47-R45
RTO-12910B-AS2	FLR-57	10	B47-R45
RTO-12910B-AS2	FLR-57	10	B47-R45
RTO-12910B-AS3	FLR-57	10	B47-R45
RTO-12910B-DM2 (UltraShift)	FLR-100	10	B47-R45
RTO-12910B-DM3	FLR-100	10	B47-R45
RTO-14609B (Thrushaft option use AU mounting)	FLR-58	9	B47-R45
RTO-14613	FLR-34	13	B47-R45
RTO-14709MLL	FLR-58	9+2	B47-R45
RTO-14710B-AS2	FLR-57	10	B47-R45
RTO-14908LL	FLR-57	8+2	B47-R45
RTO-14909ALL	FLR-58	11	B47-R45
RTO-14910B-AS2	FLR-57	10	B47-R45
RTO-14910B-AS3	FLR-57	10	B47-R45
RTO-14910B-DM2 (UltraShift)	FLR-100	10	B47-R45
RTO-14910B-DM3	FLR-100	10	B47-R45
RTO-14910C-AS2	FLR-58	10	B47-R45
RTO-14910C-AS3	FLR-58	10	B47-R45
RTO-14915	FLR-59	15	B47-R45
RTO-16710B	FLR-57	10	B47-R45
RTO-16710B-AS2	FLR-57	10	B47-R45

IMPORTANT: See Safety Information in Section 1 of the Chelsea Applications catalog HY25-3000/US.

Transmission P.T.O. Driver & Aperatures (Viewed from Rear of Transmission)

L-Left Side R-Right Side B-Bottom Side T-Top Side

For transmission not listed, contact your authorized Chelsea Distributor.

January 2008

Parker Hannifin Corporation
Chelsea Products Division
Olive Branch, MS 38654 USA

Transmission Make and Model	P.T.O. Appl. Number	Number Forward Speeds	Teeth in P.T.O. Driver
RTO-16710C-AS2	FLR-58	10	B47-R45
RTO-16908LL	FLR-57	8+2	B47-R45
RTO-16909ALL	FLR-58	11	B47-R45
RTO-16910B-AS2	FLR-57	10	B47-R45
RTO-16910B-AS3	FLR-57	10	B47-R45
RTO-16910B-DM2 (UltraShift)	FLR-100	10	B47-R45
RTO-16910B-DM3	FLR-100	10	B47-R45
RTO-16910C-AS2	FLR-58	10	B47-R45
RTO-16910C-AS3	FLR-58	10	B47-R45
RTO-16915	FLR-59	15	B47-R45
RTO-18910B-AS2	FLR-58	10	B47-R45
RTO-18910B-AS3	FLR-58	10	B47-R45
RTO-6610	FLR-41	10	B33-R33
RTO-6613	FLR-41	13	B33-R33
RTO-7613	FLR-40	13	B33-R33
RTO-909B	FLR-58	8+1	B47-R45
RTO-9513	FLR-34	13	B47-R45
RTOC-16909A (Convertible 9 to 13 Speed)	FLR-58	9	B47-R45
RTOF-12913A (Australia)	FLR-58	13	B47-R45
RTX-11609B	FLR-58	9	B47-R45
RTX-11609P	FLR-57	9	B47-R45
RTX-11609R (Thrushaft option use AT mounting)	FLR-57	8+1	B47-R45
RTX-12609B (Thrushaft option use AT mounting)	FLR-58	9	B47-R45
RTX-12609P	FLR-57	9	B47-R45
RTX-12609R	FLR-57	9	B47-R45
RTX-12709H	FLR-58	9	B47-R45
RTX-12710C (Thrushaft option use AU mounting)	FLR-58	10	B47-R45
RTX-13609B (Thrushaft option use AT mounting)	FLR-58	9	B47-R45
RTX-13609B	FLR-58	9	B47-R45
RTX-13709H	FLR-58	9	B47-R45
RTX-13710B	FLR-57	10	B47-R45
RTX-13710B	FLR-57	10	B47-R45
RTX-13710C (Thrushaft option use AU mounting)	FLR-58	10	B47-R45
RTX-14609B	FLR-58	9	B47-R45
RTX-14609R (Thrushaft option use AU mounting)	FLR-57	8+1	B47-R45
RTX-14708LL	FLR-57	8	B47-R45

IMPORTANT: See Safety Information in Section I of the Chelsea Applications catalog HY25-3000/US.

Transmission P.T.O. Driver & Aperatures (Viewed from Rear of Transmission)

L-Left Side R-Right Side B-Bottom Side T-Top Side

For transmission not listed, contact your authorized Chelsea Distributor.

January 2008

Parker Hannifin Corporation
Chelsea Products Division
Olive Branch, MS 38654 USA

EATON/FULLER TRANSMISSION INDEX

Transmission Make and Model	P.T.O. Appl. Number	Number Forward Speeds	Teeth in P.T.O. Driver
RTX-14709H	FLR-58	9	B47-R45
RTX-14710B (Thrushaft option use AU mounting)	FLR-57	10	B47-R45
RTX-14710C (Thrushaft option use AU mounting)	FLR-58	10	B47-R45
RTX-14715	FLR-59	15	B47-R45
RTX-15715	FLR-59	15	B47-R45
RTX-16709B	FLR-58	9	B47-R45
RTX-16709H	FLR-58	9	B47-R45
RTX-16710B	FLR-57	10	B47-R45
RTX-16710X	FLR-58	10	B47-R45
T-14607A	FLR-75	7	L78-R78
T-14607B	FLR-75	7	L78-R78
TX-14607B	FLR-77	7	L78-R78

FM-14D310B-LST	RT-12709A	RT-14609A	RT-14910B-AS2	RT-9509C	RTF-12609A	RTF-13710B	RTF-14915
FM-15D310B-LST	RT-12710B	RT-14709A	RT-14915	RT-9710B	RTF-12709H	RTF-14609A	RTF-15715
RT-11609A	RT-13609A	RT-14710B	RT-15715	RT-9710B	RTF-12710B	RTF-14709H	RTF-8908LL
RT-11709H	RT-13709H	RT-14710B-AS2	RT-8709B	RTA-14710B-AS	RTF-13609A	RTF-14710B	RTL-13710B
RT-12609A	RT-13710B	RT-14715	RT-8908LL	RTF-11609A	RTF-13709H	RTF-14715	RTL-14710B

BOTTOM SIDE ONLY

TRANSMISSION GEAR DATA:
BOT 8-Bolt Opening Gear FORWARD of Centerline
47 Teeth - SPUR
PITCH LINE TO APERTURE FACE:
.8050" (20.4500MM)

RIGHT SIDE ONLY

TRANSMISSION GEAR DATA:
R.H. 6-Bolt Opening Gear FORWARD of Centerline
45 Teeth - SPUR
PITCH LINE TO APERTURE FACE:
1.0850" (27.5600MM)

Caution: Application Approval Required for P.T.O. Output Shaft Speeds Above 2500 R.P.M.

BOTTOM Side P.T.O. Model	Inter. Torq.	Dir. Rot.	Engine % Hi	Engine % Rev	Filler Block	Adapter Assy.	Stud Kit	RIGHT Side P.T.O. Model	Inter. Torq.	Dir. Rot.	Engine % Hi	Engine % Rev	Filler Block	Adapter Assy.	Stud Kit
ONE SPEED - SINGLE GEAR - MECHANICAL SHIFT															
100XRAHX-*3 (1)	125	Eng	137			328481X	Furnished	100XRAHX-*3 (1)	125	Opp	131			329138X	Furnished
812XKAHX-*3	268	Eng	91				Furnished								
ONE SPEED - TWO GEAR - MECHANICAL SHIFT															
221ZCAHX-*3	250	Opp	61		7-A-032(P)(2)	328564X	Furnished	221XCAHX-*3	250	Opp	58		7-A-032 (2)		Furnished
221ZEAHX-*3	250	Opp	70			328564X	Furnished	221XEAHX-*3	250	Opp	67				Furnished
221ZLAHX-*3	200	Opp	95			328564X	Furnished	221XLAHX-*3	200	Opp	91				Furnished
221ZPAHX-*3	200	Opp	114			328564X	Furnished	221XPAHX-*3	200	Opp	110				Furnished
442ZAAHX-*3 (4)	250	Opp	54			328564X	Furnished	442XAAHX-*3 (4)	250	Opp	51				Furnished
442ZCAHX-*3 (5)	250	Opp	69			328564X	Furnished	442XBAHX-*3 (3)	250	Eng	51			REQUIRED	Furnished
442ZFAHX-*3 (6)	250	Opp	85			328564X	Furnished	442XCAHX-*3 (5)	250	Opp	66				Furnished
442ZHAHX-*3 (7)	250	Opp	99			328564X	Furnished	442XFAHX-*3 (6)	250	Opp	81				Furnished
442ZLAHX-*3 (8)	222	Opp	110			328564X	Furnished	442XHAHX-*3 (7)	250	Opp	94				Furnished
442ZQAHX-*3 (8)	206	Opp	118			328564X	Furnished	442XLAHX-*3 (8)	233	Opp	105				Furnished
442ZRAHX-*3 (8)	178	Opp	137			328564X	Furnished	442XQAHX-*3 (8)	216	Opp	113				Furnished
442ZSAHX-*3 (8)	150	Opp	163			328564X	Furnished	442XRAHX-*3 (8)	187	Opp	131				Furnished
442ZUAHX-*3 (8)	126	Opp	194			328564X	Furnished	442XSAHX-*3 (8)	156	Opp	156				Furnished
442ZWAHX-*3 (8)	107	Opp	229			328564X	Furnished	442XUAHX-*3 (8)	132	Opp	186				Furnished
442ZXAHX-*3 (8)	91	Opp	271			328564X	Furnished	442XWAHX-*3 (8)	112	Opp	219				Furnished
489XAAHX-*3 (4)	250	Opp	54				Furnished	442XXAHX-*3 (8)	94	Opp	259				Furnished
489XCAHX-*3 (5)	250	Opp	69				Furnished	660XFAHX-*3 (9)	301	Opp	81				Furnished
489XFAHX-*3 (6)	250	Opp	85				Furnished	660XQAHX-*3 (10)	216	Opp	113				Furnished
489XHAHX-*3 (7)	250	Opp	99				Furnished	660XSAHX-*3 (11)	156	Opp	156				Furnished
489XLAHX-*3 (8)	222	Opp	110				Furnished								
489XQAHX-*3 (8)	206	Opp	118				Furnished								
489XRAHX-*3 (8)	178	Opp	137				Furnished								
489XSAHX-*3 (8)	150	Opp	163				Furnished								
489XUAHX-*3 (8)	126	Opp	194				Furnished								
489XWAHX-*3 (8)	107	Opp	229				Furnished								

Continued Next Page

CAUTION: Eaton Transmission Division has established a Maximum Torque Limit for the Transmission P.T.O. Driver Gear. For all RT/RTO/RTLO transmissions the torque limit is 350 Ft-lbs [475 N.m] unless the transmission has been upgraded to a roller type input shaft bearing, Eaton part number 4301417, then 500 Ft-lbs [678 N.m] torque becomes the Maximum limit. All torque limits on this application page reflect the 350 Ft-lbs [475 N.m] limit at the Transmission P.T.O. Drive Gear. Refer to the Chelsea P.T.O. Torque Limit Chart in the front section of this catalog for complete torque limit information.

CAUTION: Do not use geared adapters with 442 "A" and "C" ratios.

CAUTION: 660/680 Series: Applications above 1500 RPM output shaft speed, contact Chelsea Technical Service for approval.

NOTE: The 100 Series will not mount on the right side without an adapter gear due to output shaft interference with transmission housing.

NOTE: The AK & XK output flanges can not be used with the "A" & "C" ratios on the 489 Series P.T.O.s due to mounting stud interference. Use a RA or RB rotatable flange for the XK and the RA for the AK flange.

NOTE: If Ordering the 230/231 Series with the Shaft Brake Option, order the "BA" Output for Automatic Transmissions and the "BD" Output for Manual Transmissions.

NOTE: The 422XBAH Must use one of the Geared Adapters Listed on the Application Page. Direction of Rotation Shown is the Final Output Shaft Rotation w/ Geared Adapter.

(1) Gear and Shaft Kit No. KXA-2-P-565
(2) Filler block furnished with P.T.O.
(3) Input Gear Part No. 5-P-1418
(4) Input Gear Part No. 5-P-1280
(5) Input Gear Part No. 5-P-1287
(6) Input Gear Part No. 5-P-1077
(7) Input Gear Part No. 5-P-1364
(8) Input Gear Part No. 5-P-1004
(9) Input Gear Part No. 5-P-1242
(10) Input Gear Part No. 5-P-1246
(11) Input Gear Part No. 5-P-1322

January 2008

Parker Hannifin Corporation
Chelsea Products Division
Olive Branch, MS 38654 USA

FM-14D310B-LST	RT-12709A	RT-14609A	RT-14910B-AS2	RT-9509C	RTF-12609A	RTF-13710B	RTF-14915
FM-15D310B-LST	RT-12710B	RT-14709A	RT-14915	RT-9710B	RTF-12709H	RTF-14609A	RTF-15715
RT-11609A	RT-13609A	RT-14710B	RT-15715	RT-9710B	RTF-12710B	RTF-14709H	RTF-8908LL
RT-11709H	RT-13709H	RT-14710B-AS2	RT-8709B	RTA-14710B-AS	RTF-13609A	RTF-14710B	RTL-13710B
RT-12609A	RT-13710B	RT-14715	RT-8908LL	RTF-11609A	RTF-13709H	RTF-14715	RTL-14710B

BOTTOM SIDE ONLY

TRANSMISSION GEAR DATA:

BOT 8-Bolt Opening Gear FORWARD of Centerline

47 Teeth - SPUR

PITCH LINE TO APERTURE FACE:

.8050" (20.4500MM)

RIGHT SIDE ONLY

TRANSMISSION GEAR DATA:

R.H. 6-Bolt Opening Gear FORWARD of Centerline

45 Teeth - SPUR

PITCH LINE TO APERTURE FACE:

1.0850" (27.5600MM)

Caution: Application Approval Required for P.T.O. Output Shaft Speeds Above 2500 R.P.M.

BOTTOM Side P.T.O. Model	Inter. Torq.	Dir. Rot.	Engine % Hi	Engine % Rev	Filler Block	Adapter Assy.	Stud Kit	RIGHT Side P.T.O. Model	Inter. Torq.	Dir. Rot.	Engine % Hi	Engine % Rev	Filler Block	Adapter Assy.	Stud Kit
ONE SPEED - TWO GEAR - MECHANICAL SHIFT															
489XXAHX-*3 (8)	91	Opp	271				Furnished								
680XFAHX-*3 (9)	288	Opp	85				Furnished								
680XQAHX-*3 (10)	206	Opp	118				Furnished								
680XSAHX-*3 (11)	150	Opp	163				Furnished								
823XBAHX-*3 (12)	423	Opp	58				Furnished								
823XJAHX-*3 (13)	279	Opp	88				Furnished								
823XMAHX-*3 (14)	238	Opp	103				Furnished								
823XRAHX-*3 (15)	172	Opp	142				Furnished								
823XTKTX-*3 (16)	142	Opp	172		8-A-165 (2)		Furnished								
880XBAHX-*3 (17)	423	Opp	58				Furnished								
880XDAHX-*3 (18)	357	Opp	69				Furnished								
880XGAHX-*3 (19)	329	Opp	74				Furnished								
880XJAHX-*3 (20)	279	Opp	88				Furnished								
880XMAHX-*3 (21)	238	Opp	103				Furnished								
880XQAHX-*3 (22)	203	Opp	120				Furnished								
880XRAHX-*3 (23)	172	Opp	142				Furnished								
880XTAHX-*3 (24)	134	Opp	183				Furnished								
ONE SPEED - TWO GEAR - POWERSHIFT (AIR)															
230XAAJX-*3	250	Opp	45			328481X	Furnished	230XAAJX-*3	250	Opp	43				Furnished
230XBAJX-*3	250	Opp	58			328481X	Furnished	230XBAJX-*3	250	Opp	56				Furnished
230XDAJX-*3	250	Opp	67			328481X	Furnished	230XDAJX-*3	250	Opp	64				Furnished
230XKAJX-*3	250	Opp	91			328481X	Furnished	230XKAJX-*3	250	Opp	87				Furnished
230XQAJX-*3	203	Opp	121			328481X	Furnished	230XQAJX-*3	212	Opp	116				Furnished
230XUAJX-*3	126	Opp	194			328481X	Furnished	230XUAJX-*3	132	Opp	185				Furnished
236ZDAHX-*3 (8)	250	Opp	89			328564X	Furnished	236XDAHX-*3 (8)	250	Opp	85				Furnished
236ZKAHX-*3 (8)	215	Opp	114			328564X	Furnished	236XKAHX-*3 (8)	224	Opp	109				Furnished
236ZQAHX-*3 (8)	160	Opp	154			328564X	Furnished	236XQAHX-*3 (8)	166	Opp	147				Furnished
236ZUAHX-*3 (8)	139	Opp	176			328564X	Furnished	236XUAHX-*3 (8)	145	Opp	168				Furnished

Continued Next Page

CAUTION: Eaton Transmission Division has established a Maximum Torque Limit for the Transmission P.T.O. Driver Gear. For all RT/RTO/RTLO transmissions the torque limit is 350 Ft-lbs [475 N.m] unless the transmission has been upgraded to a roller type input shaft bearing, Eaton part number 4301417, then 500 Ft-lbs [678 N.m] torque becomes the Maximum limit. All torque limits on this application page reflect the 350 Ft-lbs [475 N.m] limit at the Transmission P.T.O. Drive Gear. Refer to the Chelsea P.T.O. Torque Limit Chart in the front section of this catalog for complete torque limit information.

CAUTION: Do not use geared adapters with 442 "A" and "C" ratios.

CAUTION: 660/680 Series: Applications above 1500 RPM output shaft speed, contact Chelsea Technical Service for approval.

NOTE: The 100 Series will not mount on the right side without an adapter gear due to output shaft interference with transmission housing.

NOTE: The AK & XK output flanges can not be used with the "A" & "C" ratios on the 489 Series P.T.O.s due to mounting stud interference. Use a RA or RB rotatable flange for the XK and the RA for the AK flange.

NOTE: If Ordering the 230/231 Series with the Shaft Brake Option, order the "BA" Output for Automatic Transmissions and the "BD" Output for Manual Transmissions.

NOTE: The 422XBAH Must use one of the Geared Adapters Listed on the Application Page. Direction of Rotation Shown is the Final Output Shaft Rotation w/ Geared Adapter.

(2) Filler block furnished with P.T.O.
(8) Input Gear Part No. 5-P-1004
(9) Input Gear Part No. 5-P-1242
(10) Input Gear Part No. 5-P-1246
(11) Input Gear Part No. 5-P-1322
(12) Input Gear Part No. 5-P-285
(13) Input Gear Part No. 5-P-325
(14) Input Gear Part No. 5-P-283
(15) Input Gear Part No. 5-P-721
(16) Input Gear Part No. 5-P-1395
(17) Input Gear Part No. 5-P-1100
(18) Input Gear Part No. 5-P-1101
(19) Input Gear Part No. 5-P-1135
(20) Input Gear Part No. 5-P-1102
(21) Input Gear Part No. 5-P-1103
(22) Input Gear Part No. 5-P-1385
(23) Input Gear Part No. 5-P-1104
(24) Input Gear Part No. 5-P-1105

Parker Hannifin Corporation
Chelsea Products Division
Olive Branch, MS 38654 USA

FM-14D310B-LST	RT-12709A	RT-14609A	RT-14910B-AS2	RT-9509C	RTF-12609A	RTF-13710B	RTF-14915
FM-15D310B-LST	RT-12710B	RT-14709A	RT-14915	RT-9710B	RTF-12709H	RTF-14609A	RTF-15715
RT-11609A	RT-13609A	RT-14710B	RT-15715	RT-9710B	RTF-12710B	RTF-14709H	RTF-8908LL
RT-11709H	RT-13709H	RT-14710B-AS2	RT-8709B	RTA-14710B-AS	RTF-13609A	RTF-14710B	RTL-13710B
RT-12609A	RT-13710B	RT-14715	RT-8908LL	RTF-11609A	RTF-13709H	RTF-14715	RTL-14710B

BOTTOM SIDE ONLY

TRANSMISSION GEAR DATA:

BOT 8-Bolt Opening Gear FORWARD of Centerline

47 Teeth - SPUR

PITCH LINE TO APERTURE FACE:

.8050" (20.4500MM)

RIGHT SIDE ONLY

TRANSMISSION GEAR DATA:

R.H. 6-Bolt Opening Gear FORWARD of Centerline

45 Teeth - SPUR

PITCH LINE TO APERTURE FACE:

1.0850" (27.5600MM)

Caution: Application Approval Required for P.T.O. Output Shaft Speeds Above 2500 R.P.M.

BOTTOM Side P.T.O. Model	Inter. Torq.	Dir. Rot.	Engine % Hi	Engine % Rev	Filler Block	Adapter Assy.	Stud Kit	RIGHT Side P.T.O. Model	Inter. Torq.	Dir. Rot.	Engine % Hi	Engine % Rev	Filler Block	Adapter Assy.	Stud Kit
ONE SPEED - TWO GEAR - POWERSHIFT (AIR)															
885XBAHX-*3 (17)	423	Opp	58				Furnished								
885XGAHX-*3 (19)	329	Opp	74				Furnished								
885XJAHX-*3 (20)	279	Opp	88				Furnished								
885XMAHX-*3 (21)	238	Opp	103				Furnished								
ONE SPEED - FORWARD & REVERSE															
340SFAHX-*5 (25)	200	Opp	74	78	7-A-032(P) 7-A-140 (26)	310778X	Furnished	340XFAHX-*5 (25)	200	Opp	71	75	7-A-140 (2)		Furnished
352ZSAHX-*3 (8)	140	Opp	165	214		328564X	Furnished	352XSAHX-*3 (8)	140	Opp	158	205			Furnished
863XBAHX-*5	423	Opp	58	72			Furnished								
ONE SPEED - DUAL SHAFT															
452ZSAHX-*3 (8)	140	Opp	165			328564X	Furnished	452XSAHX-*3 (8)	140	Opp	158				Furnished
GEARED ADAPTERS															
628XAHX-4AH					8-A-032		Furnished	626XAHX-3AH							Furnished
								630XAHX-3AH							Furnished
								645XAHX-3AH							Furnished

Continued Next Page

CAUTION: Eaton Transmission Division has established a Maximum Torque Limit for the Transmission P.T.O. Driver Gear. For all RT/RTO/RTLO transmissions the torque limit is 350 Ft-lbs [475 N.m] unless the transmission has been upgraded to a roller type input shaft bearing, Eaton part number 4301417, then 500 Ft-lbs [678 N.m] torque becomes the Maximum limit. All torque limits on this application page reflect the 350 Ft-lbs [475 N.m] limit at the Transmission P.T.O. Drive Gear. Refer to the Chelsea P.T.O. Torque Limit Chart in the front section of this catalog for complete torque limit information.

CAUTION: Do not use geared adapters with 442 "A" and "C" ratios.

CAUTION: 660/680 Series: Applications above 1500 RPM output shaft speed, contact Chelsea Technical Service for approval.

NOTE: The 100 Series will not mount on the right side without an adapter gear due to output shaft interference with transmission housing.

NOTE: The AK & XK output flanges can not be used with the "A" & "C" ratios on the 489 Series P.T.O.s due to mounting stud interference. Use a RA or RB rotatable flange for the XK and the RA for the AK flange.

NOTE: If Ordering the 230/231 Series with the Shaft Brake Option, order the "BA" Output for Automatic Transmissions and the "BD" Output for Manual Transmissions.

NOTE: The 422XBAH Must use one of the Geared Adapters Listed on the Application Page. Direction of Rotation Shown is the Final Output Shaft Rotation w/ Geared Adapter.

(2) Filler block furnished with P.T.O.
(8) Input Gear Part No. 5-P-1004
(17) Input Gear Part No. 5-P-1100
(19) Input Gear Part No. 5-P-1135
(20) Input Gear Part No. 5-P-1102
(21) Input Gear Part No. 5-P-1103
(25) Input Gear Part No. 5-P-581
(26) Filler block furnished with P.T.O. but not required

January 2008

Parker Hannifin Corporation
Chelsea Products Division
Olive Branch, MS 38654 USA

FM-14D310B-LST	RT-12709A	RT-14609A	RT-14910B-AS2	RT-9509C	RTF-12609A	RTF-13710B	RTF-14915
FM-15D310B-LST	RT-12710B	RT-14709A	RT-14915	RT-9710B	RTF-12709H	RTF-14609A	RTF-15715
RT-11609A	RT-13609A	RT-14710B	RT-15715	RT-9710B	RTF-12710B	RTF-14709H	RTF-8908LL
RT-11709H	RT-13709H	RT-14710B-AS2	RT-8709B	RTA-14710B-AS	RTF-13609A	RTF-14710B	RTL-13710B
RT-12609A	RT-13710B	RT-14715	RT-8908LL	RTF-11609A	RTF-13709H	RTF-14715	RTL-14710B

REAR SIDE ONLY | **RIGHT SIDE ONLY**

TRANSMISSION GEAR DATA:

REAR 0-Bolt Opening Gear NON-STANDARD of Centerline

48 Teeth - SPUR

PITCH LINE TO APERTURE FACE:

0" (0MM)

Caution: Application Approval Required for P.T.O. Output Shaft Speeds Above 2500 R.P.M.

REAR Side P.T.O. Model	Inter. Torq.	Dir. Rot.	Engine % Hi	Engine % Rev	Filler Block	Adapter Assy.	Stud Kit	RIGHT Side P.T.O. Model	Inter. Torq.	Dir. Rot.	Engine % Hi	Engine % Rev	Filler Block	Adapter Assy.	Stud Kit

REAR MOUNT & THRUSHAFT

541-LAT	400	Eng	67				Furnished								
541-LAU	400	Eng	67				Furnished								
541-LBD	400	Eng	67				Furnished								
541-MAT	350	Eng	87				Furnished								
541-MAU	350	Eng	87				Furnished								
541-MBD	350	Eng	87				Furnished								
541-NAT	300	Eng	99				Furnished								
541-NAU	300	Eng	99				Furnished								
541-NBD	300	Eng	99				Furnished								

CAUTION: Eaton Transmission Division has established a Maximum Torque Limit for the Transmission P.T.O. Driver Gear. For all RT/RTO/RTLO transmissions the torque limit is 350 Ft-lbs [475 N.m] unless the transmission has been upgraded to a roller type input shaft bearing, Eaton part number 4301417, then 500 Ft-lbs [678 N.m] torque becomes the Maximum limit. All torque limits on this application page reflect the 350 Ft-lbs [475 N.m] limit at the Transmission P.T.O. Drive Gear. Refer to the Chelsea P.T.O. Torque Limit Chart in the front section of this catalog for complete torque limit information.

CAUTION: Do not use geared adapters with 442 "A" and "C" ratios.

CAUTION: 660/680 Series: Applications above 1500 RPM output shaft speed, contact Chelsea Technical Service for approval.

NOTE: The 100 Series will not mount on the right side without an adapter gear due to output shaft interference with transmission housing.

NOTE: The AK & XK output flanges can not be used with the "A" & "C" ratios on the 489 Series P.T.O.s due to mounting stud interference. Use a RA or RB rotatable flange for the XK and the RA for the AK flange.

NOTE: If Ordering the 230/231 Series with the Shaft Brake Option, order the "BA" Output for Automatic Transmissions and the "BD" Output for Manual Transmissions.

NOTE: The 422XBAH Must use one of the Geared Adapters Listed on the Application Page. Direction of Rotation Shown is the Final Output Shaft Rotation w/ Geared Adapter.

RT-6610
RT-6613
RT-7609
RTO-7613

BOTTOM SIDE ONLY

TRANSMISSION GEAR DATA:
BOT 8-Bolt Opening Gear REAR of Centerline
33 Teeth - SPUR

PITCH LINE TO APERTURE FACE:
.8050" (20.4500MM)

RIGHT SIDE ONLY

TRANSMISSION GEAR DATA:
R.H. 6-Bolt Opening Gear REAR of Centerline
33 Teeth - SPUR

PITCH LINE TO APERTURE FACE:
1.0850" (27.5600MM)

Caution: Application Approval Required for P.T.O. Output Shaft Speeds Above 2500 R.P.M.

BOTTOM Side P.T.O. Model	Inter. Torq.	Dir. Rot.	Engine % Hi	Engine % Rev	Filler Block	Adapter Assy.	Stud Kit	RIGHT Side P.T.O. Model	Inter. Torq.	Dir. Rot.	Engine % Hi	Engine % Rev	Filler Block	Adapter Assy.	Stud Kit
ONE SPEED - SINGLE GEAR - MECHANICAL SHIFT															
100XRAHX-*4 (1)	125	Eng	99			328481X	Furnished	100XRAHX-*4 (1)	125	Opp	99			329138-1X	Furnished
812XKAHX-*4	400	Eng	66				Furnished								
ONE SPEED - TWO GEAR - MECHANICAL SHIFT															
221ZCAHX-*6	250	Opp	44		7-A-032(P)(2)	328564X	Furnished	221XCAHX-*6	250	Opp	44		7-A-032 (2)		Furnished
221ZEAHX-*6	250	Opp	51			328564X	Furnished	221XEAHX-*6	250	Opp	51				Furnished
221ZLAHX-*6	200	Opp	69			328564X	Furnished	221XLAHX-*6	200	Opp	69				Furnished
221ZPAHX-*6	140	Opp	83			328564X	Furnished	221XPAHX-*6	200	Opp	83				Furnished
442ZFAHX-*6 (3)	250	Opp	62			328564X	Furnished	442XFAHX-*6 (3)	250	Opp	62				Furnished
442ZHAHX-*6 (4)	250	Opp	72			328564X	Furnished	442XHAHX-*6 (4)	250	Opp	72				Furnished
442ZLAHX-*6 (5)	250	Opp	80			328564X	Furnished	442XLAHX-*6 (5)	250	Opp	80				Furnished
442ZQAHX-*6 (5)	225	Opp	86			328564X	Furnished	442XQAHX-*6 (5)	225	Opp	86				Furnished
442ZRAHX-*6 (5)	225	Opp	99			328564X	Furnished	442XRAHX-*6 (5)	225	Opp	99				Furnished
442ZSAHX-*6 (5)	200	Opp	118			328564X	Furnished	442XSAHX-*6 (5)	200	Opp	118				Furnished
442ZUAHX-*6 (5)	195	Opp	141			328564X	Furnished	442XUAHX-*6 (5)	195	Opp	141				Furnished
442ZWAHX-*6 (5)	175	Opp	166			328564X	Furnished	442XWAHX-*6 (5)	175	Opp	166				Furnished
442ZXAHX-*6 (5)	140	Opp	196			328564X	Furnished	442XXAHX-*6 (5)	140	Opp	196				Furnished
489XFAHX-*6 (3)	250	Opp	62				Furnished	660XFAHX-*6 (6)	375	Opp	62				Furnished
489XHAHX-*6 (4)	250	Opp	72				Furnished	660XQAHX-*6 (7)	375	Opp	86				Furnished
489XLAHX-*6 (5)	250	Opp	80				Furnished	660XSAHX-*6 (8)	325	Opp	118				Furnished
489XQAHX-*6 (5)	225	Opp	86				Furnished								
489XRAHX-*6 (5)	225	Opp	99				Furnished								
489XSAHX-*6 (5)	200	Opp	118				Furnished								
489XUAHX-*6 (5)	195	Opp	141				Furnished								
489XWAHX-*6 (5)	175	Opp	166				Furnished								
489XXAHX-*6 (5)	140	Opp	196				Furnished								
680XFAHX-*6 (6)	375	Opp	62				Furnished								
680XQAHX-*6 (7)	375	Opp	86				Furnished								
680XSAHX-*6 (8)	325	Opp	118				Furnished								

Continued Next Page

CAUTION: Do not use geared adapters with 442 "A" and "C" ratios.

CAUTION: 660/680 Series: Applications above 1500 RPM output shaft speed, contact Chelsea Technical Service for approval.

NOTE: All P.T.O.s on R.H. side require assembly arrangement "6" to put output shaft above center. This will clear the bulge in the transmission. A direct mount pump will interfere with the bulge.

NOTE: The AK & XK output flanges can not be used with the "A" & "C" ratios on the 489 Series P.T.O.s due to mounting stud interference. Use a RA or RB rotatable flange for the XK and the RA for the AK flange.

NOTE: If Ordering the 230/231 Series with the Shaft Brake Option, order the "BA" Output for Automatic Transmissions and the "BD" Output for Manual Transmissions.

(1) Gear and Shaft Kit No. KXA-2-P-565
(2) Filler block furnished with P.T.O.
(3) Input Gear Part No. 5-P-1077
(4) Input Gear Part No. 5-P-1364
(5) Input Gear Part No. 5-P-1004
(6) Input Gear Part No. 5-P-1242
(7) Input Gear Part No. 5-P-1246
(8) Input Gear Part No. 5-P-1322

Parker Hannifin Corporation
Chelsea Products Division
Olive Branch, MS 38654 USA

RT-6610
RT-6613
RT-7609
RTO-7613

BOTTOM SIDE ONLY

TRANSMISSION GEAR DATA:
BOT 8-Bolt Opening Gear REAR of Centerline
33 Teeth - SPUR
PITCH LINE TO APERTURE FACE:
.8050" (20.4500MM)

RIGHT SIDE ONLY

TRANSMISSION GEAR DATA:
R.H. 6-Bolt Opening Gear REAR of Centerline
33 Teeth - SPUR
PITCH LINE TO APERTURE FACE:
1.0850" (27.5600MM)

Caution: Application Approval Required for P.T.O. Output Shaft Speeds Above 2500 R.P.M.

BOTTOM Side P.T.O. Model	Inter. Torq.	Dir. Rot.	Engine % Hi	Engine % Rev	Filler Block	Adapter Assy.	Stud Kit	RIGHT Side P.T.O. Model	Inter. Torq.	Dir. Rot.	Engine % Hi	Engine % Rev	Filler Block	Adapter Assy.	Stud Kit
ONE SPEED - TWO GEAR - MECHANICAL SHIFT															
823XBAHX-*6 (9)	500	Opp	42				Furnished								
823XMAHX-*6 (10)	500	Opp	75				Furnished								
823XRAHX-*6 (11)	400	Opp	103				Furnished								
823XTKTX-*6 (12)	372	Opp	125		8-A-165 (2)		Furnished								
880XBAHX-*6 (13)	500	Opp	42				Furnished								
880XDAHX-*6 (14)	500	Opp	50				Furnished								
880XGAHX-*6 (15)	500	Opp	54				Furnished								
880XJAHX-*6 (16)	500	Opp	64				Furnished								
880XMAHX-*6 (17)	500	Opp	75				Furnished								
880XQAHX-*6 (18)	450	Opp	87				Furnished								
880XRAHX-*6 (19)	400	Opp	103				Furnished								
880XTAHX-*6 (20)	350	Opp	133				Furnished								
ONE SPEED - TWO GEAR - POWERSHIFT (AIR)															
230XAAJX-*6	250	Opp	32			328481X	Furnished	230XAAJX-*6	250	Opp	32				Furnished
230XBAJX-*6	250	Opp	42			328481X	Furnished	230XBAJX-*6	250	Opp	42				Furnished
230XDAJX-*6	250	Opp	49			328481X	Furnished	230XDAJX-*6	250	Opp	49				Furnished
230XKAJX-*6	250	Opp	66			328481X	Furnished	230XKAJX-*6	250	Opp	66				Furnished
230XQAJX-*6	250	Opp	88			328481X	Furnished	230XQAJX-*6	250	Opp	88				Furnished
230XUAJX-*6	225	Opp	140			328481X	Furnished	230XUAJX-*6	225	Opp	140				Furnished
236ZDAHX-*6 (5)	250	Opp	65			328564X	Furnished	236XDAHX-*6 (5)	250	Opp	65				Furnished
236ZKAHX-*6 (5)	250	Opp	82			328564X	Furnished	236XKAHX-*6 (5)	250	Opp	82				Furnished
236ZQAHX-*6 (5)	250	Opp	111			328564X	Furnished	236XQAHX-*6 (5)	250	Opp	111				Furnished
236ZUAHX-*6 (5)	225	Opp	127			328564X	Furnished	236XUAHX-*6 (5)	225	Opp	127				Furnished
885XBAHX-*6 (13)	500	Opp	42				Furnished								
885XGAHX-*6 (15)	500	Opp	54				Furnished								
885XJAHX-*6 (16)	500	Opp	64				Furnished								
885XMAHX-*6 (17)	500	Opp	75				Furnished								

Continued Next Page

CAUTION: Do not use geared adapters with 442 "A" and "C" ratios.

CAUTION: 660/680 Series: Applications above 1500 RPM output shaft speed, contact Chelsea Technical Service for approval.

NOTE: All P.T.O.s on R.H. side require assembly arrangement "6" to put output shaft above center. This will clear the bulge in the transmission. A direct mount pump will interfere with the bulge.

NOTE: The AK & XK output flanges can not be used with the "A" & "C" ratios on the 489 Series P.T.O.s due to mounting stud interference. Use a RA or RB rotatable flange for the XK and the RA for the AK flange.

NOTE: If Ordering the 230/231 Series with the Shaft Brake Option, order the "BA" Output for Automatic Transmissions and the "BD" Output for Manual Transmissions.

(2) Filler block furnished with P.T.O.
(5) Input Gear Part No. 5-P-1004
(9) Input Gear Part No. 5-P-285
(10) Input Gear Part No. 5-P-283
(11) Input Gear Part No. 5-P-721
(12) Input Gear Part No. 5-P-1395
(13) Input Gear Part No. 5-P-1100
(14) Input Gear Part No. 5-P-1101
(15) Input Gear Part No. 5-P-1135
(16) Input Gear Part No. 5-P-1102
(17) Input Gear Part No. 5-P-1103
(18) Input Gear Part No. 5-P-1385
(19) Input Gear Part No. 5-P-1104
(20) Input Gear Part No. 5-P-1105

Parker Hannifin Corporation
Chelsea Products Division
Olive Branch, MS 38654 USA

RT-6610
RT-6613
RT-7609
RTO-7613

BOTTOM SIDE ONLY

TRANSMISSION GEAR DATA:
BOT 8-Bolt Opening Gear REAR of Centerline
33 Teeth - SPUR

PITCH LINE TO APERTURE FACE:
.8050" (20.4500MM)

RIGHT SIDE ONLY

TRANSMISSION GEAR DATA:
R.H. 6-Bolt Opening Gear REAR of Centerline
33 Teeth - SPUR

PITCH LINE TO APERTURE FACE:
1.0850" (27.5600MM)

Caution: Application Approval Required for P.T.O. Output Shaft Speeds Above 2500 R.P.M.

BOTTOM Side P.T.O. Model	Inter. Torq.	Dir. Rot.	Engine % Hi	Engine % Rev	Filler Block	Adapter Assy.	Stud Kit	RIGHT Side P.T.O. Model	Inter. Torq.	Dir. Rot.	Engine % Hi	Engine % Rev	Filler Block	Adapter Assy.	Stud Kit
ONE SPEED - FORWARD & REVERSE															
340SFAHX-*4 (21)	200	Opp	54	56	7-A-032(P)	310778X	Furnished	340XFAHX-*4 (21)	200	Opp	54	56	7-A-140 (2)		Furnished
352ZSAHX-*4 (5)	140	Opp	120	155		328564X	Furnished	352XSAHX-*6 (5)	140	Opp	120	155			Furnished
863XBAHX-*4	500	Opp	42	52			Furnished								
ONE SPEED - DUAL SHAFT															
452ZSAHX-*6 (5)	140	Opp	120			328564X	Furnished	452XSAHX-*6 (5)	140	Eng	120		7-A-2000(T)	328530-1X	7170-31X
GEARED ADAPTERS															
628XAHX-4AH					8-A-032		Furnished	626XAHX-4AH							Furnished
								630XAHX-4AH							Furnished
								645XAHX-4AH							Furnished

CAUTION: Do not use geared adapters with 442 "A" and "C" ratios.

CAUTION: 660/680 Series: Applications above 1500 RPM output shaft speed, contact Chelsea Technical Service for approval.

NOTE: All P.T.O.s on R.H. side require assembly arrangement "6" to put output shaft above center. This will clear the bulge in the transmission. A direct mount pump will interfere with the bulge.

NOTE: The AK & XK output flanges can not be used with the "A" & "C" ratios on the 489 Series P.T.O.s due to mounting stud interference. Use a RA or RB rotatable flange for the XK and the RA for the AK flange.

NOTE: If Ordering the 230/231 Series with the Shaft Brake Option, order the "BA" Output for Automatic Transmissions and the "BD" Output for Manual Transmissions.

(2) Filler block furnished with P.T.O.
(5) Input Gear Part No. 5-P-1004
(21) Input Gear Part No. 5-P-581

RTO-6610

RTO-6613

BOTTOM SIDE ONLY

TRANSMISSION GEAR DATA:

BOT 8-Bolt Opening Gear REAR of Centerline

33 Teeth - SPUR

PITCH LINE TO APERTURE FACE:

.8050" (20.4500MM)

RIGHT SIDE ONLY

TRANSMISSION GEAR DATA:

R.H. 6-Bolt Opening Gear REAR of Centerline

33 Teeth - SPUR

PITCH LINE TO APERTURE FACE:

1.0850" (27.5600MM)

Caution: Application Approval Required for P.T.O. Output Shaft Speeds Above 2500 R.P.M.

BOTTOM Side P.T.O. Model	Inter. Torq.	Dir. Rot.	Engine % Hi	Engine % Rev	Filler Block	Adapter Assy.	Stud Kit	RIGHT Side P.T.O. Model	Inter. Torq.	Dir. Rot.	Engine % Hi	Engine % Rev	Filler Block	Adapter Assy.	Stud Kit
ONE SPEED - SINGLE GEAR - MECHANICAL SHIFT															
100XRAHX-*4 (1)	125	Eng	123			328481X	Furnished	100XRAHX-*4 (1)	125	Opp	123			329138-1X	Furnished
812XKAHX-*4	400	Eng	82				Furnished								
ONE SPEED - TWO GEAR - MECHANICAL SHIFT															
221ZCAHX-*6	250	Opp	55		7-A-032(P)(2)	328564X	Furnished	221XCAHX-*6	250	Opp	55		7-A-032 (2)		Furnished
221ZEAHX-*6	250	Opp	63			328564X	Furnished	221XEAHX-*6	250	Opp	63				Furnished
221ZLAHX-*6	200	Opp	85			328564X	Furnished	221XLAHX-*6	200	Opp	85				Furnished
221ZPAHX-*6	140	Opp	103			328564X	Furnished	221XPAHX-*6	200	Opp	103				Furnished
442ZFAHX-*6 (3)	250	Opp	76			328564X	Furnished	442XFAHX-*6 (3)	250	Opp	76				Furnished
442ZHAHX-*6 (4)	250	Opp	88			328564X	Furnished	442XHAHX-*6 (4)	250	Opp	88				Furnished
442ZLAHX-*6 (5)	250	Opp	99			328564X	Furnished	442XLAHX-*6 (5)	250	Opp	99				Furnished
442ZQAHX-*6 (5)	225	Opp	106			328564X	Furnished	442XQAHX-*6 (5)	225	Opp	106				Furnished
442ZRAHX-*6 (5)	225	Opp	123			328564X	Furnished	442XRAHX-*6 (5)	225	Opp	123				Furnished
442ZSAHX-*6 (5)	200	Opp	147			328564X	Furnished	442XSAHX-*6 (5)	200	Opp	147				Furnished
442ZUAHX-*6 (5)	195	Opp	175			328564X	Furnished	442XUAHX-*6 (5)	195	Opp	175				Furnished
442ZWAHX-*6 (5)	175	Opp	206			328564X	Furnished	442XWAHX-*6 (5)	175	Opp	206				Furnished
442ZXAHX-*6 (5)	140	Opp	243			328564X	Furnished	442XXAHX-*6 (5)	140	Opp	243				Furnished
489XFAHX-*6 (3)	250	Opp	76				Furnished	660XFAHX-*6 (6)	375	Opp	76				Furnished
489XHAHX-*6 (4)	250	Opp	88				Furnished	660XQAHX-*6 (7)	375	Opp	106				Furnished
489XLAHX-*6 (5)	250	Opp	99				Furnished	660XSAHX-*6 (8)	325	Opp	147				Furnished
489XQAHX-*6 (5)	225	Opp	106				Furnished								
489XRAHX-*6 (5)	225	Opp	123				Furnished								
489XSAHX-*6 (5)	200	Opp	147				Furnished								
489XUAHX-*6 (5)	195	Opp	175				Furnished								
489XWAHX-*6 (5)	175	Opp	206				Furnished								
489XXAHX-*6 (5)	140	Opp	243				Furnished								
680XFAHX-*6 (6)	375	Opp	76				Furnished								
680XQAHX-*6 (7)	375	Opp	106				Furnished								
680XSAHX-*6 (8)	325	Opp	147				Furnished								

Continued Next Page

CAUTION: Do not use geared adapters with 442 "A" and "C" ratios.

CAUTION: 660/680 Series: Applications above 1500 RPM output shaft speed, contact Chelsea Technical Service for approval.

NOTE: All P.T.O.s on R.H. side require assembly arrangement "6" to put output shaft above center. This will clear the bulge in the transmission. A direct mount pump will interfere with the bulge.

NOTE: The AK & XK output flanges can not be used with the "A" & "C" ratios on the 489 Series P.T.O.s due to mounting stud interference. Use a RA or RB rotatable flange for the XK and the RA for the AK flange.

NOTE: If Ordering the 230/231 Series with the Shaft Brake Option, order the "BA" Output for Automatic Transmissions and the "BD" Output for Manual Transmissions.

(1) Gear and Shaft Kit No. KXA-2-P-565
(2) Filler block furnished with P.T.O.
(3) Input Gear Part No. 5-P-1077
(4) Input Gear Part No. 5-P-1364
(5) Input Gear Part No. 5-P-1004
(6) Input Gear Part No. 5-P-1242
(7) Input Gear Part No. 5-P-1246
(8) Input Gear Part No. 5-P-1322

RTO-6610
RTO-6613

BOTTOM SIDE ONLY

TRANSMISSION GEAR DATA:
BOT 8-Bolt Opening Gear REAR of Centerline
33 Teeth - SPUR

PITCH LINE TO APERTURE FACE:
.8050" (20.4500MM)

RIGHT SIDE ONLY

TRANSMISSION GEAR DATA:
R.H. 6-Bolt Opening Gear REAR of Centerline
33 Teeth - SPUR

PITCH LINE TO APERTURE FACE:
1.0850" (27.5600MM)

Caution: Application Approval Required for P.T.O. Output Shaft Speeds Above 2500 R.P.M.

BOTTOM Side P.T.O. Model	Inter. Torq.	Dir. Rot.	Engine % Hi	Engine % Rev	Filler Block	Adapter Assy.	Stud Kit	RIGHT Side P.T.O. Model	Inter. Torq.	Dir. Rot.	Engine % Hi	Engine % Rev	Filler Block	Adapter Assy.	Stud Kit
ONE SPEED - TWO GEAR - MECHANICAL SHIFT															
823XBAHX-*6 (9)	500	Opp	52				Furnished								
823XMAHX-*6 (10)	500	Opp	92				Furnished								
823XRAHX-*6 (11)	400	Opp	128				Furnished								
823XTKTX-*6 (12)	372	Opp	154		8-A-165 (2)		Furnished								
880XBAHX-*6 (13)	500	Opp	52				Furnished								
880XDAHX-*6 (14)	500	Opp	62				Furnished								
880XGAHX-*6 (15)	500	Opp	67				Furnished								
880XJAHX-*6 (16)	500	Opp	79				Furnished								
880XMAHX-*6 (17)	500	Opp	92				Furnished								
880XQAHX-*6 (18)	450	Opp	109				Furnished								
880XRAHX-*6 (19)	400	Opp	128				Furnished								
880XTAHX-*6 (20)	350	Opp	164				Furnished								
ONE SPEED - TWO GEAR - POWERSHIFT (AIR)															
230XAAJX-*6	250	Opp	40			328481X	Furnished	230XAAJX-*6	250	Opp	40				Furnished
230XBAJX-*6	250	Opp	52			328481X	Furnished	230XBAJX-*6	250	Opp	52				Furnished
230XDAJX-*6	250	Opp	60			328481X	Furnished	230XDAJX-*6	250	Opp	60				Furnished
230XKAJX-*6	250	Opp	82			328481X	Furnished	230XKAJX-*6	250	Opp	82				Furnished
230XQAJX-*6	250	Opp	109			328481X	Furnished	230XQAJX-*6	250	Opp	109				Furnished
230XUAJX-*6	225	Opp	174			328481X	Furnished	230XUAJX-*6	225	Opp	174				Furnished
236ZDAHX-*6 (5)	250	Opp	80			328564X	Furnished	236XDAHX-*6 (5)	250	Opp	80				Furnished
236ZKAHX-*6 (5)	250	Opp	102			328564X	Furnished	236XKAHX-*6 (5)	250	Opp	102				Furnished
236ZQAHX-*6 (5)	250	Opp	138			328564X	Furnished	236XQAHX-*6 (5)	250	Opp	138				Furnished
236ZUAHX-*6 (5)	225	Opp	158			328564X	Furnished	236XUAHX-*6 (5)	225	Opp	158				Furnished
885XBAHX-*6 (13)	500	Opp	52				Furnished								
885XGAHX-*6 (15)	500	Opp	67				Furnished								
885XJAHX-*6 (16)	500	Opp	79				Furnished								
885XMAHX-*6 (17)	500	Opp	92				Furnished								

Continued Next Page

CAUTION: Do not use geared adapters with 442 "A" and "C" ratios.

CAUTION: 660/680 Series: Applications above 1500 RPM output shaft speed, contact Chelsea Technical Service for approval.

NOTE: All P.T.O.s on R.H. side require assembly arrangement "6" to put output shaft above center. This will clear the bulge in the transmission. A direct mount pump will interfere with the bulge.

NOTE: The AK & XK output flanges can not be used with the "A" & "C" ratios on the 489 Series P.T.O.s due to mounting stud interference. Use a RA or RB rotatable flange for the XK and the RA for the AK flange.

NOTE: If Ordering the 230/231 Series with the Shaft Brake Option, order the "BA" Output for Automatic Transmissions and the "BD" Output for Manual Transmissions.

(2) Filler block furnished with P.T.O.
(5) Input Gear Part No. 5-P-1004
(9) Input Gear Part No. 5-P-285
(10) Input Gear Part No. 5-P-283
(11) Input Gear Part No. 5-P-721
(12) Input Gear Part No. 5-P-1395
(13) Input Gear Part No. 5-P-1100
(14) Input Gear Part No. 5-P-1101
(15) Input Gear Part No. 5-P-1135
(16) Input Gear Part No. 5-P-1102
(17) Input Gear Part No. 5-P-1103
(18) Input Gear Part No. 5-P-1385
(19) Input Gear Part No. 5-P-1104
(20) Input Gear Part No. 5-P-1105

January 2008

Parker Hannifin Corporation
Chelsea Products Division
Olive Branch, MS 38654 USA

RTO-6610
RTO-6613

BOTTOM SIDE ONLY	RIGHT SIDE ONLY
TRANSMISSION GEAR DATA: BOT 8-Bolt Opening Gear REAR of Centerline 33 Teeth - SPUR **PITCH LINE TO APERTURE FACE:** .8050" (20.4500MM)	**TRANSMISSION GEAR DATA:** R.H. 6-Bolt Opening Gear REAR of Centerline 33 Teeth - SPUR **PITCH LINE TO APERTURE FACE:** 1.0850" (27.5600MM)

Caution: Application Approval Required for P.T.O. Output Shaft Speeds Above 2500 R.P.M.

BOTTOM Side P.T.O. Model	Inter. Torq.	Dir. Rot.	Engine % Hi	Engine % Rev	Filler Block	Adapter Assy.	Stud Kit	RIGHT Side P.T.O. Model	Inter. Torq.	Dir. Rot.	Engine % Hi	Engine % Rev	Filler Block	Adapter Assy.	Stud Kit
ONE SPEED - FORWARD & REVERSE															
340SFAHX-*4 (21)	200	Opp	67	70	7-A-032(P)	310778X	Furnished	340XFAHX-*4 (21)	200	Opp	67	70	7-A-140 (2)		Furnished
352ZSAHX-*6 (5)	140	Opp	149	192		328564X	Furnished	352XSAHX-*6 (5)	140	Opp	149	192			Furnished
863XBAHX-*4	500	Opp	52	64			Furnished								
ONE SPEED - DUAL SHAFT															
452ZSAHX-*6 (5)	140	Opp	149			328564X	Furnished	452XSAHX-*6 (5)	140	Eng	149		7-A-2000(T)	328530-1X	7170-31X
GEARED ADAPTERS															
628XAHX-4AH							Furnished	626XAHX-4AH							Furnished
								630XAHX-4AH							Furnished
								645XAHX-4AH							Furnished

CAUTION: Do not use geared adapters with 442 "A" and "C" ratios.

CAUTION: 660/680 Series: Applications above 1500 RPM output shaft speed, contact Chelsea Technical Service for approval.

NOTE: All P.T.O.s on R.H. side require assembly arrangement "6" to put output shaft above center. This will clear the bulge in the transmission. A direct mount pump will interfere with the bulge.

NOTE: The AK & XK output flanges can not be used with the "A" & "C" ratios on the 489 Series P.T.O.s due to mounting stud interference. Use a RA or RB rotatable flange for the XK and the RA for the AK flange.

NOTE: If Ordering the 230/231 Series with the Shaft Brake Option, order the "BA" Output for Automatic Transmissions and the "BD" Output for Manual Transmissions.

(2) Filler block furnished with P.T.O.
(5) Input Gear Part No. 5-P-1004
(21) Input Gear Part No. 5-P-581

Parker Hannifin Corporation
Chelsea Products Division
Olive Branch, MS 38654 USA

F-6405B-DM3	RTAO-14710B-AC	RTAO-16710B-AS	RTO-12710B-AS2	RTO-14908LL	RTO-16908LL	RTX-12609P	RTX-14708LL
RTAO-10710B-AC	RTAO-14710B-AC	RTO-10710B-AS2	RTO-12910B-AS2	RTO-14910B-AS2	RTO-16910B-AS2	RTX-12609R	RTX-14710B
RTAO-10710B-AS	RTAO-14710B-AS	RTO-10910B-AS2	RTO-12910B-AS2	RTO-14910B-AS3	RTO-16910B-AS3	RTX-13710B	RTX-16710B
RTAO-12710B-AC	RTAO-16710B-AC	RTO-10910B-AS3	RTO-12910B-AS3	RTO-16710B	RTX-11609P	RTX-13710B	
RTAO-12710B-AS	RTAO-16710B-AC	RTO-11908LL	RTO-14710B-AS2	RTO-16710B-AS2	RTX-11609R	RTX-14609R	

BOTTOM SIDE ONLY

TRANSMISSION GEAR DATA:

BOT 8-Bolt Opening Gear FORWARD of Centerline

47 Teeth - SPUR

PITCH LINE TO APERTURE FACE:

.8050" (20.4500MM)

RIGHT SIDE ONLY

TRANSMISSION GEAR DATA:

R.H. 6-Bolt Opening Gear FORWARD of Centerline

45 Teeth - SPUR

PITCH LINE TO APERTURE FACE:

1.0850" (27.5600MM)

Caution: Application Approval Required for P.T.O. Output Shaft Speeds Above 2500 R.P.M.

BOTTOM Side P.T.O. Model	Inter. Torq.	Dir. Rot.	Engine % Hi	Engine % Rev	Filler Block	Adapter Assy.	Stud Kit	RIGHT Side P.T.O. Model	Inter. Torq.	Dir. Rot.	Engine % Hi	Engine % Rev	Filler Block	Adapter Assy.	Stud Kit
ONE SPEED - SINGLE GEAR - MECHANICAL SHIFT															
100XRAHX-*3 (1)	125	Eng	185			328481X	Furnished	100XRAHX-*3 (1)	125	Opp	177			329138X	Furnished
812XKAHX-*3	268	Eng	123				Furnished								
ONE SPEED - TWO GEAR - MECHANICAL SHIFT															
221ZCAHX-*3	250	Opp	82		7-A-032(P)(2)	328564X	Furnished	221XCAHX-*3	250	Opp	79		7-A-032 (2)		Furnished
221ZEAHX-*3	250	Opp	95			328564X	Furnished	221XEAHX-*3	250	Opp	91				Furnished
221ZLAHX-*3	200	Opp	128			328564X	Furnished	221XLAHX-*3	200	Opp	122				Furnished
221ZPAHX-*3	200	Opp	154			328564X	Furnished	221XPAHX-*3	200	Opp	148				Furnished
442ZAAHX-*3 (4)	250	Opp	72			328564X	Furnished	442XAAHX-*3 (4)	250	Opp	69				Furnished
442ZCAHX-*3 (5)	250	Opp	93			328564X	Furnished	442XBAHX-*3 (3)	250	Eng	69			REQUIRED	Furnished
442ZFAHX-*3 (6)	250	Opp	114			328564X	Furnished	442XCAHX-*3 (5)	250	Opp	89				Furnished
442ZHAHX-*3 (7)	250	Opp	132			328564X	Furnished	442XFAHX-*3 (6)	250	Opp	110				Furnished
442ZLAHX-*3 (8)	222	Opp	148			328564X	Furnished	442XHAHX-*3 (7)	250	Opp	127				Furnished
442ZQAHX-*3 (8)	206	Opp	160			328564X	Furnished	442XLAHX-*3 (8)	233	Opp	142				Furnished
442ZRAHX-*3 (8)	178	Opp	185			328564X	Furnished	442XQAHX-*3 (8)	216	Opp	153				Furnished
442ZSAHX-*3 (8)	150	Opp	220			328564X	Furnished	442XRAHX-*3 (8)	187	Opp	177				Furnished
442ZUAHX-*3 (8)	126	Opp	262			328564X	Furnished	442XSAHX-*3 (8)	156	Opp	211				Furnished
442ZWAHX-*3 (8)	107	Opp	308			328564X	Furnished	442XUAHX-*3 (8)	132	Opp	251				Furnished
442ZXAHX-*3 (8)	91	Opp	365			328564X	Furnished	442XWAHX-*3 (8)	112	Opp	295				Furnished
489XAAHX-*3 (4)	250	Opp	72				Furnished	442XXAHX-*3 (8)	94	Opp	349				Furnished
489XCAHX-*3 (5)	250	Opp	93				Furnished	660XFAHX-*3 (9)	301	Opp	110				Furnished
489XFAHX-*3 (6)	250	Opp	114				Furnished	660XQAHX-*3 (10)	216	Opp	153				Furnished
489XHAHX-*3 (7)	250	Opp	132				Furnished	660XSAHX-*3 (11)	156	Opp	211				Furnished
489XLAHX-*3 (8)	222	Opp	148				Furnished								
489XQAHX-*3 (8)	206	Opp	160				Furnished								
489XRAHX-*3 (8)	178	Opp	185				Furnished								
489XSAHX-*3 (8)	150	Opp	220				Furnished								
489XUAHX-*3 (8)	126	Opp	262				Furnished								
489XWAHX-*3 (8)	107	Opp	308				Furnished								

Continued Next Page

CAUTION: Eaton Transmission Division has established a Maximum Torque Limit for the Transmission P.T.O. Driver Gear. For all RT/RTO/RTLO transmissions the torque limit is 350 Ft-lbs [475 N.m] unless the transmission has been upgraded to a roller type input shaft bearing, Eaton part number 4301417, then 500 Ft-lbs [678 N.m] torque becomes the Maximum limit. All torque limits on this application page reflect the 350 Ft-lbs [475 N.m] limit at the Transmission P.T.O. Drive Gear. Refer to the Chelsea P.T.O. Torque Limit Chart in the front section of this catalog for complete torque limit information.

CAUTION: Do Not Use Geared Adapters with 442 "A" and "C" ratios.

CAUTION: 660/680 Series: Applications above 1500 RPM output shaft speed, contact Chelsea Technical Service for approval.

NOTE: The 100 series will not mount on the right side without an adapter gear due to output shaft interference with transmission housing.

NOTE: The AK & XK output flanges can not be used with the "A" & "C" ratios on the 489 Series P.T.O.s due to mounting stud interference. Use a RA or RB rotatable flange for the XK and the RA for the AK flange.

NOTE: If Ordering the 230/231 Series with the Shaft Brake Option, order the "BA" Output for Automatic Transmissions and the "BD" Output for Manual Transmissions.

NOTE: The 422XBAH Must use one of the Geared Adapters Listed on the Application Page. Direction of Rotation Shown is the Final Output Shaft Rotation w/ Geared Adapter.

(1) Gear and Shaft Kit No. KXA-2-P-565
(2) Filler block furnished with P.T.O.
(3) Input Gear Part No. 5-P-1418
(4) Input Gear Part No. 5-P-1280
(5) Input Gear Part No. 5-P-1287
(6) Input Gear Part No. 5-P-1077
(7) Input Gear Part No. 5-P-1364
(8) Input Gear Part No. 5-P-1004
(9) Input Gear Part No. 5-P-1242
(10) Input Gear Part No. 5-P-1246
(11) Input Gear Part No. 5-P-1322

Parker Hannifin Corporation
Chelsea Products Division
Olive Branch, MS 38654 USA

F-6405B-DM3	RTAO-14710B-AC	RTAO-16710B-AS	RTO-12710B-AS2	RTO-14908LL	RTO-16908LL	RTX-12609P	RTX-14708LL
RTAO-10710B-AC	RTAO-14710B-AC	RTO-10710B-AS2	RTO-12910B-AS2	RTO-14910B-AS2	RTO-16910B-AS2	RTX-12609R	RTX-14710B
RTAO-10710B-AS	RTAO-14710B-AS	RTO-10910B-AS2	RTO-12910B-AS2	RTO-14910B-AS3	RTO-16910B-AS3	RTX-13710B	RTX-16710B
RTAO-12710B-AC	RTAO-16710B-AC	RTO-10910B-AS3	RTO-12910B-AS3	RTO-16710B	RTX-11609P	RTX-13710B	
RTAO-12710B-AS	RTAO-16710B-AC	RTO-11908LL	RTO-14710B-AS2	RTO-16710B-AS2	RTX-11609R	RTX-14609R	

BOTTOM SIDE ONLY

TRANSMISSION GEAR DATA:

BOT 8-Bolt Opening Gear FORWARD of Centerline

47 Teeth - SPUR

PITCH LINE TO APERTURE FACE:

.8050" (20.4500MM)

RIGHT SIDE ONLY

TRANSMISSION GEAR DATA:

R.H. 6-Bolt Opening Gear FORWARD of Centerline

45 Teeth - SPUR

PITCH LINE TO APERTURE FACE:

1.0850" (27.5600MM)

Caution: Application Approval Required for P.T.O. Output Shaft Speeds Above 2500 R.P.M.

BOTTOM Side P.T.O. Model	Inter. Torq.	Dir. Rot.	Engine % Hi	Engine % Rev	Filler Block	Adapter Assy.	Stud Kit	RIGHT Side P.T.O. Model	Inter. Torq.	Dir. Rot.	Engine % Hi	Engine % Rev	Filler Block	Adapter Assy.	Stud Kit
ONE SPEED - TWO GEAR - MECHANICAL SHIFT															
489XXAHX-*3 (8)	91	Opp	365				Furnished								
680XFAHX-*3 (9)	288	Opp	114				Furnished								
680XQAHX-*3 (10)	206	Opp	160				Furnished								
680XSAHX-*3 (11)	150	Opp	220				Furnished								
823XBAHX-*3 (12)	423	Opp	78				Furnished								
823XJAHX-*3 (13)	279	Opp	118				Furnished								
823XMAHX-*3 (14)	238	Opp	139				Furnished								
823XRAHX-*3 (15)	172	Opp	191				Furnished								
823XTKTX-*3 (16)	142	Opp	231		8-A-165 (2)		Furnished								
880XBAHX-*3 (17)	423	Opp	78				Furnished								
880XDAHX-*3 (18)	357	Opp	92				Furnished								
880XGAHX-*3 (19)	329	Opp	100				Furnished								
880XJAHX-*3 (20)	279	Opp	118				Furnished								
880XMAHX-*3 (21)	238	Opp	139				Furnished								
880XQAHX-*3 (22)	203	Opp	162				Furnished								
880XRAHX-*3 (23)	172	Opp	191				Furnished								
880XTAHX-*3 (24)	134	Opp	246				Furnished								
ONE SPEED - TWO GEAR - POWERSHIFT (AIR)															
230XAAJX-*3	250	Opp	60		328481X	Furnished		230XAAJX-*3	250	Opp	58		Furnished		
230XBAJX-*3	250	Opp	78		328481X	Furnished		230XBAJX-*3	250	Opp	75		Furnished		
230XDAJX-*3	250	Opp	91		328481X	Furnished		230XDAJX-*3	250	Opp	87		Furnished		
230XKAJX-*3	250	Opp	123		328481X	Furnished		230XKAJX-*3	250	Opp	117		Furnished		
230XQAJX-*3	203	Opp	163		328481X	Furnished		230XQAJX-*3	212	Opp	156		Furnished		
230XUAJX-*3	126	Opp	261		328481X	Furnished		230XUAJX-*3	132	Opp	250		Furnished		
236ZDAHX-*3 (8)	250	Opp	120		328564X	Furnished		236XDAHX-*3 (8)	250	Opp	115		Furnished		
236ZKAHX-*3 (8)	215	Opp	154		328564X	Furnished		236XKAHX-*3 (8)	224	Opp	147		Furnished		
236ZQAHX-*3 (8)	160	Opp	207		328564X	Furnished		236XQAHX-*3 (8)	166	Opp	198		Furnished		
236ZUAHX-*3 (8)	139	Opp	237		328564X	Furnished		236XUAHX-*3 (8)	145	Opp	227		Furnished		

Continued Next Page

CAUTION: Eaton Transmission Division has established a Maximum Torque Limit for the Transmission P.T.O. Driver Gear. For all RT/RTO/RTLO transmissions the torque limit is 350 Ft-lbs [475 N.m] unless the transmission has been upgraded to a roller type input shaft bearing, Eaton part number 4301417, then 500 Ft-lbs [678 N.m] torque becomes the Maximum limit. All torque limits on this application page reflect the 350 Ft-lbs [475 N.m] limit at the Transmission P.T.O. Drive Gear. Refer to the Chelsea P.T.O. Torque Limit Chart in the front section of this catalog for complete torque limit information.

CAUTION: Do Not Use Geared Adapters with 442 "A" and "C" ratios.

CAUTION: 660/680 Series: Applications above 1500 RPM output shaft speed, contact Chelsea Technical Service for approval.

NOTE: The 100 series will not mount on the right side without an adapter gear due to output shaft interference with transmission housing.

NOTE: The AK & XK output flanges can not be used with the "A" & "C" ratios on the 489 Series P.T.O.s due to mounting stud interference. Use a RA or RB rotatable flange for the XK and the RA for the AK flange.

NOTE: If Ordering the 230/231 Series with the Shaft Brake Option, order the "BA" Output for Automatic Transmissions and the "BD" Output for Manual Transmissions.

NOTE: The 422XBAH Must use one of the Geared Adapters Listed on the Application Page. Direction of Rotation Shown is the Final Output Shaft Rotation w/ Geared Adapter.

(2) Filler block furnished with P.T.O.
(8) Input Gear Part No. 5-P-1004
(9) Input Gear Part No. 5-P-1242
(10) Input Gear Part No. 5-P-1246
(11) Input Gear Part No. 5-P-1322
(12) Input Gear Part No. 5-P-285
(13) Input Gear Part No. 5-P-325
(14) Input Gear Part No. 5-P-283
(15) Input Gear Part No. 5-P-721
(16) Input Gear Part No. 5-P-1395
(17) Input Gear Part No. 5-P-1100
(18) Input Gear Part No. 5-P-1101
(19) Input Gear Part No. 5-P-1135
(20) Input Gear Part No. 5-P-1102
(21) Input Gear Part No. 5-P-1103
(22) Input Gear Part No. 5-P-1385
(23) Input Gear Part No. 5-P-1104
(24) Input Gear Part No. 5-P-1105

F-6405B-DM3	RTAO-14710B-AC	RTAO-16710B-AS	RTO-12710B-AS2	RTO-14908LL	RTO-16908LL	RTX-12609P	RTX-14708LL
RTAO-10710B-AC	RTAO-14710B-AC	RTO-10710B-AS2	RTO-12910B-AS2	RTO-14910B-AS2	RTO-16910B-AS2	RTX-12609R	RTX-14710B
RTAO-10710B-AS	RTAO-14710B-AS	RTO-10910B-AS2	RTO-12910B-AS2	RTO-14910B-AS3	RTO-16910B-AS3	RTX-13710B	RTX-16710B
RTAO-12710B-AC	RTAO-16710B-AC	RTO-10910B-AS3	RTO-12910B-AS3	RTO-16710B	RTX-11609P	RTX-13710B	
RTAO-12710B-AS	RTAO-16710B-AC	RTO-11908LL	RTO-14710B-AS2	RTO-16710B-AS2	RTX-11609R	RTX-14609R	

BOTTOM SIDE ONLY

TRANSMISSION GEAR DATA:

BOT 8-Bolt Opening Gear FORWARD of Centerline

47 Teeth - SPUR

PITCH LINE TO APERTURE FACE:

.8050" (20.4500MM)

RIGHT SIDE ONLY

TRANSMISSION GEAR DATA:

R.H. 6-Bolt Opening Gear FORWARD of Centerline

45 Teeth - SPUR

PITCH LINE TO APERTURE FACE:

1.0850" (27.5600MM)

Caution: Application Approval Required for P.T.O. Output Shaft Speeds Above 2500 R.P.M.

BOTTOM Side P.T.O. Model	Inter. Torq.	Dir. Rot.	Engine % Hi	Engine % Rev	Filler Block	Adapter Assy.	Stud Kit	RIGHT Side P.T.O. Model	Inter. Torq.	Dir. Rot.	Engine % Hi	Engine % Rev	Filler Block	Adapter Assy.	Stud Kit
ONE SPEED - TWO GEAR - POWERSHIFT (AIR)															
885XBAHX-*3 (17)	423	Opp	78				Furnished								
885XGAHX-*3 (19)	329	Opp	100				Furnished								
885XJAHX-*3 (20)	279	Opp	118				Furnished								
885XMAHX-*3 (21)	238	Opp	139				Furnished								
ONE SPEED - FORWARD & REVERSE															
340SFAHX-*5 (25)	200	Opp	100	105	7-A-032(P) 7-A-140 (26)	310778X	Furnished	340XFAHX-*5 (25)	200	Opp	96	101	7-A-140 (2)		Furnished
352ZSAHX-*3 (8)	140	Opp	223	288		328564X	Furnished	352XSAHX-*3 (8)	140	Opp	213	276			Furnished
863XBAHX-*5	423	Opp	78	97			Furnished								
ONE SPEED - DUAL SHAFT															
452ZSAHX-*3 (8)	140	Opp	223			328564X	Furnished	452XSAHX-*3 (8)	140	Opp	213				Furnished
GEARED ADAPTERS															
628XAHX-3AH					8-A-032		Furnished	626XAHX-3AH							Furnished
								630XAHX-3AH							Furnished
								645XAHX-3AH							Furnished

Continued Next Page

CAUTION: Eaton Transmission Division has established a Maximum Torque Limit for the Transmission P.T.O. Driver Gear. For all RT/RTO/RTLO transmissions the torque limit is 350 Ft-lbs [475 N.m] unless the transmission has been upgraded to a roller type input shaft bearing, Eaton part number 4301417, then 500 Ft-lbs [678 N.m] torque becomes the Maximum limit. All torque limits on this application page reflect the 350 Ft-lbs [475 N.m] limit at the Transmission P.T.O. Drive Gear. Refer to the Chelsea P.T.O. Torque Limit Chart in the front section of this catalog for complete torque limit information.

CAUTION: Do Not Use Geared Adapters with 442 "A" and "C" ratios.

CAUTION: 660/680 Series: Applications above 1500 RPM output shaft speed, contact Chelsea Technical Service for approval.

NOTE: The 100 series will not mount on the right side without an adapter gear due to output shaft interference with transmission housing.

NOTE: The AK & XK output flanges can not be used with the "A" & "C" ratios on the 489 Series P.T.O.s due to mounting stud interference. Use a RA or RB rotatable flange for the XK and the RA for the AK flange.

NOTE: If Ordering the 230/231 Series with the Shaft Brake Option, order the "BA" Output for Automatic Transmissions and the "BD" Output for Manual Transmissions.

NOTE: The 422XBAH Must use one of the Geared Adapters Listed on the Application Page. Direction of Rotation Shown is the Final Output Shaft Rotation w/ Geared Adapter.

(2) Filler block furnished with P.T.O.
(8) Input Gear Part No. 5-P-1004
(17) Input Gear Part No. 5-P-1100
(19) Input Gear Part No. 5-P-1135
(20) Input Gear Part No. 5-P-1102
(21) Input Gear Part No. 5-P-1103
(25) Input Gear Part No. 5-P-581
(26) Filler block furnished with P.T.O. but not required

F-6405B-DM3	RTAO-14710B-AC	RTAO-16710B-AS	RTO-12710B-AS2	RTO-14908LL	RTO-16908LL	RTX-12609P	RTX-14708LL
RTAO-10710B-AC	RTAO-14710B-AC	RTO-10710B-AS2	RTO-12910B-AS2	RTO-14910B-AS2	RTO-16910B-AS2	RTX-12609R	RTX-14710B
RTAO-10710B-AS	RTAO-14710B-AS	RTO-10910B-AS2	RTO-12910B-AS2	RTO-14910B-AS3	RTO-16910B-AS3	RTX-13710B	RTX-16710B
RTAO-12710B-AC	RTAO-16710B-AC	RTO-10910B-AS3	RTO-12910B-AS3	RTO-16710B	RTX-11609P	RTX-13710B	
RTAO-12710B-AS	RTAO-16710B-AC	RTO-11908LL	RTO-14710B-AS2	RTO-16710B-AS2	RTX-11609R	RTX-14609R	

REAR SIDE ONLY | **RIGHT SIDE ONLY**

TRANSMISSION GEAR DATA:

REAR -Bolt Opening Gear NON-STANDARD of Centerline

58 Teeth - SPUR

PITCH LINE TO APERTURE FACE:

.0000" (.0000MM)

Caution: Application Approval Required for P.T.O. Output Shaft Speeds Above 2500 R.P.M.

REAR MOUNT & THRUSHAFT

REAR Side P.T.O. Model	Inter. Torq.	Dir. Rot.	Engine % Hi	Engine % Rev	Filler Block	Adapter Assy.	Stud Kit	RIGHT Side P.T.O. Model	Inter. Torq.	Dir. Rot.	Engine % Hi	Engine % Rev	Filler Block	Adapter Assy.	Stud Kit
541-LAT	400	Eng	91				Furnished								
541-LAU	400	Eng	91				Furnished								
541-LBD	400	Eng	91				Furnished								
541-MAT	350	Eng	117				Furnished								
541-MAU	350	Eng	117				Furnished								
541-MBD	350	Eng	117				Furnished								
541-NAT	300	Eng	133				Furnished								
541-NAU	300	Eng	133				Furnished								
541-NBD	300	Eng	133				Furnished								

CAUTION: Eaton Transmission Division has established a Maximum Torque Limit for the Transmission P.T.O. Driver Gear. For all RT/RTO/RTLO transmissions the torque limit is 350 Ft-lbs [475 N.m] unless the transmission has been upgraded to a roller type input shaft bearing, Eaton part number 4301417, then 500 Ft-lbs [678 N.m] torque becomes the Maximum limit. All torque limits on this application page reflect the 350 Ft-lbs [475 N.m] limit at the Transmission P.T.O. Drive Gear. Refer to the Chelsea P.T.O. Torque Limit Chart in the front section of this catalog for complete torque limit information.

CAUTION: Do Not Use Geared Adapters with 442 "A" and "C" ratios.

CAUTION: 660/680 Series: Applications above 1500 RPM output shaft speed, contact Chelsea Technical Service for approval.

NOTE: The 100 series will not mount on the right side without an adapter gear due to output shaft interference with transmission housing.

NOTE: The AK & XK output flanges can not be used with the "A" & "C" ratios on the 489 Series P.T.O.s due to mounting stud interference. Use a RA or RB rotatable flange for the XK and the RA for the AK flange.

NOTE: If Ordering the 230/231 Series with the Shaft Brake Option, order the "BA" Output for Automatic Transmissions and the "BD" Output for Manual Transmissions.

NOTE: The 422XBAH Must use one of the Geared Adapters Listed on the Application Page. Direction of Rotation Shown is the Final Output Shaft Rotation w/ Geared Adapter.

FO-16D313E-LEP	RTAO-12710C-AS	RTLO-12913A	RTLO-14913-T2	RTLO-14918B-AS	RTLO-16913-T2	RTLO-16918A-AS2	RTLO-18718B-T2
FOM-16D313E-LEP	RTAO-14710C-AC	RTLO-14713A	RTLO-14913A	RTLO-16713A	RTLO-16913A	RTLO-16918A-AS3	RTLO-18913A
RTAO-10710C-AC	RTAO-14710C-AS	RTLO-14713A-T2	RTLO-14918A-AS2	RTLO-16713A-T2	RTLO-16913L-DM3	RTLO-16918B	RTLO-18913A-T2
RTAO-10710C-AS	RTAO-16710C-AS	RTLO-14718B	RTLO-14918A-AS3	RTLO-16718B	RTLO-16913L-LHP	RTLO-16918B-AS	RTLO-18918A-AS2
RTAO-12710C-AC	RTLO-12713A	RTLO-14718B-T2	RTLO-14918B	RTLO-16718B-T2	RTLO-16913LHS-D	RTLO-18718B	RTLO-18918B

BOTTOM SIDE ONLY

TRANSMISSION GEAR DATA:

BOT 8-Bolt Opening Gear FORWARD of Centerline

47 Teeth - SPUR

PITCH LINE TO APERTURE FACE:

.8050" (20.4500MM)

RIGHT SIDE ONLY

TRANSMISSION GEAR DATA:

R.H. 6-Bolt Opening Gear FORWARD of Centerline

45 Teeth - SPUR

PITCH LINE TO APERTURE FACE:

1.0850" (27.5600MM)

Caution: Application Approval Required for P.T.O. Output Shaft Speeds Above 2500 R.P.M.

BOTTOM Side P.T.O. Model	Inter. Torq.	Dir. Rot.	Engine % Hi	Engine % Rev	Filler Block	Adapter Assy.	Stud Kit	RIGHT Side P.T.O. Model	Inter. Torq.	Dir. Rot.	Engine % Hi	Engine % Rev	Filler Block	Adapter Assy.	Stud Kit
ONE SPEED - SINGLE GEAR - MECHANICAL SHIFT															
								100XRAHX-*3 (1)	125	Opp	148		7-A-2000(T)	329138X	Furnished
ONE SPEED - TWO GEAR - MECHANICAL SHIFT															
442ZAAHX-*3 (4)	250	Opp	61			328564X	Furnished	221XCAHX-*3	250	Eng	66		7-A-032(P)(2)	329138X	Furnished
442ZCAHX-*3 (5)	250	Opp	78			328564X	Furnished	221XEAHX-*3	250	Eng	76			329138X	Furnished
442ZFAHX-*3 (6)	250	Opp	96			328564X	Furnished	221XLAHX-*3	200	Eng	102			329138X	Furnished
442ZHAHX-*3 (7)	250	Opp	111			328564X	Furnished	221XPAHX-*3	200	Eng	124			329138X	Furnished
442ZLAHX-*3 (8)	222	Opp	124			328564X	Furnished	442XBAHX-*3 (3)	250	Eng	58			REQUIRED	Furnished
442ZQAHX-*3 (8)	206	Opp	134			328564X	Furnished	442XAAHX-*3 (4)	250	Opp	58				Furnished
442ZRAHX-*3 (8)	178	Opp	155			328564X	Furnished	442XCAHX-*3 (5)	250	Opp	74				Furnished
442ZSAHX-*3 (8)	150	Opp	184			328564X	Furnished	442XFAHX-*3 (6)	250	Opp	92				Furnished
489XAAHX-*3 (4)	250	Opp	61				Furnished	442XHAHX-*3 (7)	250	Opp	107				Furnished
489XCAHX-*3 (5)	250	Opp	78				Furnished	442XLAHX-*3 (8)	233	Opp	119				Furnished
489XFAHX-*3 (6)	250	Opp	96				Furnished	442XQAHX-*3 (8)	216	Opp	128				Furnished
489XHAHX-*3 (7)	250	Opp	111				Furnished	442XRAHX-*3 (8)	187	Opp	148				Furnished
489XLAHX-*3 (8)	222	Opp	124				Furnished	660XFAHX-*3 (9)	301	Opp	92				Furnished
489XQAHX-*3 (8)	206	Opp	134				Furnished	660XQAHX-*3 (10)	216	Opp	128				Furnished
489XRAHX-*3 (8)	178	Opp	155				Furnished								
489XSAHX-*3 (8)	150	Opp	184				Furnished								
680XFAHX-*3 (9)	288	Opp	96				Furnished								
680XQAHX-*3 (10)	206	Opp	134				Furnished								
680XSAHX-*3 (11)	150	Opp	184				Furnished								
823XBAHX-*3 (12)	423	Opp	65				Furnished								
823XJAHX-*3 (13)	279	Opp	99				Furnished								
823XMAHX-*3 (14)	238	Opp	116				Furnished								
823XRAHX-*3 (15)	172	Opp	160				Furnished								
823XTKTX-*3 (16)	142	Opp	194		8-A-165(T)(2)		Furnished								
880XBAHX-*3 (17)	423	Opp	65				Furnished								
880XDAHX-*3 (18)	357	Opp	77				Furnished								
880XGAHX-*3 (19)	329	Opp	84				Furnished								
880XJAHX-*3 (20)	279	Opp	99				Furnished								

Continued Next Page

CAUTION: Eaton Transmission Division has established a Maximum Torque Limit for the Transmission P.T.O. Driver Gear. For all RT/RTO/RTLO transmissions the torque limit is 350 Ft-lbs [475 N.m] unless the transmission has been upgraded to a roller type input shaft bearing, Eaton part number 4301417, then 500 Ft-lbs [678 N.m] torque becomes the Maximum limit. All torque limits on this application page reflect the 350 Ft-lbs [475 N.m] limit at the Transmission P.T.O. Drive Gear. Refer to the Chelsea P.T.O. Torque Limit Chart in the front section of this catalog for complete torque limit information.

CAUTION: Do not use geared adapters with 442 "A" and "C" ratios.

CAUTION: 660/680 Series: Applications above 1500 RPM output shaft speed, contact Chelsea Technical Service for approval.

NOTE: The 880 Series "T" ratio will interfere with the adjacent gear in the transmission on the bottom opening.

NOTE: The 442 and 489 Series ratios "U","W",&"X" will interfere with the adjaceant gear in the transmission on the bottom opening.

NOTE: The 442 Series ratios "S","U","W" and "X" will interfere with the adjacent gear in the transmission on the right opening.

NOTE: The AK & XK output flanges can not be used with the "A" & "C" ratios on the 489 Series P.T.O.s due to mounting stud interference. Use a RA or RB rotatable flange for the XK and the RA for the AK flange.

NOTE: If Ordering the 230/231 Series with the Shaft Brake Option, order the "BA" Output for Automatic Transmissions and the "BD" Output for Manual Transmissions.

NOTE: The 422XBAH Must Used One of the Geared Adapters Listed on the Application Page. Direction of Rotation Shown is the Final Output Shaft Rotation w/ Geared Adapter.

(1) Gear and Shaft Kit No. KXA-2-P-565
(2) Filler block furnished with P.T.O.
(3) Input Gear Part No. 5-P-1418
(4) Input Gear Part No. 5-P-1280
(5) Input Gear Part No. 5-P-1287
(6) Input Gear Part No. 5-P-1077
(7) Input Gear Part No. 5-P-1364
(8) Input Gear Part No. 5-P-1004
(9) Input Gear Part No. 5-P-1242
(10) Input Gear Part No. 5-P-1246
(11) Input Gear Part No. 5-P-1322
(12) Input Gear Part No. 5-P-285
(13) Input Gear Part No. 5-P-325
(14) Input Gear Part No. 5-P-283
(15) Input Gear Part No. 5-P-721
(16) Input Gear Part No. 5-P-1395
(17) Input Gear Part No. 5-P-1100
(18) Input Gear Part No. 5-P-1101
(19) Input Gear Part No. 5-P-1135
(20) Input Gear Part No. 5-P-1102

FO-16D313E-LEP	RTAO-12710C-AS	RTLO-12913A	RTLO-14913-T2	RTLO-14918B-AS	RTLO-16913-T2	RTLO-16918A-AS2	RTLO-18718B-T2
FOM-16D313E-LEP	RTAO-14710C-AC	RTLO-14713A	RTLO-14913A	RTLO-16713A	RTLO-16913A	RTLO-16918A-AS3	RTLO-18913A
RTAO-10710C-AC	RTAO-14710C-AS	RTLO-14713A-T2	RTLO-14918A-AS2	RTLO-16713A-T2	RTLO-16913L-DM3	RTLO-16918B	RTLO-18913A-T2
RTAO-10710C-AS	RTAO-16710C-AS	RTLO-14718B	RTLO-14918A-AS3	RTLO-16718B	RTLO-16913L-LHP	RTLO-16918B-AS	RTLO-18918A-AS2
RTAO-12710C-AC	RTLO-12713A	RTLO-14718B-T2	RTLO-14918B	RTLO-16718B-T2	RTLO-16913LHS-D	RTLO-18718B	RTLO-18918B

BOTTOM SIDE ONLY

TRANSMISSION GEAR DATA:
BOT 8-Bolt Opening Gear FORWARD of Centerline
47 Teeth - SPUR
PITCH LINE TO APERTURE FACE:
.8050" (20.4500MM)

RIGHT SIDE ONLY

TRANSMISSION GEAR DATA:
R.H. 6-Bolt Opening Gear FORWARD of Centerline
45 Teeth - SPUR
PITCH LINE TO APERTURE FACE:
1.0850" (27.5600MM)

Caution: Application Approval Required for P.T.O. Output Shaft Speeds Above 2500 R.P.M.

BOTTOM Side P.T.O. Model	Inter. Torq.	Dir. Rot.	Engine % Hi	Engine % Rev	Filler Block	Adapter Assy.	Stud Kit	RIGHT Side P.T.O. Model	Inter. Torq.	Dir. Rot.	Engine % Hi	Engine % Rev	Filler Block	Adapter Assy.	Stud Kit
ONE SPEED - TWO GEAR - MECHANICAL SHIFT															
880XMAHX-*3 (21)	238	Opp	116				Furnished								
880XQAHX-*3 (22)	203	Opp	136				Furnished								
880XRAHX-*3 (23)	172	Opp	160				Furnished								
ONE SPEED - TWO GEAR - POWERSHIFT (AIR)															
230XAAJX-*3	250	Opp	50			328481X	Furnished	230XAAJX-*3	250	Opp	48				Furnished
230XBAJX-*3	250	Opp	66			328481X	Furnished	230XBAJX-*3	250	Opp	63				Furnished
230XDAJX-*3	250	Opp	76			328481X	Furnished	230XDAJX-*3	250	Opp	73				Furnished
230XKAJX-*3	250	Opp	103			328481X	Furnished	230XKAJX-*3	250	Opp	98				Furnished
230XQAJX-*3	203	Opp	136			328481X	Furnished	230XQAJX-*3	212	Opp	131				Furnished
230XUAJX-*3 (24)	126	Opp	218			328481X	Furnished	230XUAJX-*3 (24)	132	Opp	210				Furnished
236ZDAHX-*3 (8)	250	Opp	100			328564X	Furnished	236XDAHX-*3 (8)	250	Opp	96				Furnished
236ZKAHX-*3 (8)	215	Opp	129			328564X	Furnished	236XKAHX-*3 (8)	224	Opp	123				Furnished
885XBAHX-*3 (17)	423	Opp	65				Furnished								
885XGAHX-*3 (19)	329	Opp	84				Furnished								
885XJAHX-*3 (20)	279	Opp	99				Furnished								
885XMAHX-*3 (21)	238	Opp	116				Furnished								
ONE SPEED - FORWARD & REVERSE															
340SFAHX-*5 (25)	200	Opp	84	88	7-A-032(P) 7-A-140 (26)	310778X	328170-94X	340XFAHX-*5 (25)	200	Opp	80	84	7-A-140 (2)		Furnished
352ZSAHX-*3 (8)	140	Opp	187	241		328564X	Furnished	352XSAHX-*3 (8)	140	Opp	179	231			Furnished
863XBAHX-*5	423	Opp	65	81			Furnished								

Continued Next Page

CAUTION: Eaton Transmission Division has established a Maximum Torque Limit for the Transmission P.T.O. Driver Gear. For all RT/RTO/RTLO transmissions the torque limit is 350 Ft-lbs [475 N.m] unless the transmission has been upgraded to a roller type input shaft bearing, Eaton part number 4301417, then 500 Ft-lbs [678 N.m] torque becomes the Maximum limit. All torque limits on this application page reflect the 350 Ft-lbs [475 N.m] limit at the Transmission P.T.O. Drive Gear. Refer to the Chelsea P.T.O. Torque Limit Chart in the front section of this catalog for complete torque limit information.
CAUTION: Do not use geared adapters with 442 "A" and "C" ratios.
CAUTION: 660/680 Series: Applications above 1500 RPM output shaft speed, contact Chelsea Technical Service for approval.
NOTE: The 880 Series "T" ratio will interfere with the adjacent gear in the transmission on the bottom opening.
NOTE: The 442 and 489 Series ratios "U","W",&"X" will interfere with the adjaceant gear in the transmission on the bottom opening.
NOTE: The 442 Series ratios "S","U","W" and "X" will interfere with the adjacent gear in the transmission on the right opening.
NOTE: The AK & XK output flanges can not be used with the "A" & "C" ratios on the 489 Series P.T.O.s due to mounting stud interference. Use a RA or RB rotatable flange for the XK and the RA for the AK flange.
NOTE: If Ordering the 230/231 Series with the Shaft Brake Option, order the "BA" Output for Automatic Transmissions and the "BD" Output for Manual Transmissions.
NOTE: The 422XBAH Must Used One of the Geared Adapters Listed on the Application Page. Direction of Rotation Shown is the Final Output Shaft Rotation w/ Geared Adapter.

(2) Filler block furnished with P.T.O.
(8) Input Gear Part No. 5-P-1004
(17) Input Gear Part No. 5-P-1100
(19) Input Gear Part No. 5-P-1135
(20) Input Gear Part No. 5-P-1102
(21) Input Gear Part No. 5-P-1103
(22) Input Gear Part No. 5-P-1385
(23) Input Gear Part No. 5-P-1104
(24) Input Gear Part No. 5-P-1144
(25) Input Gear Part No. 5-P-581
(26) Filler block furnished with P.T.O. but not required

June 2008

Parker Hannifin Corporation
Chelsea Products Division
Olive Branch, MS 38654 USA

FO-16D313E-LEP	RTAO-12710C-AS	RTLO-12913A	RTLO-14913-T2	RTLO-14918B-AS	RTLO-16913-T2	RTLO-16918A-AS2	RTLO-18718B-T2
FOM-16D313E-LEP	RTAO-14710C-AC	RTLO-14713A	RTLO-14913A	RTLO-16713A	RTLO-16913A	RTLO-16918A-AS3	RTLO-18913A
RTAO-10710C-AC	RTAO-14710C-AS	RTLO-14713A-T2	RTLO-14918A-AS2	RTLO-16713A-T2	RTLO-16913L-DM3	RTLO-16918B	RTLO-18913A-T2
RTAO-10710C-AS	RTAO-16710C-AS	RTLO-14718B	RTLO-14918A-AS3	RTLO-16718B	RTLO-16913L-LHP	RTLO-16918B-AS	RTLO-18918A-AS2
RTAO-12710C-AC	RTLO-12713A	RTLO-14718B-T2	RTLO-14918B	RTLO-16718B-T2	RTLO-16913LHS-D	RTLO-18718B	RTLO-18918B

REAR SIDE ONLY | **RIGHT SIDE ONLY**

TRANSMISSION GEAR DATA:

REAR -Bolt Opening Gear NON-STANDARD of Centerline

52 Teeth - SPUR

PITCH LINE TO APERTURE FACE:

.0000" (.0000MM)

Caution: Application Approval Required for P.T.O. Output Shaft Speeds Above 2500 R.P.M.

REAR Side P.T.O. Model	Inter. Torq.	Dir. Rot.	Engine % Hi	Engine % Rev	Filler Block	Adapter Assy.	Stud Kit	RIGHT Side P.T.O. Model	Inter. Torq.	Dir. Rot.	Engine % Hi	Engine % Rev	Filler Block	Adapter Assy.	Stud Kit
ONE SPEED - DUAL SHAFT															
452ZSAHX-*3 (8)	140	Opp	187			328564X	Furnished	452XSAHX-*3 (8)	140	Opp	179				Furnished
GEARED ADAPTERS															
628XAHX-3AH					8-A-032		Furnished	626XAHX-3AH							Furnished
								630XAHX-3AH							Furnished
								645XAHX-3AH							Furnished

Continued Next Page

CAUTION: Eaton Transmission Division has established a Maximum Torque Limit for the Transmission P.T.O. Driver Gear. For all RT/RTO/RTLO transmissions the torque limit is 350 Ft-lbs [475 N.m] unless the transmission has been upgraded to a roller type input shaft bearing, Eaton part number 4301417, then 500 Ft-lbs [678 N.m] torque becomes the Maximum limit. All torque limits on this application page reflect the 350 Ft-lbs [475 N.m] limit at the Transmission P.T.O. Drive Gear. Refer to the Chelsea P.T.O. Torque Limit Chart in the front section of this catalog for complete torque limit information.

CAUTION: Do not use geared adapters with 442 "A" and "C" ratios.

CAUTION: 660/680 Series: Applications above 1500 RPM output shaft speed, contact Chelsea Technical Service for approval.

NOTE: The 880 Series "T" ratio will interfere with the adjacent gear in the transmission on the bottom opening.

NOTE: The 442 and 489 Series ratios "U","W",&"X" will interfere with the adjaceant gear in the transmission on the bottom opening.

NOTE: The 442 Series ratios "S","U","W" and "X" will interfere with the adjacent gear in the transmission on the right opening.

NOTE: The AK & XK output flanges can not be used with the "A" & "C" ratios on the 489 Series P.T.O.s due to mounting stud interference. Use a RA or RB rotatable flange for the XK and the RA for the AK flange.

NOTE: If Ordering the 230/231 Series with the Shaft Brake Option, order the "BA" Output for Automatic Transmissions and the "BD" Output for Manual Transmissions.

NOTE: The 422XBAH Must Used One of the Geared Adapters Listed on the Application Page. Direction of Rotation Shown is the Final Output Shaft Rotation w/ Geared Adapter.

(8) Input Gear Part No. 5-P-1004

FO-16D313E-LEP	RTAO-12710C-AS	RTLO-12913A	RTLO-14913-T2	RTLO-14918B-AS	RTLO-16913-T2	RTLO-16918A-AS2	RTLO-18718B-T2
FOM-16D313E-LEP	RTAO-14710C-AC	RTLO-14713A	RTLO-14913A	RTLO-16713A	RTLO-16913A	RTLO-16918A-AS3	RTLO-18913A
RTAO-10710C-AC	RTAO-14710C-AS	RTLO-14713A-T2	RTLO-14918A-AS2	RTLO-16713A-T2	RTLO-16913L-DM3	RTLO-16918B	RTLO-18913A-T2
RTAO-10710C-AS	RTAO-16710C-AS	RTLO-14718B	RTLO-14918A-AS3	RTLO-16718B	RTLO-16913L-LHP	RTLO-16918B-AS	RTLO-18918A-AS2
RTAO-12710C-AC	RTLO-12713A	RTLO-14718B-T2	RTLO-14918B	RTLO-16718B-T2	RTLO-16913LHS-D	RTLO-18718B	RTLO-18918B

REAR SIDE ONLY | **RIGHT SIDE ONLY**

TRANSMISSION GEAR DATA:

REAR -Bolt Opening Gear NON-STANDARD of Centerline

52 Teeth - SPUR

PITCH LINE TO APERTURE FACE:

.0000" (.0000MM)

Caution: Application Approval Required for P.T.O. Output Shaft Speeds Above 2500 R.P.M.

REAR MOUNT & THRUSHAFT

REAR Side P.T.O. Model	Inter. Torq.	Dir. Rot.	Engine % Hi	Engine % Rev	Filler Block	Adapter Assy.	Stud Kit	RIGHT Side P.T.O. Model	Inter. Torq.	Dir. Rot.	Engine % Hi	Engine % Rev	Filler Block	Adapter Assy.	Stud Kit
541-LAT	400	Eng	76				Furnished								
541-LAU	400	Eng	76				Furnished								
541-MAT	350	Eng	98				Furnished								
541-MAU	350	Eng	98				Furnished								
541-NAT	300	Eng	112				Furnished								
541-NAU	300	Eng	112				Furnished								

CAUTION: Eaton Transmission Division has established a Maximum Torque Limit for the Transmission P.T.O. Driver Gear. For all RT/RTO/RTLO transmissions the torque limit is 350 Ft-lbs [475 N.m] unless the transmission has been upgraded to a roller type input shaft bearing, Eaton part number 4301417, then 500 Ft-lbs [678 N.m] torque becomes the Maximum limit. All torque limits on this application page reflect the 350 Ft-lbs [475 N.m] limit at the Transmission P.T.O. Drive Gear. Refer to the Chelsea P.T.O. Torque Limit Chart in the front section of this catalog for complete torque limit information.

CAUTION: Do not use geared adapters with 442 "A" and "C" ratios.

CAUTION: 660/680 Series: Applications above 1500 RPM output shaft speed, contact Chelsea Technical Service for approval.

NOTE: The 880 Series "T" ratio will interfere with the adjacent gear in the transmission on the bottom opening.

NOTE: The 442 and 489 Series ratios "U","W",&"X" will interfere with the adjaceant gear in the transmission on the bottom opening.

NOTE: The 442 Series ratios "S","U","W" and "X" will interfere with the adjacent gear in the transmission on the right opening.

NOTE: The AK & XK output flanges can not be used with the "A" & "C" ratios on the 489 Series P.T.O.s due to mounting stud interference. Use a RA or RB rotatable flange for the XK and the RA for the AK flange.

NOTE: If Ordering the 230/231 Series with the Shaft Brake Option, order the "BA" Output for Automatic Transmissions and the "BD" Output for Manual Transmissions.

NOTE: The 422XBAH Must Used One of the Geared Adapters Listed on the Application Page. Direction of Rotation Shown is the Final Output Shaft Rotation w/ Geared Adapter.

RTO-14915
RTO-16915
RTX-14715
RTX-15715

BOTTOM SIDE ONLY

TRANSMISSION GEAR DATA:
BOT 8-Bolt Opening Gear FORWARD of Centerline
47 Teeth - SPUR

PITCH LINE TO APERTURE FACE:
.8050" (20.5700MM)

RIGHT SIDE ONLY

TRANSMISSION GEAR DATA:
R.H. 6-Bolt Opening Gear FORWARD of Centerline
45 Teeth - SPUR

PITCH LINE TO APERTURE FACE:
1.0850" (27.5600MM)

Caution: Application Approval Required for P.T.O. Output Shaft Speeds Above 2500 R.P.M.

BOTTOM Side P.T.O. Model	Inter. Torq.	Dir. Rot.	Engine % Hi	Engine % Rev	Filler Block	Adapter Assy.	Stud Kit	RIGHT Side P.T.O. Model	Inter. Torq.	Dir. Rot.	Engine % Hi	Engine % Rev	Filler Block	Adapter Assy.	Stud Kit
ONE SPEED - SINGLE GEAR - MECHANICAL SHIFT															
100XRAHX-*3 (1)	125	Eng	174			328481X	Furnished	100XRAHX-*3 (1)	125	Eng	166				Furnished
812XKAHX-*3	268	Eng	116				Furnished								
ONE SPEED - TWO GEAR - MECHANICAL SHIFT															
221ZCAHX-*3	250	Opp	77		7-A-032(P)(2)	328564X	Furnished	221XCAHX-*3	250	Opp	74		7-A-032 (2)		Furnished
221ZEAHX-*3	250	Opp	89			328564X	Furnished	221XEAHX-*3	250	Opp	86				Furnished
221ZLAHX-*3	200	Opp	120			328564X	Furnished	221XLAHX-*3	200	Opp	115				Furnished
221ZPAHX-*3	200	Opp	145			328564X	Furnished	221XPAHX-*3	200	Opp	139				Furnished
442ZAAHX-*3 (4)	250	Opp	68			328564X	Furnished	442XAAHX-*3 (4)	250	Opp	65				Furnished
442ZCAHX-*3 (5)	250	Opp	87			328564X	Furnished	442XBAHX-*3 (3)	250	Eng	65			REQUIRED	Furnished
442ZFAHX-*3 (6)	250	Opp	108			328564X	Furnished	442XCAHX-*3 (5)	250	Opp	83				Furnished
442ZHAHX-*3 (7)	250	Opp	125			328564X	Furnished	442XFAHX-*3 (6)	250	Opp	103				Furnished
442ZLAHX-*3 (8)	222	Opp	139			328564X	Furnished	442XHAHX-*3 (7)	250	Opp	119				Furnished
442ZQAHX-*3 (8)	206	Opp	150			328564X	Furnished	442XLAHX-*3 (8)	233	Opp	134				Furnished
442ZRAHX-*3 (8)	178	Opp	174			328564X	Furnished	442XQAHX-*3 (8)	216	Opp	144				Furnished
442ZSAHX-*3 (8)	150	Opp	207			328564X	Furnished	442XRAHX-*3 (8)	187	Opp	166				Furnished
442ZUAHX-*3 (8)	126	Opp	247			328564X	Furnished	442XSAHX-*3 (8)	156	Opp	198				Furnished
442ZWAHX-*3 (8)	107	Opp	290			328564X	Furnished	442XUAHX-*3 (8)	132	Opp	236				Furnished
442ZXAHX-*3 (8)	91	Opp	343			328564X	Furnished	442XWAHX-*3 (8)	112	Opp	278				Furnished
489XAAHX-*3 (4)	250	Opp	68				Furnished	442XXAHX-*3 (8)	94	Opp	329				Furnished
489XCAHX-*3 (5)	250	Opp	87				Furnished	660XFAHX-*3 (9)	301	Opp	103				Furnished
489XFAHX-*3 (6)	250	Opp	108				Furnished	660XQAHX-*3 (10)	216	Opp	144				Furnished
489XHAHX-*3 (7)	250	Opp	125				Furnished	660XSAHX-*3 (11)	156	Opp	198				Furnished
489XLAHX-*3 (8)	222	Opp	139				Furnished								
489XQAHX-*3 (8)	206	Opp	150				Furnished								
489XRAHX-*3 (8)	178	Opp	174				Furnished								
489XSAHX-*3 (8)	150	Opp	207				Furnished								
489XUAHX-*3 (8)	126	Opp	247				Furnished								
489XWAHX-*3 (8)	107	Opp	290				Furnished								

Continued Next Page

CAUTION: Eaton Transmission Division has established a Maximum Torque Limit for the Transmission P.T.O. Driver Gear. For all RT/RTO/RTLO transmissions the torque limit is 350 Ft-lbs [475 N.m] unless the transmission has been upgraded to a roller type input shaft bearing, Eaton part number 4301417, then 500 Ft-lbs [678 N.m] torque becomes the Maximum limit. All torque limits on this application page reflect the 350 Ft-lbs [475 N.m] limit at the Transmission P.T.O. Drive Gear. Refer to the Chelsea P.T.O. Torque Limit Chart in the front section of this catalog for complete torque limit information.

CAUTION: 660/680 Series: Applications above 1500 RPM output shaft speed, contact Chelsea Technical Service for approval.

NOTE: The AK & XK output flanges can not be used with the "A" & "C" ratios on the 489 Series P.T.O.s due to mounting stud interference. Use a RA or RB rotatable flange for the XK and the RA for the AK flange.

NOTE: If Ordering the 230/231 Series with the Shaft Brake Option, order the "BA" Output for Automatic Transmissions and the "BD" Output for Manual Transmissions.

NOTE: The 422XBAH Must use one of the Geared Adapters Listed on the Application Page. Direction of Rotation Shown is the Final Output Shaft Rotation w/ Geared Adapter.

(1) Gear and Shaft Kit No. KXA-2-P-565
(2) Filler block furnished with P.T.O.
(3) Input Gear Part No. 5-P-1418
(4) Input Gear Part No. 5-P-1280
(5) Input Gear Part No. 5-P-1287
(6) Input Gear Part No. 5-P-1077
(7) Input Gear Part No. 5-P-1364
(8) Input Gear Part No. 5-P-1004
(9) Input Gear Part No. 5-P-1242
(10) Input Gear Part No. 5-P-1246
(11) Input Gear Part No. 5-P-1322

RTO-14915
RTO-16915
RTX-14715
RTX-15715

BOTTOM SIDE ONLY

TRANSMISSION GEAR DATA:
BOT 8-Bolt Opening Gear FORWARD of Centerline
47 Teeth - SPUR
PITCH LINE TO APERTURE FACE:
.8050" (20.5700MM)

RIGHT SIDE ONLY

TRANSMISSION GEAR DATA:
R.H. 6-Bolt Opening Gear FORWARD of Centerline
45 Teeth - SPUR
PITCH LINE TO APERTURE FACE:
1.0850" (27.5600MM)

Caution: Application Approval Required for P.T.O. Output Shaft Speeds Above 2500 R.P.M.

BOTTOM Side P.T.O. Model	Inter. Torq.	Dir. Rot.	Engine % Hi	Engine % Rev	Filler Block	Adapter Assy.	Stud Kit	RIGHT Side P.T.O. Model	Inter. Torq.	Dir. Rot.	Engine % Hi	Engine % Rev	Filler Block	Adapter Assy.	Stud Kit
ONE SPEED - TWO GEAR - MECHANICAL SHIFT															
489XXAHX-*3 (8)	91	Opp	343				Furnished								
680XFAHX-*3 (9)	288	Opp	108				Furnished								
680XQAHX-*3 (10)	206	Opp	150				Furnished								
680XSAHX-*3 (11)	150	Opp	207				Furnished								
823XBAHX-*3 (12)	423	Opp	73				Furnished								
823XJAHX-*3 (13)	279	Opp	111				Furnished								
823XMAHX-*3 (14)	238	Opp	130				Furnished								
823XRAHX-*3 (15)	172	Opp	180				Furnished								
823XTKTX-*3 (16)	142	Opp	218		8-A-165 (2)		Furnished								
880XBAHX-*3 (17)	423	Opp	73				Furnished								
880XDAHX-*3 (18)	357	Opp	87				Furnished								
880XGAHX-*3 (19)	329	Opp	94				Furnished								
880XJAHX-*3 (20)	279	Opp	111				Furnished								
880XMAHX-*3 (21)	238	Opp	130				Furnished								
880XQAHX-*3 (22)	203	Opp	153				Furnished								
880XRAHX-*3 (23)	172	Opp	180				Furnished								
880XTAHX-*3 (24)	134	Opp	232				Furnished								
ONE SPEED - TWO GEAR - POWERSHIFT (AIR)															
230XAAJX-*3	250	Opp	57			328481X	Furnished	230XAAJX-*3	250	Opp	54				Furnished
230XBAJX-*3	250	Opp	74			328481X	Furnished	230XBAJX-*3	250	Opp	71				Furnished
230XDAJX-*3	250	Opp	85			328481X	Furnished	230XDAJX-*3	250	Opp	82				Furnished
230XKAJX-*3	250	Opp	115			328481X	Furnished	230XKAJX-*3	250	Opp	110				Furnished
230XQAJX-*3	203	Opp	153			328481X	Furnished	230XQAJX-*3	212	Opp	147				Furnished
230XUAJX-*3	126	Opp	246			328481X	Furnished	230XUAJX-*3	132	Opp	235				Furnished
236ZDAHX-*3 (8)	250	Opp	113			328564X	Furnished	236XDAHX-*3 (8)	250	Opp	109				Furnished
236ZKAHX-*3 (8)	215	Opp	145			328564X	Furnished	236XKAHX-*3 (8)	224	Opp	138				Furnished
236ZQAHX-*3 (8)	160	Opp	195			328564X	Furnished	236XQAHX-*3 (8)	166	Opp	187				Furnished
236ZUAHX-*3 (8)	139	Opp	223			328564X	Furnished	236XUAHX-*3 (8)	145	Opp	214				Furnished

Continued Next Page

CAUTION: Eaton Transmission Division has established a Maximum Torque Limit for the Transmission P.T.O. Driver Gear. For all RT/RTO/RTLO transmissions the torque limit is 350 Ft-lbs [475 N.m] unless the transmission has been upgraded to a roller type input shaft bearing, Eaton part number 4301417, then 500 Ft-lbs [678 N.m] torque becomes the Maximum limit. All torque limits on this application page reflect the 350 Ft-lbs [475 N.m] limit at the Transmission P.T.O. Drive Gear. Refer to the Chelsea P.T.O. Torque Limit Chart in the front section of this catalog for complete torque limit information.

CAUTION: 660/680 Series: Applications above 1500 RPM output shaft speed, contact Chelsea Technical Service for approval.

NOTE: The AK & XK output flanges can not be used with the "A" & "C" ratios on the 489 Series P.T.O.s due to mounting stud interference. Use a RA or RB rotatable flange for the XK and the RA for the AK flange.

NOTE: If Ordering the 230/231 Series with the Shaft Brake Option, order the "BA" Output for Automatic Transmissions and the "BD" Output for Manual Transmissions.

NOTE: The 422XBAH Must use one of the Geared Adapters Listed on the Application Page. Direction of Rotation Shown is the Final Output Shaft Rotation w/ Geared Adapter.

(2) Filler block furnished with P.T.O.
(8) Input Gear Part No. 5-P-1004
(9) Input Gear Part No. 5-P-1242
(10) Input Gear Part No. 5-P-1246
(11) Input Gear Part No. 5-P-1322
(12) Input Gear Part No. 5-P-285
(13) Input Gear Part No. 5-P-325
(14) Input Gear Part No. 5-P-283
(15) Input Gear Part No. 5-P-721
(16) Input Gear Part No. 5-P-1395
(17) Input Gear Part No. 5-P-1100
(18) Input Gear Part No. 5-P-1101
(19) Input Gear Part No. 5-P-1135
(20) Input Gear Part No. 5-P-1102
(21) Input Gear Part No. 5-P-1103
(22) Input Gear Part No. 5-P-1385
(23) Input Gear Part No. 5-P-1104
(24) Input Gear Part No. 5-P-1105

RTO-14915
RTO-16915
RTX-14715
RTX-15715

BOTTOM SIDE ONLY

TRANSMISSION GEAR DATA:
BOT 8-Bolt Opening Gear FORWARD of Centerline
47 Teeth - SPUR

PITCH LINE TO APERTURE FACE:
.8050" (20.5700MM)

RIGHT SIDE ONLY

TRANSMISSION GEAR DATA:
R.H. 6-Bolt Opening Gear FORWARD of Centerline
45 Teeth - SPUR

PITCH LINE TO APERTURE FACE:
1.0850" (27.5600MM)

Caution: Application Approval Required for P.T.O. Output Shaft Speeds Above 2500 R.P.M.

BOTTOM Side P.T.O. Model	Inter. Torq.	Dir. Rot.	Engine % Hi	Engine % Rev	Filler Block	Adapter Assy.	Stud Kit	RIGHT Side P.T.O. Model	Inter. Torq.	Dir. Rot.	Engine % Hi	Engine % Rev	Filler Block	Adapter Assy.	Stud Kit
ONE SPEED - TWO GEAR - POWERSHIFT (AIR)															
885XBAHX-*3 (17)	423	Opp	73				Furnished								
885XGAHX-*3 (19)	329	Opp	94				Furnished								
885XJAHX-*3 (20)	279	Opp	111				Furnished								
885XMAHX-*3 (21)	238	Opp	130				Furnished								
ONE SPEED - FORWARD & REVERSE															
340SFAHX-*5 (25)	200	Opp	94	99	7-A-032(P) 7-A-140 (26)	310778X	Furnished	340XFAHX-*5 (25)	200	Opp	90	95	7-A-140 (2)		Furnished
352ZSAHX-*3 (8)	140	Opp	210	271		328564X	Furnished	352XSAHX-*3 (8)	140	Opp	201	260			Furnished
863XBAHX-*5	423	Opp	73	91			Furnished								
ONE SPEED - DUAL SHAFT															
452ZSAHX-*3 (8)	140	Opp	210			328564X	Furnished								
GEARED ADAPTERS															
628XAHX-3AH					8-A-032		Furnished	626XAHX-3AH							Furnished
								630XAHX-3AH							Furnished
								645XAHX-3AH							Furnished

Continued Next Page

CAUTION: Eaton Transmission Division has established a Maximum Torque Limit for the Transmission P.T.O. Driver Gear. For all RT/RTO/RTLO transmissions the torque limit is 350 Ft-lbs [475 N.m] unless the transmission has been upgraded to a roller type input shaft bearing, Eaton part number 4301417, then 500 Ft-lbs [678 N.m] torque becomes the Maximum limit. All torque limits on this application page reflect the 350 Ft-lbs [475 N.m] limit at the Transmission P.T.O. Drive Gear. Refer to the Chelsea P.T.O. Torque Limit Chart in the front section of this catalog for complete torque limit information.

CAUTION: 660/680 Series: Applications above 1500 RPM output shaft speed, contact Chelsea Technical Service for approval.

NOTE: The AK & XK output flanges can not be used with the "A" & "C" ratios on the 489 Series P.T.O.s due to mounting stud interference. Use a RA or RB rotatable flange for the XK and the RA for the AK flange.

NOTE: If Ordering the 230/231 Series with the Shaft Brake Option, order the "BA" Output for Automatic Transmissions and the "BD" Output for Manual Transmissions.

NOTE: The 422XBAH Must use one of the Geared Adapters Listed on the Application Page. Direction of Rotation Shown is the Final Output Shaft Rotation w/ Geared Adapter.

(2) Filler block furnished with P.T.O.
(8) Input Gear Part No. 5-P-1004
(17) Input Gear Part No. 5-P-1100
(19) Input Gear Part No. 5-P-1135
(20) Input Gear Part No. 5-P-1102
(21) Input Gear Part No. 5-P-1103
(25) Input Gear Part No. 5-P-581
(26) Filler block furnished with P.T.O. but not required

RTO-14915
RTO-16915
RTX-14715
RTX-15715

REAR SIDE ONLY | **RIGHT SIDE ONLY**

TRANSMISSION GEAR DATA:
REAR -Bolt Opening Gear NON-STANDARD of Centerline
54 Teeth - SPUR

PITCH LINE TO APERTURE FACE:
.0000" (.0000MM)

Caution: Application Approval Required for P.T.O. Output Shaft Speeds Above 2500 R.P.M.

REAR MOUNT & THRUSHAFT

REAR Side P.T.O. Model	Inter. Torq.	Dir. Rot.	Engine % Hi	Engine % Rev	Filler Block	Adapter Assy.	Stud Kit	RIGHT Side P.T.O. Model	Inter. Torq.	Dir. Rot.	Engine % Hi	Engine % Rev	Filler Block	Adapter Assy.	Stud Kit
541-LBD	400	Eng	86				Furnished								
541-MBD	350	Eng	111				Furnished								
541-NBD	300	Eng	126				Furnished								

CAUTION: Eaton Transmission Division has established a Maximum Torque Limit for the Transmission P.T.O. Driver Gear. For all RT/RTO/RTLO transmissions the torque limit is 350 Ft-lbs [475 N.m] unless the transmission has been upgraded to a roller type input shaft bearing, Eaton part number 4301417, then 500 Ft-lbs [678 N.m] torque becomes the Maximum limit. All torque limits on this application page reflect the 350 Ft-lbs [475 N.m] limit at the Transmission P.T.O. Drive Gear. Refer to the Chelsea P.T.O. Torque Limit Chart in the front section of this catalog for complete torque limit information.

CAUTION: 660/680 Series: Applications above 1500 RPM output shaft speed, contact Chelsea Technical Service for approval.

NOTE: The AK & XK output flanges can not be used with the "A" & "C" ratios on the 489 Series P.T.O.s due to mounting stud interference. Use a RA or RB rotatable flange for the XK and the RA for the AK flange.

NOTE: If Ordering the 230/231 Series with the Shaft Brake Option, order the "BA" Output for Automatic Transmissions and the "BD" Output for Manual Transmissions.

NOTE: The 422XBAH Must use one of the Geared Adapters Listed on the Application Page. Direction of Rotation Shown is the Final Output Shaft Rotation w/ Geared Adapter.

Parker Hannifin Corporation
Chelsea Products Division
Olive Branch, MS 38654 USA

AT-1202

BOTTOM SIDE ONLY

TRANSMISSION GEAR DATA:
BOT 6-Bolt Opening Gear FORWARD of Centerline
30 Teeth - SPUR

PITCH LINE TO APERTURE FACE:
1.0500" (26.6700MM)

TOP SIDE ONLY

TRANSMISSION GEAR DATA:
TOP 8-Bolt Opening Gear FORWARD of Centerline
30 Teeth - SPUR

PITCH LINE TO APERTURE FACE:
.7750" (19.6900MM)

Caution: Application Approval Required for P.T.O. Output Shaft Speeds Above 2500 R.P.M.

BOTTOM Side P.T.O. Model	Inter. Torq.	Dir. Rot.	Engine % Hi	Engine % Rev	Filler Block	Adapter Assy.	Stud Kit	TOP Side P.T.O. Model	Inter. Torq.	Dir. Rot.	Engine % Hi	Engine % Rev	Filler Block	Adapter Assy.	Stud Kit
ONE SPEED - SINGLE GEAR - MECHANICAL SHIFT															
100XRABX-*3 (1)	125	Eng	140		7-A-032		Furnished	100XRABX-*3 (1)	125	Eng	140		7-A-032(P)	328481X	Furnished
ONE SPEED - TWO GEAR - MECHANICAL SHIFT															
221XCABX-*3	250	Opp	64		7-A-032		Furnished	221ZCABX-*5	250	Opp	64		7-A-032(P)	328564X	Furnished
221XEABX-*3	250	Opp	71		7-A-032		Furnished	221ZEABX-*5	250	Opp	71		7-A-032(P)	328564X	Furnished
221XLABX-*3	200	Opp	96		7-A-032		Furnished	221ZLABX-*5	200	Opp	96		7-A-032(P)	328564X	Furnished
221XPABX-*3	200	Opp	116		7-A-032		Furnished	221ZPABX-*5	200	Opp	116		7-A-032(P)	328564X	Furnished
442XAABX-*3 (2)	250	Opp	53		7-A-032		Furnished	442ZAABX-*5 (2)	250	Opp	53		7-A-032(P)	328564X	Furnished
442XCABX-*3 (3)	250	Opp	68		7-A-032		Furnished	442ZCABX-*5 (3)	250	Opp	68		7-A-032(P)	328564X	Furnished
442XFABX-*3 (4)	250	Opp	84		7-A-032		Furnished	442ZFABX-*5 (4)	250	Opp	84		7-A-032(P)	328564X	Furnished
442XLABX-*3 (5)	250	Opp	108		7-A-032		Furnished	442ZLABX-*5 (5)	250	Opp	108		7-A-032(P)	328564X	Furnished
442XQABX-*3 (5)	225	Opp	117		7-A-032		Furnished	442ZQABX-*5 (5)	225	Opp	117		7-A-032(P)	328564X	Furnished
442XRABX-*3 (5)	225	Opp	135		7-A-032		Furnished	442ZRABX-*5 (5)	225	Opp	135		7-A-032(P)	328564X	Furnished
442XSABX-*3 (5)	200	Opp	161		7-A-032		Furnished	442ZSABX-*5 (5)	200	Opp	161		7-A-032(P)	328564X	Furnished
442XUABX-*3 (5)	195	Opp	192		7-A-032		Furnished	442ZUABX-*5 (5)	195	Opp	192		7-A-032(P)	328564X	Furnished
442XWABX-*3 (5)	175	Opp	225		7-A-032		Furnished	442ZWABX-*5 (5)	175	Opp	225		7-A-032(P)	328564X	Furnished
442XXABX-*3 (5)	140	Opp	267		7-A-032		Furnished	442ZXABX-*5 (5)	140	Opp	267		7-A-032(P)	328564X	Furnished
								489XAABX-*5 (2)	250	Opp	53				Furnished
								489XCABX-*5 (3)	250	Opp	68				Furnished
								489XFABX-*5 (4)	250	Opp	84				Furnished
								489XLABX-*5 (5)	250	Opp	108				Furnished
								489XQABX-*5 (5)	225	Opp	117				Furnished
								489XRABX-*5 (5)	225	Opp	135				Furnished
								489XSABX-*5 (5)	200	Opp	161				Furnished
								489XUABX-*5 (5)	195	Opp	192				Furnished
								489XWABX-*5 (5)	175	Opp	225				Furnished
								489XXABX-*5 (5)	140	Opp	267				Furnished
								880XBABX-*5 (6)	500	Opp	58				Furnished

Continued Next Page

NOTE: The AK & XK output flanges can not be used with the "A" & "C" ratios on the 489 Series P.T.O. due to mounting stud interference. Use a RA or RB rotatable flange for the XK and the RA for the AK flange.

(1) Gear and Shaft Kit No. KXA-2-P-563
(2) Input Gear Part No. 5-P-1279
(3) Input Gear Part No. 5-P-1286
(4) Input Gear Part No. 5-P-1076
(5) Input Gear Part No. 5-P-1001
(6) Input Gear Part No. 5-P-1099

AT-1202

BOTTOM SIDE ONLY	TOP SIDE ONLY
TRANSMISSION GEAR DATA: BOT 6-Bolt Opening Gear FORWARD of Centerline 30 Teeth - SPUR **PITCH LINE TO APERTURE FACE:** 1.0500" (26.6700MM)	**TRANSMISSION GEAR DATA:** TOP 8-Bolt Opening Gear FORWARD of Centerline 30 Teeth - SPUR **PITCH LINE TO APERTURE FACE:** .7750" (19.6900MM)

Caution: Application Approval Required for P.T.O. Output Shaft Speeds Above 2500 R.P.M.

BOTTOM Side P.T.O. Model	Inter. Torq.	Dir. Rot.	Engine % Hi	Engine % Rev	Filler Block	Adapter Assy.	Stud Kit	TOP Side P.T.O. Model	Inter. Torq.	Dir. Rot.	Engine % Hi	Engine % Rev	Filler Block	Adapter Assy.	Stud Kit
ONE SPEED - TWO GEAR - POWERSHIFT (AIR)															
236XDABX-*3 (5)	250	Opp	88		7-A-032		Furnished	236ZDABX-*5 (5)	250	Opp	88		7-A-032(P)	328564X	Furnished
236XKABX-*3 (5)	250	Opp	112		7-A-032		Furnished	236ZKABX-*5 (5)	250	Opp	112		7-A-032(P)	328564X	Furnished
236XQABX-*3 (5)	250	Opp	151		7-A-032		Furnished	236ZQABX-*5 (5)	250	Opp	151		7-A-032(P)	328564X	Furnished
236XUABX-*3 (5)	225	Opp	174		7-A-032		Furnished	236ZUABX-*5 (5)	225	Opp	174		7-A-032(P)	328564X	Furnished
ONE SPEED - FORWARD & REVERSE															
340XFABX-*5 (7)	200	Opp	76	80	7-A-140 (8)		Furnished	340SFABX-*5 (7)	200	Opp	76	80	7-A-032(P)	310778X	Furnished
352XSABX-*3 (5)	140	Opp	163	211	7-A-032		Furnished	352ZSABX-*5 (5)	140	Opp	163	211	7-A-032(P)	328564X	Furnished
								863XBABX-*5	500	Opp	58	72			Furnished
ONE SPEED - DUAL SHAFT															
452XSABX-*3 (5)	140	Opp	163		7-A-032		Furnished	452ZSABX-*3 (5)	140	Opp	163		7-A-032(P)	328564X	Furnished
GEARED ADAPTERS															
626XABX-3AB					7-A-032		Furnished	628XABX-3AB							Furnished
630XABX-3AB					7-A-032		Furnished								
645XABX-3AB					7-A-032		Furnished								

NOTE: The AK & XK output flanges can not be used with the "A" & "C" ratios on the 489 Series P.T.O. due to mounting stud interference. Use a RA or RB rotatable flange for the XK and the RA for the AK flange.

(5) Input Gear Part No. 5-P-1001
(7) Input Gear Part No. 5-P-579
(8) Filler block furnished with P.T.O.

RT-8608L

BOTTOM SIDE ONLY

TRANSMISSION GEAR DATA:
BOT 8-Bolt Opening Gear FORWARD of Centerline
47 Teeth - SPUR

PITCH LINE TO APERTURE FACE:
.8050" (20.4500MM)

RIGHT SIDE ONLY

TRANSMISSION GEAR DATA:
R.H. 6-Bolt Opening Gear FORWARD of Centerline
45 Teeth - SPUR

PITCH LINE TO APERTURE FACE:
1.0850" (27.5600MM)

Caution: Application Approval Required for P.T.O. Output Shaft Speeds Above 2500 R.P.M.

BOTTOM Side P.T.O. Model	Inter. Torq.	Dir. Rot.	Engine % Hi	Engine % Rev	Filler Block	Adapter Assy.	Stud Kit	RIGHT Side P.T.O. Model	Inter. Torq.	Dir. Rot.	Engine % Hi	Engine % Rev	Filler Block	Adapter Assy.	Stud Kit
ONE SPEED - SINGLE GEAR - MECHANICAL SHIFT															
100XRAHX-*3 (1)	125	Eng	113			328481X	Furnished	100XRAHX-*3 (1)	125	Opp	108			329138X	Furnished
812XKAHX-*3	268	Eng	75				Furnished								
ONE SPEED - TWO GEAR - MECHANICAL SHIFT															
221ZCAHX-*3	250	Opp	50		7-A-032(P)(2)	328564X	Furnished	221XCAHX-*3	250	Opp	48		7-A-032 (2)		Furnished
221ZEAHX-*3	250	Opp	58			328564X	Furnished	221XEAHX-*3	250	Opp	56				Furnished
221ZLAHX-*3	200	Opp	78			328564X	Furnished	221XLAHX-*3	200	Opp	75				Furnished
221ZPAHX-*3	200	Opp	94			328564X	Furnished	221XPAHX-*3	200	Opp	90				Furnished
442ZAAHX-*3 (4)	250	Opp	44			328564X	Furnished	442XAAHX-*3 (4)	250	Opp	42				Furnished
442ZCAHX-*3 (5)	250	Opp	57			328564X	Furnished	442XBAHX-*3 (3)	250	Eng	42			REQUIRED	Furnished
442ZFAHX-*3 (6)	250	Opp	70			328564X	Furnished	442XCAHX-*3 (5)	250	Opp	54				Furnished
442ZHAHX-*3 (7)	250	Opp	81			328564X	Furnished	442XFAHX-*3 (6)	250	Opp	67				Furnished
442ZLAHX-*3 (8)	222	Opp	91			328564X	Furnished	442XHAHX-*3 (7)	250	Opp	78				Furnished
442ZQAHX-*3 (8)	206	Opp	98			328564X	Furnished	442XLAHX-*3 (8)	233	Opp	87				Furnished
442ZRAHX-*3 (8)	178	Opp	113			328564X	Furnished	442XQAHX-*3 (8)	216	Opp	94				Furnished
442ZSAHX-*3 (8)	150	Opp	135			328564X	Furnished	442XRAHX-*3 (8)	187	Opp	108				Furnished
442ZUAHX-*3 (8)	126	Opp	161			328564X	Furnished	442XSAHX-*3 (8)	156	Opp	129				Furnished
442ZWAHX-*3 (8)	107	Opp	189			328564X	Furnished	442XUAHX-*3 (8)	132	Opp	154				Furnished
442ZXAHX-*3 (8)	91	Opp	223			328564X	Furnished	442XWAHX-*3 (8)	112	Opp	181				Furnished
489XAAHX-*3 (4)	250	Opp	44				Furnished	442XXAHX-*3 (8)	94	Opp	214				Furnished
489XCAHX-*3 (5)	250	Opp	57				Furnished	660XFAHX-*3 (9)	301	Opp	67				Furnished
489XFAHX-*3 (6)	250	Opp	70				Furnished	660XQAHX-*3 (10)	216	Opp	94				Furnished
489XHAHX-*3 (7)	250	Opp	81				Furnished	660XSAHX-*3 (11)	156	Opp	129				Furnished
489XLAHX-*3 (8)	222	Opp	91				Furnished								
489XQAHX-*3 (8)	206	Opp	98				Furnished								
489XRAHX-*3 (8)	178	Opp	113				Furnished								
489XSAHX-*3 (8)	150	Opp	135				Furnished								
489XUAHX-*3 (8)	126	Opp	161				Furnished								
489XWAHX-*3 (8)	107	Opp	189				Furnished								

Continued Next Page

CAUTION: Eaton Transmission Division has established a Maximum Torque Limit for the Transmission P.T.O. Driver Gear. For all RT/RTO/RTLO transmissions the torque limit is 350 Ft-lbs [475 N.m] unless the transmission has been upgraded to a roller type input shaft bearing, Eaton part number 4301417, then 500 Ft-lbs [678 N.m] torque becomes the Maximum limit. All torque limits on this application page reflect the 350 Ft-lbs [475 N.m] limit at the Transmission P.T.O. Drive Gear. Refer to the Chelsea P.T.O. Torque Limit Chart in the front section of this catalog for complete torque limit information.

CAUTION: Do not use geared adapters with 442 "A" and "C" ratios.

CAUTION: 660/680 Series: Applications above 1500 RPM output shaft speed, contact Chelsea Technical Service for approval.

NOTE: The 100 series will not mount on the right side without an adapter gear due to output shaft interference with transmission housing.

NOTE: The AK & XK output flanges can not be used with the "A" & "C" ratios on the 489 Series P.T.O.s due to mounting stud interference. Use a RA or RB rotatable flange for the XK and the RA for the AK flange.

NOTE: If Ordering the 230/231 Series with the Shaft Brake Option, order the "BA" Output for Automatic Transmissions and the "BD" Output for Manual Transmissions.

NOTE: The 422XBAH Must use one of the Geared Adapters Listed on the Application Page. Direction of Rotation Shown is the Final Output Shaft Rotation w/ Geared Adapter.

(1) Gear and Shaft Kit No. KXA-2-P-565
(2) Filler block furnished with P.T.O.
(3) Input Gear Part No. 5-P-1418
(4) Input Gear Part No. 5-P-1280
(5) Input Gear Part No. 5-P-1287
(6) Input Gear Part No. 5-P-1077
(7) Input Gear Part No. 5-P-1364
(8) Input Gear Part No. 5-P-1004
(9) Input Gear Part No. 5-P-1242
(10) Input Gear Part No. 5-P-1246
(11) Input Gear Part No. 5-P-1322

January 2008

Parker Hannifin Corporation
Chelsea Products Division
Olive Branch, MS 38654 USA

RT-8608L

BOTTOM SIDE ONLY	RIGHT SIDE ONLY
TRANSMISSION GEAR DATA: BOT 8-Bolt Opening Gear FORWARD of Centerline 47 Teeth - SPUR **PITCH LINE TO APERTURE FACE:** .8050" (20.4500MM)	**TRANSMISSION GEAR DATA:** R.H. 6-Bolt Opening Gear FORWARD of Centerline 45 Teeth - SPUR **PITCH LINE TO APERTURE FACE:** 1.0850" (27.5600MM)

Caution: Application Approval Required for P.T.O. Output Shaft Speeds Above 2500 R.P.M.

BOTTOM Side P.T.O. Model	Inter. Torq.	Dir. Rot.	Engine % Hi	Engine % Rev	Filler Block	Adapter Assy.	Stud Kit	RIGHT Side P.T.O. Model	Inter. Torq.	Dir. Rot.	Engine % Hi	Engine % Rev	Filler Block	Adapter Assy.	Stud Kit
ONE SPEED - TWO GEAR - MECHANICAL SHIFT															
489XXAHX-*3 (8)	91	Opp	223				Furnished								
680XFAHX-*3 (9)	288	Opp	70				Furnished								
680XQAHX-*3 (10)	206	Opp	98				Furnished								
680XSAHX-*3 (11)	150	Opp	135				Furnished								
823XBAHX-*3 (12)	423	Opp	48				Furnished								
823XJAHX-*3 (13)	279	Opp	72				Furnished								
823XMAHX-*3 (14)	238	Opp	85				Furnished								
823XRAHX-*3 (15)	172	Opp	117				Furnished								
823XTKTX-*3 (16)	142	Opp	142		8-A-165 (2)		Furnished								
880XBAHX-*3 (17)	423	Opp	48				Furnished								
880XDAHX-*3 (18)	357	Opp	57				Furnished								
880XGAHX-*3 (19)	329	Opp	61				Furnished								
880XJAHX-*3 (20)	279	Opp	72				Furnished								
880XMAHX-*3 (21)	238	Opp	85				Furnished								
880XQAHX-*3 (22)	203	Opp	99				Furnished								
880XRAHX-*3 (23)	172	Opp	117				Furnished								
880XTAHX-*3 (24)	134	Opp	151				Furnished								
ONE SPEED - TWO GEAR - POWERSHIFT (AIR)															
230XAAJX-*3	250	Opp	37		328481X		Furnished	230XAAJX-*3	250	Opp	35				Furnished
230XBAJX-*3	250	Opp	48		328481X		Furnished	230XBAJX-*3	250	Opp	46				Furnished
230XDAJX-*3	250	Opp	55		328481X		Furnished	230XDAJX-*3	250	Opp	53				Furnished
230XKAJX-*3	250	Opp	75		328481X		Furnished	230XKAJX-*3	250	Opp	72				Furnished
230XQAJX-*3	203	Opp	100		328481X		Furnished	230XQAJX-*3	212	Opp	96				Furnished
230XUAJX-*3	126	Opp	160		328481X		Furnished	230XUAJX-*3	132	Opp	153				Furnished
236ZDAHX-*3 (8)	250	Opp	74		328564X		Furnished	236XDAHX-*3 (8)	250	Opp	70				Furnished
236ZKAHX-*3 (8)	215	Opp	94		328564X		Furnished	236XKAHX-*3 (8)	224	Opp	90				Furnished
236ZQAHX-*3 (8)	160	Opp	127		328564X		Furnished	236XQAHX-*3 (8)	166	Opp	122				Furnished
236ZUAHX-*3 (8)	139	Opp	145		328564X		Furnished	236XUAHX-*3 (8)	145	Opp	139				Furnished

Continued Next Page

CAUTION: Eaton Transmission Division has established a Maximum Torque Limit for the Transmission P.T.O. Driver Gear. For all RT/RTO/RTLO transmissions the torque limit is 350 Ft-lbs [475 N.m] unless the transmission has been upgraded to a roller type input shaft bearing, Eaton part number 4301417, then 500 Ft-lbs [678 N.m] torque becomes the Maximum limit. All torque limits on this application page reflect the 350 Ft-lbs [475 N.m] limit at the Transmission P.T.O. Drive Gear. Refer to the Chelsea P.T.O. Torque Limit Chart in the front section of this catalog for complete torque limit information.

CAUTION: Do not use geared adapters with 442 "A" and "C" ratios.

CAUTION: 660/680 Series: Applications above 1500 RPM output shaft speed, contact Chelsea Technical Service for approval.

NOTE: The 100 series will not mount on the right side without an adapter gear due to output shaft interference with transmission housing.

NOTE: The AK & XK output flanges can not be used with the "A" & "C" ratios on the 489 Series P.T.O.s due to mounting stud interference. Use a RA or RB rotatable flange for the XK and the RA for the AK flange.

NOTE: If Ordering the 230/231 Series with the Shaft Brake Option, order the "BA" Output for Automatic Transmissions and the "BD" Output for Manual Transmissions.

NOTE: The 422XBAH Must use one of the Geared Adapters Listed on the Application Page. Direction of Rotation Shown is the Final Output Shaft Rotation w/ Geared Adapter.

(2) Filler block furnished with P.T.O.
(8) Input Gear Part No. 5-P-1004
(9) Input Gear Part No. 5-P-1242
(10) Input Gear Part No. 5-P-1246
(11) Input Gear Part No. 5-P-1322
(12) Input Gear Part No. 5-P-285
(13) Input Gear Part No. 5-P-325
(14) Input Gear Part No. 5-P-283
(15) Input Gear Part No. 5-P-721
(16) Input Gear Part No. 5-P-1395
(17) Input Gear Part No. 5-P-1100
(18) Input Gear Part No. 5-P-1101
(19) Input Gear Part No. 5-P-1135
(20) Input Gear Part No. 5-P-1102
(21) Input Gear Part No. 5-P-1103
(22) Input Gear Part No. 5-P-1385
(23) Input Gear Part No. 5-P-1104
(24) Input Gear Part No. 5-P-1105

Parker Hannifin Corporation
Chelsea Products Division
Olive Branch, MS 38654 USA

RT-8608L

BOTTOM SIDE ONLY

TRANSMISSION GEAR DATA:
BOT 8-Bolt Opening Gear FORWARD of Centerline
47 Teeth - SPUR

PITCH LINE TO APERTURE FACE:
.8050" (20.4500MM)

RIGHT SIDE ONLY

TRANSMISSION GEAR DATA:
R.H. 6-Bolt Opening Gear FORWARD of Centerline
45 Teeth - SPUR

PITCH LINE TO APERTURE FACE:
1.0850" (27.5600MM)

Caution: Application Approval Required for P.T.O. Output Shaft Speeds Above 2500 R.P.M.

BOTTOM Side P.T.O. Model	Inter. Torq.	Dir. Rot.	Engine % Hi	Engine % Rev	Filler Block	Adapter Assy.	Stud Kit	RIGHT Side P.T.O. Model	Inter. Torq.	Dir. Rot.	Engine % Hi	Engine % Rev	Filler Block	Adapter Assy.	Stud Kit
ONE SPEED - TWO GEAR - POWERSHIFT (AIR)															
885XBAHX-*3 (17)	423	Opp	48				Furnished								
885XGAHX-*3 (19)	329	Opp	61				Furnished								
885XJAHX-*3 (20)	279	Opp	72				Furnished								
885XMAHX-*3 (21)	238	Opp	85				Furnished								
ONE SPEED - FORWARD & REVERSE															
340SFAHX-*5 (25)	200	Opp	61	64	7-A-032(P) 7-A-140 (26)	310778X	Furnished	340XFAHX-*5 (25)	200	Opp	59	62	7-A-140 (2)		Furnished
352ZSAHX-*3 (8)	140	Opp	136	177		328564X	Furnished	352XSAHX-*3 (8)	140	Opp	131	169			Furnished
863XBAHX-*5	423	Opp	48	59			Furnished								
ONE SPEED - DUAL SHAFT															
452ZSAHX-*3 (8)	140	Opp	136			328564X	Furnished	452XSAHX-*3 (8)	140	Opp	131				Furnished
GEARED ADAPTERS															
628XAHX-3AH					8-A-032		Furnished	626XAHX-3AH							Furnished
								630XAHX-3AH							Furnished
								645XAHX-3AH							Furnished

CAUTION: Eaton Transmission Division has established a Maximum Torque Limit for the Transmission P.T.O. Driver Gear. For all RT/RTO/RTLO transmissions the torque limit is 350 Ft-lbs [475 N.m] unless the transmission has been upgraded to a roller type input shaft bearing, Eaton part number 4301417, then 500 Ft-lbs [678 N.m] torque becomes the Maximum limit. All torque limits on this application page reflect the 350 Ft-lbs [475 N.m] limit at the Transmission P.T.O. Drive Gear. Refer to the Chelsea P.T.O. Torque Limit Chart in the front section of this catalog for complete torque limit information.

CAUTION: Do not use geared adapters with 442 "A" and "C" ratios.

CAUTION: 660/680 Series: Applications above 1500 RPM output shaft speed, contact Chelsea Technical Service for approval.

NOTE: The 100 series will not mount on the right side without an adapter gear due to output shaft interference with transmission housing.

NOTE: The AK & XK output flanges can not be used with the "A" & "C" ratios on the 489 Series P.T.O.s due to mounting stud interference. Use a RA or RB rotatable flange for the XK and the RA for the AK flange.

NOTE: If Ordering the 230/231 Series with the Shaft Brake Option, order the "BA" Output for Automatic Transmissions and the "BD" Output for Manual Transmissions.

NOTE: The 422XBAH Must use one of the Geared Adapters Listed on the Application Page. Direction of Rotation Shown is the Final Output Shaft Rotation w/ Geared Adapter.

(2) Filler block furnished with P.T.O.
(8) Input Gear Part No. 5-P-1004
(17) Input Gear Part No. 5-P-1100
(19) Input Gear Part No. 5-P-1135
(20) Input Gear Part No. 5-P-1102
(21) Input Gear Part No. 5-P-1103
(25) Input Gear Part No. 5-P-581
(26) Filler block furnished with P.T.O. but not required

January 2008

Parker Hannifin Corporation
Chelsea Products Division
Olive Branch, MS 38654 USA

RT-6609A
RT-7608LL
RT-8609

BOTTOM SIDE ONLY

TRANSMISSION GEAR DATA:
BOT 8-Bolt Opening Gear FORWARD of Centerline
33 Teeth - SPUR

PITCH LINE TO APERTURE FACE:
.8100" (20.5700MM)

RIGHT SIDE ONLY

TRANSMISSION GEAR DATA:
R.H. 6-Bolt Opening Gear FORWARD of Centerline
33 Teeth - SPUR

PITCH LINE TO APERTURE FACE:
1.0900" (27.6900MM)

Caution: Application Approval Required for P.T.O. Output Shaft Speeds Above 2500 R.P.M.

BOTTOM Side P.T.O. Model	Inter. Torq.	Dir. Rot.	Engine % Hi	Engine % Rev	Filler Block	Adapter Assy.	Stud Kit	RIGHT Side P.T.O. Model	Inter. Torq.	Dir. Rot.	Engine % Hi	Engine % Rev	Filler Block	Adapter Assy.	Stud Kit
ONE SPEED - SINGLE GEAR - MECHANICAL SHIFT															
100XRAHX-*3 (1)	125	Eng	99			328481X	Furnished	100XRAHX-*3 (1)	125	Eng	99				Furnished
812XKAHX-*3	400	Eng	66				Furnished								
ONE SPEED - TWO GEAR - MECHANICAL SHIFT															
221XCAHX-*3	250	Opp	44		7-A-032(P)(2)	328481X	Furnished	221XCAHX-*3	250	Opp	44		7-A-032 (2)		Furnished
221XEAHX-*3	250	Opp	51		7-A-032(P)	328481X	Furnished	221XEAHX-*3	250	Opp	51				Furnished
221XLAHX-*3	200	Opp	68		7-A-032(P)	328481X	Furnished	221XLAHX-*3	200	Opp	68				Furnished
221XPAHX-*3	200	Opp	83		7-A-032(P)	328481X	Furnished	221XPAHX-*3	200	Opp	83				Furnished
442ZAAHX-*3 (5)	250	Opp	39			328564X	Furnished	442XAAHX-*3 (5)	250	Opp	39				Furnished
442ZCAHX-*3 (6)	250	Opp	50			328564X	Furnished	442XBAHX-*3 (3)	250	Eng	39			REQUIRED	Furnished
442ZFAHX-*3 (7)	250	Opp	61			328564X	Furnished	442XCAHX-*3 (6)	250	Opp	50				Furnished
442ZHAHX-*3 (8)	250	Opp	71			328564X	Furnished	442XFAHX-*3 (7)	250	Opp	61				Furnished
442ZLAHX-*3 (4)	250	Opp	79			328564X	Furnished	442XHAHX-*3 (8)	250	Opp	71				Furnished
442ZQAHX-*3 (4)	225	Opp	85			328564X	Furnished	442XLAHX-*3 (4)	250	Opp	79				Furnished
442ZRAHX-*3 (4)	225	Opp	99			328564X	Furnished	442XQAHX-*3 (4)	225	Opp	85				Furnished
442ZSAHX-*3 (4)	200	Opp	118			328564X	Furnished	442XRAHX-*3 (4)	225	Opp	99				Furnished
489XAAHX-*3 (5)	250	Opp	39				Furnished	442XSAHX-*3 (4)	200	Opp	118				Furnished
489XCAHX-*3 (6)	250	Opp	50				Furnished	442XUAHX-*3 (4)	195	Opp	140				Furnished
489XFAHX-*3 (7)	250	Opp	61				Furnished	442XWAHX-*3 (4)	175	Opp	165				Furnished
489XHAHX-*3 (8)	250	Opp	71				Furnished	442XXAHX-*3 (4)	140	Opp	195				Furnished
489XLAHX-*3 (4)	250	Opp	79				Furnished	660XFAHX-*3 (9)	375	Opp	61				Furnished
489XQAHX-*3 (4)	225	Opp	85				Furnished	660XQAHX-*3 (10)	375	Opp	85				Furnished
489XRAHX-*3 (4)	225	Opp	99				Furnished	660XSAHX-*3 (11)	325	Opp	118				Furnished
489XSAHX-*3 (4)	200	Opp	118				Furnished								
489XUAHX-*3 (4)	195	Opp	140				Furnished								
489XWAHX-*3 (4)	175	Opp	165				Furnished								
489XXAHX-*3 (4)	140	Opp	195				Furnished								
680XFAHX-*3 (9)	375	Opp	61				Furnished								
680XQAHX-*3 (10)	375	Opp	85				Furnished								

Continued Next Page

CAUTION: 660/680 Series: Applications above 1500 RPM output shaft speed, contact Chelsea Technical Service for approval.

CAUTION: Do not use geared adapters with 442 "A" and "C" ratios.

NOTE: The AK & XK output flanges can not be used with the "A" & "C" ratios on the 489 Series P.T.O.s due to mounting stud interference. Use a RA or RB rotatable flange for the XK and the RA for the AK flange.

NOTE: If Ordering the 230/231 Series with the Shaft Brake Option, order the "BA" Output for Automatic Transmissions and the "BD" Output for Manual Transmissions.

NOTE: The 422XBAH Must use one of the Geared Adapters Listed on the Application Page. Direction of Rotation Shown is the Final Output Shaft Rotation w/ Geared Adapter.

(1) Gear and Shaft Kit No. KXA-2-P-565
(2) Filler block furnished with P.T.O.
(3) Input Gear Part No. 5-P-1418
(4) Input Gear Part No. 5-P-1004
(5) Input Gear Part No. 5-P-1280
(6) Input Gear Part No. 5-P-1287
(7) Input Gear Part No. 5-P-1077
(8) Input Gear Part No. 5-P-1364
(9) Input Gear Part No. 5-P-1242
(10) Input Gear Part No. 5-P-1246
(11) Input Gear Part No. 5-P-1322

Parker Hannifin Corporation
Chelsea Products Division
Olive Branch, MS 38654 USA

RT-6609A
RT-7608LL
RT-8609

BOTTOM SIDE ONLY

TRANSMISSION GEAR DATA:
BOT 8-Bolt Opening Gear FORWARD of Centerline
33 Teeth - SPUR

PITCH LINE TO APERTURE FACE:
.8100" (20.5700MM)

RIGHT SIDE ONLY

TRANSMISSION GEAR DATA:
R.H. 6-Bolt Opening Gear FORWARD of Centerline
33 Teeth - SPUR

PITCH LINE TO APERTURE FACE:
1.0900" (27.6900MM)

Caution: Application Approval Required for P.T.O. Output Shaft Speeds Above 2500 R.P.M.

ONE SPEED - TWO GEAR - MECHANICAL SHIFT

BOTTOM Side P.T.O. Model	Inter. Torq.	Dir. Rot.	Engine % Hi	Engine % Rev	Filler Block	Adapter Assy.	Stud Kit
680XSAHX-*3 (11)	325	Opp	118				Furnished
823XBAHX-*3 (12)	500	Opp	42				Furnished
823XJAHX-*3 (13)	500	Opp	63				Furnished
823XMAHX-*3 (14)	500	Opp	74				Furnished
823XRAHX-*3 (15)	400	Opp	103				Furnished
823XTKTX-*3 (16)	500	Opp	124		8-A-165 (2)		Furnished
880XBAHX-*3 (17)	500	Opp	42				Furnished
880XDAHX-*3 (18)	500	Opp	49				Furnished
880XGAHX-*3 (19)	500	Opp	54				Furnished
880XJAHX-*3 (20)	500	Opp	63				Furnished
880XMAHX-*3 (21)	500	Opp	74				Furnished
880XQAHX-*3 (22)	450	Opp	87				Furnished
880XRAHX-*3 (23)	400	Opp	103				Furnished
880XTAHX-*3 (24)	500	Opp	132				Furnished

ONE SPEED - TWO GEAR - POWERSHIFT (AIR)

BOTTOM Side P.T.O. Model	Inter. Torq.	Dir. Rot.	Engine % Hi	Engine % Rev	Filler Block	Adapter Assy.	Stud Kit	RIGHT Side P.T.O. Model	Inter. Torq.	Dir. Rot.	Engine % Hi	Engine % Rev	Filler Block	Adapter Assy.	Stud Kit
230XAAJX-*3	250	Opp	32			328481X	Furnished	230XAAJX-*3	250	Opp	32				Furnished
230XBAJX-*3	250	Opp	42			328481X	Furnished	230XBAJX-*3	250	Opp	42				Furnished
230XDAJX-*3	250	Opp	49			328481X	Furnished	230XDAJX-*3	250	Opp	49				Furnished
230XKAJX-*3	250	Opp	66			328481X	Furnished	230XKAJX-*3	250	Opp	66				Furnished
230XQAJX-*3	250	Opp	87			328481X	Furnished	230XQAJX-*3	250	Opp	87				Furnished
230XUAJX-*3	225	Opp	140			328481X	Furnished	230XUAJX-*3	225	Opp	140				Furnished
236ZDAHX-*3 (4)	250	Opp	64			328564X	Furnished	236XQAHX-*3 (4)	250	Opp	111				Furnished
236ZKAHX-*3 (4)	250	Opp	82			328564X	Furnished	236XUAHX-*3 (4)	225	Opp	127				Furnished
885XBAHX-*3 (17)	500	Opp	42				Furnished	236XDAHX-*3 (4)	250	Opp	64				Furnished
885XGAHX-*3 (19)	500	Opp	54				Furnished	236XKAHX-*3 (4)	250	Opp	82				Furnished
885XJAHX-*3 (20)	500	Opp	63				Furnished								
885XMAHX-*3 (21)	500	Opp	74				Furnished								

Continued Next Page

CAUTION: 660/680 Series: Applications above 1500 RPM output shaft speed, contact Chelsea Technical Service for approval.

CAUTION: Do not use geared adapters with 442 "A" and "C" ratios.

NOTE: The AK & XK output flanges can not be used with the "A" & "C" ratios on the 489 Series P.T.O.s due to mounting stud interference. Use a RA or RB rotatable flange for the XK and the RA for the AK flange.

NOTE: If Ordering the 230/231 Series with the Shaft Brake Option, order the "BA" Output for Automatic Transmissions and the "BD" Output for Manual Transmissions.

NOTE: The 422XBAH Must use one of the Geared Adapters Listed on the Application Page. Direction of Rotation Shown is the Final Output Shaft Rotation w/ Geared Adapter.

(2) Filler block furnished with P.T.O.
(4) Input Gear Part No. 5-P-1004
(11) Input Gear Part No. 5-P-1322
(12) Input Gear Part No. 5-P-285
(13) Input Gear Part No. 5-P-325
(14) Input Gear Part No. 5-P-283
(15) Input Gear Part No. 5-P-721
(16) Input Gear Part No. 5-P-1395
(17) Input Gear Part No. 5-P-1100
(18) Input Gear Part No. 5-P-1101
(19) Input Gear Part No. 5-P-1135
(20) Input Gear Part No. 5-P-1102
(21) Input Gear Part No. 5-P-1103
(22) Input Gear Part No. 5-P-1385
(23) Input Gear Part No. 5-P-1104
(24) Input Gear Part No. 5-P-1105

January 2008

Parker Hannifin Corporation
Chelsea Products Division
Olive Branch, MS 38654 USA

RT-6609A
RT-7608LL
RT-8609

BOTTOM SIDE ONLY

TRANSMISSION GEAR DATA:
BOT 8-Bolt Opening Gear FORWARD of Centerline
33 Teeth - SPUR

PITCH LINE TO APERTURE FACE:
.8100" (20.5700MM)

RIGHT SIDE ONLY

TRANSMISSION GEAR DATA:
R.H. 6-Bolt Opening Gear FORWARD of Centerline
33 Teeth - SPUR

PITCH LINE TO APERTURE FACE:
1.0900" (27.6900MM)

Caution: Application Approval Required for P.T.O. Output Shaft Speeds Above 2500 R.P.M.

BOTTOM Side P.T.O. Model	Inter. Torq.	Dir. Rot.	Engine % Hi	Engine % Rev	Filler Block	Adapter Assy.	Stud Kit	RIGHT Side P.T.O. Model	Inter. Torq.	Dir. Rot.	Engine % Hi	Engine % Rev	Filler Block	Adapter Assy.	Stud Kit
ONE SPEED - FORWARD & REVERSE															
340SFAHX-*3 (25)	200	Opp	54	56	7-A-032(P)	328481X	Furnished	340XFAHX-*5 (25)	200	Opp	54	56	7-A-140 (2)		Furnished
340SFAHX-*5 (25)	200	Opp	54	56	7-A-032(P)	328481X	Furnished	352XSAHX-*3 (4)	140	Opp	119	154			Furnished
					7-A-140										
352ZSAHX-*3 (4)	140	Opp	119	154		328564X	Furnished								
863XBAHX-*5	500	Opp	42	52			Furnished								
ONE SPEED - DUAL SHAFT															
452ZSAHX-*3 (4)	140	Opp	119			328564X	Furnished	452XSAHX-*3 (4)	140	Opp	119				Furnished
GEARED ADAPTERS															
628XAHX-3AH					8-A-032		Furnished	626XAHX-3AH							Furnished
								630XAHX-3AH							Furnished
								645XAHX-3AH							Furnished

CAUTION: 660/680 Series: Applications above 1500 RPM output shaft speed, contact Chelsea Technical Service for approval.

CAUTION: Do not use geared adapters with 442 "A" and "C" ratios.

NOTE: The AK & XK output flanges can not be used with the "A" & "C" ratios on the 489 Series P.T.O.s due to mounting stud interference. Use a RA or RB rotatable flange for the XK and the RA for the AK flange.

NOTE: If Ordering the 230/231 Series with the Shaft Brake Option, order the "BA" Output for Automatic Transmissions and the "BD" Output for Manual Transmissions.

NOTE: The 422XBAH Must use one of the Geared Adapters Listed on the Application Page. Direction of Rotation Shown is the Final Output Shaft Rotation w/ Geared Adapter.

(2) Filler block furnished with P.T.O.
(4) Input Gear Part No. 5-P-1004
(25) Input Gear Part No. 5-P-581

Parker Hannifin Corporation
Chelsea Products Division
Olive Branch, MS 38654 USA

FS-6106A
FS-8206A
FS-8406A

LEFT SIDE ONLY	RIGHT SIDE ONLY
TRANSMISSION GEAR DATA: L.H. 6-Bolt Opening Gear FORWARD of Centerline 50 Teeth - R.H. HELIX **PITCH LINE TO APERTURE FACE:** 1.1800" (29.9720MM)	**TRANSMISSION GEAR DATA:** R.H. 8-Bolt Opening Gear FORWARD of Centerline 50 Teeth - R.H. HELIX **PITCH LINE TO APERTURE FACE:** .9100" (23.1140MM)

Caution: Application Approval Required for P.T.O. Output Shaft Speeds Above 2500 R.P.M.

LEFT Side P.T.O. Model	Inter. Torq.	Dir. Rot.	Engine % Hi	Engine % Rev	Filler Block	Adapter Assy.	Stud Kit	RIGHT Side P.T.O. Model	Inter. Torq.	Dir. Rot.	Engine % Hi	Engine % Rev	Filler Block	Adapter Assy.	Stud Kit
ONE SPEED - SINGLE GEAR - MECHANICAL SHIFT															
100XRDUX-*3 (1)	125	Eng	78				Furnished	100XRDUX-*3 (1)	125	Eng	78			328481X	Furnished
ONE SPEED - TWO GEAR - MECHANICAL SHIFT															
442XFDUX-*5 (2)	250	Opp	46				Furnished	442XFDUX-*3 (2)	250	Opp	46			328481X	Furnished
442XLDUX-*5 (3)	250	Opp	60				Furnished	442XLDUX-*3 (3)	250	Opp	60			328481X	Furnished
442XQDUX-*5 (3)	225	Opp	64				Furnished	442XQDUX-*3 (3)	225	Opp	64			328481X	Furnished
442XRDUX-*5 (3)	225	Opp	74				Furnished	442XRDUX-*3 (3)	225	Opp	74			328481X	Furnished
442XSDUX-*5 (3)	200	Opp	89				Furnished	442XSDUX-*3 (3)	200	Opp	89			328481X	Furnished
442XUDUX-*5 (3)	195	Opp	106				Furnished	442XUDUX-*3 (3)	195	Opp	106			328481X	Furnished
442XWDUX-*5 (3)	175	Opp	124				Furnished	442XWDUX-*3 (3)	175	Opp	124			328481X	Furnished
442XXDUX-*5 (3)	140	Opp	147				Furnished	442XXDUX-*3 (3)	140	Opp	147			328481X	Furnished
								489XFDUX-*3 (2)	250	Opp	55				Furnished
								489XLDUX-*3 (3)	250	Opp	60				Furnished
								489XQDUX-*3 (3)	225	Opp	64				Furnished
								489XRDUX-*3 (3)	225	Opp	74				Furnished
								489XSDUX-*3 (3)	200	Opp	89				Furnished
								489XUDUX-*3 (3)	195	Opp	106				Furnished
								489XWDUX-*3 (3)	175	Opp	124				Furnished
								489XXDUX-*3 (3)	140	Opp	147				Furnished
								880XMDUX-*3 (4)	500	Opp	58				Furnished
								880XRDUX-*3 (5)	400	Opp	81				Furnished
								880XTDUX-*3 (6)	350	Opp	108				Furnished
ONE SPEED - TWO GEAR - POWERSHIFT (AIR)															
236XDDUX-*5 (3)	250	Opp	49				Furnished	236XDDUX-*3 (3)	250	Opp	49			328481X	Furnished
236XKDUX-*5 (3)	250	Opp	62				Furnished	236XKDUX-*3 (3)	250	Opp	62			328481X	Furnished
236XQDUX-*5 (3)	250	Opp	83				Furnished	236XQDUX-*3 (3)	250	Opp	83			328481X	Furnished
236XUDUX-*5 (3)	225	Opp	96				Furnished	236XUDUX-*3 (3)	225	Opp	96			328481X	Furnished
ONE SPEED - FORWARD & REVERSE															
340XFDUX-*5 (7)	200	Opp	42	44	7-A-140 (8)		Furnished	340XFDUX-*3 (7)	200	Opp	42	44	7-A-140 (8)	328481X	Furnished
352XSDUX-*5 (3)	140	Opp	90	116			Furnished	352XSDUX-*3 (3)	140	Opp	90	116		328481X	Furnished
ONE SPEED - DUAL SHAFT															
452XSDUX-*3 (3)	140	Opp	90				Furnished	452XSDUX-*3 (3)	140	Opp	90			328481X	Furnished
GEARED ADAPTERS															
626XDUX-4HH							Furnished	628XDUX-3HH							Furnished
630XDUX-4HH							Furnished								
645XDUX-4HH							Furnished								

(1) Gear and Shaft Kit No. KXA-2-P-633
(2) Input Gear Part No. 5-P-1088
(3) Input Gear Part No. 5-P-1050
(4) Input Gear Part No. 5-P-1130
(5) Input Gear Part No. 5-P-1176
(6) Input Gear Part No. 5-P-1131
(7) Input Gear Part No. 5-P-883
(8) Filler block furnished with P.T.O.

January 2008

Parker Hannifin Corporation
Chelsea Products Division
Olive Branch, MS 38654 USA

FS-5306A
FS-5406A
FS-6206A
FS-6306A
FS-6406A

LEFT SIDE ONLY

TRANSMISSION GEAR DATA:
L.H. 6-Bolt Opening Gear FORWARD of Centerline
38 Teeth - R.H. HELIX
PITCH LINE TO APERTURE FACE:
1.0850" (27.5590MM)

RIGHT SIDE ONLY

TRANSMISSION GEAR DATA:
R.H. 6-Bolt Opening Gear FORWARD of Centerline
38 Teeth - R.H. HELIX
PITCH LINE TO APERTURE FACE:
1.0850" (27.5590MM)

Caution: Application Approval Required for P.T.O. Output Shaft Speeds Above 2500 R.P.M.

LEFT Side P.T.O. Model	Inter. Torq.	Dir. Rot.	Engine % Hi	Engine % Rev	Filler Block	Adapter Assy.	Stud Kit	RIGHT Side P.T.O. Model	Inter. Torq.	Dir. Rot.	Engine % Hi	Engine % Rev	Filler Block	Adapter Assy.	Stud Kit
ONE SPEED - TWO GEAR - MECHANICAL SHIFT															
442XAESX-*5 (1)	250	Opp	32		7-A-062		Furnished	442XAESX-*3 (1)	250	Opp	32		7-A-062		Furnished
442XCESX-*5 (2)	250	Opp	41		7-A-062		Furnished	442XCESX-*3 (2)	250	Opp	41		7-A-062		Furnished
442XFESX-*5 (3)	250	Opp	51		7-A-062		Furnished	442XFESX-*3 (3)	250	Opp	51		7-A-062		Furnished
442XLESX-*5 (4)	250	Opp	66		7-A-062		Furnished	442XLESX-*3 (4)	250	Opp	66		7-A-062		Furnished
442XQESX-*5 (4)	225	Opp	71		7-A-062		Furnished	442XQESX-*3 (4)	225	Opp	71		7-A-062		Furnished
442XRESX-*5 (4)	225	Opp	82		7-A-062		Furnished	442XRESX-*3 (4)	225	Opp	82		7-A-062		Furnished
442XSESX-*5 (4)	200	Opp	98		7-A-062		Furnished	442XSESX-*3 (4)	200	Opp	98		7-A-062		Furnished
442XUESX-*5 (4)	195	Opp	117		7-A-062		Furnished	442XUESX-*3 (4)	195	Opp	117		7-A-062		Furnished
442XWESX-*5 (4)	175	Opp	138		7-A-062		Furnished	442XWESX-*3 (4)	175	Opp	138		7-A-062		Furnished
442XXESX-*5 (4)	140	Opp	163		7-A-062		Furnished	442XXESX-*3 (4)	140	Opp	163		7-A-062		Furnished
ONE SPEED - TWO GEAR - POWERSHIFT (AIR)															
236XDESX-*5 (4)	250	Opp	53		7-A-062		Furnished	236XDESX-*3 (4)	250	Opp	53		7-A-062		Furnished
236XKESX-*5 (4)	250	Opp	68		7-A-062		Furnished	236XKESX-*3 (4)	250	Opp	68		7-A-062		Furnished
236XQESX-*5 (4)	250	Opp	93		7-A-062		Furnished	236XQESX-*3 (4)	250	Opp	93		7-A-062		Furnished
236XUESX-*5 (4)	225	Opp	106		7-A-062		Furnished	236XUESX-*3 (4)	225	Opp	106		7-A-062		Furnished
ONE SPEED - FORWARD & REVERSE															
340XFESX-*5 (5)	200	Opp	47	49	7-A-140 (6) 7-A-093		328170-76X	340XFESX-*5 (5)	200	Opp	47	49	7-A-140 (6) 7-A-093		328170-76X
352XSESX-*5 (4)	140	Opp	99	129	7-A-062		Furnished	352XSESX-*3 (4)	140	Opp	99	129	7-A-062		Furnished
ONE SPEED - DUAL SHAFT															
452XSESX-*3 (4)	140	Opp	99		7-A-062		Furnished	452XSESX-*3 (4)	140	Opp	99		7-A-062		Furnished
GEARED ADAPTERS															
626XESX-4HL					7-A-062		Furnished	626XESX-3HL					7-A-062		Furnished
630XESX-4HL					7-A-062		Furnished	630XESX-3HL					7-A-062		Furnished
645XESX-4HL					7-A-062		Furnished	645XESX-3HL					7-A-062		Furnished

CAUTION: Do not use geared adapters with 442 "A" and "C" ratios.

NOTE: Constant mesh P.T.O.s only on this application

(1) Input Gear Part No. 5-P-1285
(2) Input Gear Part No. 5-P-1292
(3) Input Gear Part No. 5-P-1092
(4) Input Gear Part No. 5-P-1059
(5) Input Gear Part No. 5-P-884
(6) Filler block furnished with P.T.O.

Parker Hannifin Corporation
Chelsea Products Division
Olive Branch, MS 38654 USA

FS-6205A

FS-6305A

LEFT SIDE ONLY	RIGHT SIDE ONLY
TRANSMISSION GEAR DATA: L.H. 6-Bolt Opening Gear FORWARD of Centerline 39 Teeth - R.H. HELIX **PITCH LINE TO APERTURE FACE:** 1.0000" (25.4000MM)	**TRANSMISSION GEAR DATA:** R.H. 6-Bolt Opening Gear FORWARD of Centerline 39 Teeth - R.H. HELIX **PITCH LINE TO APERTURE FACE:** 1.0000" (25.4000MM)

Caution: Application Approval Required for P.T.O. Output Shaft Speeds Above 2500 R.P.M.

LEFT Side P.T.O. Model	Inter. Torq.	Dir. Rot.	Engine % Hi	Engine % Rev	Filler Block	Adapter Assy.	Stud Kit	RIGHT Side P.T.O. Model	Inter. Torq.	Dir. Rot.	Engine % Hi	Engine % Rev	Filler Block	Adapter Assy.	Stud Kit
ONE SPEED - TWO GEAR - MECHANICAL SHIFT															
442KAESX-*5 (1)	250	Opp	30		7-A-165		7170-3X	442KAESX-*3 (1)	250	Opp	30		7-A-165		7170-3X
442KCESX-*5 (2)	250	Opp	39		7-A-165		7170-3X	442KCESX-*3 (2)	250	Opp	39		7-A-165		7170-3X
442KFESX-*5 (3)	250	Opp	48		7-A-165		7170-3X	442KFESX-*3 (3)	250	Opp	48		7-A-165		7170-3X
442KLESX-*5 (4)	250	Opp	62		7-A-165		7170-3X	442KLESX-*3 (4)	250	Opp	62		7-A-165		7170-3X
442KQESX-*5 (4)	225	Opp	67		7-A-165		7170-3X	442KQESX-*3 (4)	225	Opp	67		7-A-165		7170-3X
447KQESX-*5 (5)	225	Opp	67		7-A-165		7170-3X	447KQESX-*3 (5)	225	Opp	67		7-A-165		7170-3X
447KSESX-*5 (6)	200	Opp	93		7-A-165		7170-3X	447KSESX-*3 (6)	200	Opp	93		7-A-165		7170-3X
447KUESX-*5 (7)	195	Opp	110		7-A-165		7170-3X	447KUESX-*3 (7)	195	Opp	110		7-A-165		7170-3X
447KWESX-*5 (8)	175	Opp	130		7-A-165		7170-3X	447KWESX-*3 (8)	175	Opp	130		7-A-165		7170-3X
ONE SPEED - TWO GEAR - POWERSHIFT (AIR)															
236KDESX-*5 (4)	250	Opp	50		7-A-165		7170-3X	236KDESX-*3 (4)	250	Opp	50		7-A-165		7170-3X
ONE SPEED - FORWARD & REVERSE															
340XFESX-*5 (9)	200	Opp	44	46	7-A-140 (10) 7-A-200		328170-76X	340XFESX-*5 (9)	200	Opp	44	46	7-A-140 (10) 7-A-200		328170-76X

NOTE: Use constant mesh P.T.O.s only in this application.

NOTE: The 100 Series and the 442 Series R, S, U, W, and X ratios will interfere with the adjacent gear in the transmission

(1) Input Gear Part No. 5-P-1285
(2) Input Gear Part No. 5-P-1292
(3) Input Gear Part No. 5-P-1092
(4) Input Gear Part No. 5-P-1059
(5) Input Gear Part No. 5-P-869
(6) Input Gear Part No. 5-P-870
(7) Input Gear Part No. 5-P-871
(8) Input Gear Part No. 5-P-872
(9) Input Gear Part No. 5-P-884
(10) Filler block furnished with P.T.O.

FS-6205B
FS-6305B

LEFT SIDE ONLY	RIGHT SIDE ONLY
TRANSMISSION GEAR DATA: L.H. 6-Bolt Opening Gear FORWARD of Centerline 41 Teeth - R.H. HELIX **PITCH LINE TO APERTURE FACE:** .8860" (22.5044MM)	**TRANSMISSION GEAR DATA:** R.H. 6-Bolt Opening Gear FORWARD of Centerline 41 Teeth - R.H. HELIX **PITCH LINE TO APERTURE FACE:** .8660" (22.5044MM)

Caution: Application Approval Required for P.T.O. Output Shaft Speeds Above 2500 R.P.M.

LEFT Side P.T.O. Model	Inter. Torq.	Dir. Rot.	Engine % Hi	Engine % Rev	Filler Block	Adapter Assy.	Stud Kit	RIGHT Side P.T.O. Model	Inter. Torq.	Dir. Rot.	Engine % Hi	Engine % Rev	Filler Block	Adapter Assy.	Stud Kit
ONE SPEED - TWO GEAR - MECHANICAL SHIFT															
447XQETX-*5 (1)	200	Opp	82				Furnished	447XQETX-*3 (1)	200	Opp	82				Furnished
447XSETX-*5 (2)	200	Opp	113				Furnished	447XSETX-*3 (2)	200	Opp	113				Furnished
447XUETX-*5 (3)	195	Opp	134				Furnished	447XUETX-*3 (3)	195	Opp	134				Furnished
447XWETX-*5 (4)	175	Opp	158				Furnished	447XWETX-*3 (4)	175	Opp	158				Furnished
ONE SPEED - FORWARD & REVERSE															
340XFETX-*5 (5)	200	Opp	44	46	7-A-140 (6) 7-A-300		7170-3X	340XFETX-*5 (5)	200	Opp	44	46	7-A-140 (6) 7-A-300		7170-3X

(1) Input Gear Part No. 5-P-865
(2) Input Gear Part No. 5-P-866
(3) Input Gear Part No. 5-P-867
(4) Input Gear Part No. 5-P-868
(5) Input Gear Part No. 5-P-948
(6) Filler block furnished with P.T.O.

T-14607A

T-14607B

LEFT SIDE ONLY

TRANSMISSION GEAR DATA:

L.H. 8-Bolt Opening Gear FORWARD of Centerline

78 Teeth - SPUR

PITCH LINE TO APERTURE FACE:

.8650" (21.9710MM)

RIGHT SIDE ONLY

TRANSMISSION GEAR DATA:

R.H. 6-Bolt Opening Gear FORWARD of Centerline

78 Teeth - SPUR

PITCH LINE TO APERTURE FACE:

.9740" (24.7400MM)

Caution: Application Approval Required for P.T.O. Output Shaft Speeds Above 2500 R.P.M.

LEFT Side P.T.O. Model	Inter. Torq.	Dir. Rot.	Engine % Hi	Engine % Rev	Filler Block	Adapter Assy.	Stud Kit	RIGHT Side P.T.O. Model	Inter. Torq.	Dir. Rot.	Engine % Hi	Engine % Rev	Filler Block	Adapter Assy.	Stud Kit
ONE SPEED - TWO GEAR - MECHANICAL SHIFT															
489XFEVX-*5 (1)	250	Opp	57		8-A-062		Furnished	442KFEVX-*5 (1)	250	Opp	57		7-A-187		7170-3X
489XLEVX-*5 (2)	250	Opp	73		8-A-062		Furnished	442KLEVX-*5 (2)	250	Opp	73		7-A-187		7170-3X
489XQEVX-*5 (2)	225	Opp	79		8-A-062		Furnished	442KQEVX-*5 (2)	225	Opp	79		7-A-187		7170-3X
489XREVX-*5 (2)	225	Opp	92		8-A-062		Furnished	442KREVX-*5 (2)	225	Opp	92		7-A-187		7170-3X
489XSEVX-*5 (2)	200	Opp	109		8-A-062		Furnished	442KSEVX-*5 (2)	200	Opp	109		7-A-187		7170-3X
489XUEVX-*5 (2)	195	Opp	130		8-A-062		Furnished	442KUEVX-*5 (2)	195	Opp	130		7-A-187		7170-3X
489XWEVX-*5 (2)	175	Opp	153		8-A-062		Furnished	442KWEVX-*5 (2)	175	Opp	153		7-A-187		7170-3X
489XXEVX-*5 (2)	140	Opp	181		8-A-062		Furnished	442KXEVX-*5 (2)	140	Opp	181		7-A-187		7170-3X
ONE SPEED - TWO GEAR - POWERSHIFT (AIR)															
								236KDEVX-*5 (2)	250	Opp	59		7-A-187		7170-3X
								236KKEVX-*5 (2)	250	Opp	76		7-A-187		7170-3X
								236KQEVX-*5 (2)	250	Opp	103		7-A-187		7170-3X
								236KUEVX-*5 (2)	225	Opp	118		7-A-187		7170-3X
ONE SPEED - FORWARD & REVERSE															
352XSEVX-*5 (2)	140	Opp	110	143	7-A-062(P)	328481X	328170-76X	352XSEVX-*5 (2)	140	Opp	110	143	7-A-187		7170-3X
ONE SPEED - DUAL SHAFT															
452XSEVX-*5 (2)	140	Opp	110		7-A-062(P)	328481X	328170-76X	452XSEVX-*5 (2)	140	Opp	110		7-A-187		7170-3X
GEARED ADAPTERS															
628XEVX-4EV	250				8-A-062		Furnished	626KEVX-3EV					7-A-187		7170-3X
								630KEVX-3EV					7-A-187		7170-3X
								645KEVX-3EV					7-A-187		7170-3X

NOTE: Use Constant Mesh P.T.O.s only.

NOTE: Recommend using assembly arrangement "5" on R.H. side. With assembly arrangement "3", there may be interference with the output shaft of the P.T.O. and the rear cover on the transmission.

(1) Input Gear Part No. 5-P-1094
(2) Input Gear Part No. 5-P-1060

Parker Chelsea

Parker Hannifin Corporation
Chelsea Products Division
Olive Branch, MS 38654 USA

TX-14607B

LEFT SIDE ONLY	RIGHT SIDE ONLY
TRANSMISSION GEAR DATA: L.H. 8-Bolt Opening Gear REAR of Centerline 78 Teeth - SPUR **PITCH LINE TO APERTURE FACE:** .8650" (21.9710MM)	**TRANSMISSION GEAR DATA:** R.H. 6-Bolt Opening Gear REAR of Centerline 78 Teeth - SPUR **PITCH LINE TO APERTURE FACE:** .9740" (24.7400MM)

Caution: Application Approval Required for P.T.O. Output Shaft Speeds Above 2500 R.P.M.

LEFT Side P.T.O. Model	Inter. Torq.	Dir. Rot.	Engine % Hi	Engine % Rev	Filler Block	Adapter Assy.	Stud Kit	RIGHT Side P.T.O. Model	Inter. Torq.	Dir. Rot.	Engine % Hi	Engine % Rev	Filler Block	Adapter Assy.	Stud Kit
ONE SPEED - TWO GEAR - MECHANICAL SHIFT															
489XFEVX-*4 (1)	250	Opp	76		8-A-032		Furnished	442KFEVX-*4 (1)	250	Opp	76		7-A-187		7170-3X
489XLEVX-*4 (2)	250	Opp	98		8-A-032		Furnished	442KLEVX-*4 (2)	250	Opp	98		7-A-187		7170-3X
489XQEVX-*4 (2)	225	Opp	106		8-A-032		Furnished	442KQEVX-*4 (2)	225	Opp	106		7-A-187		7170-3X
489XREVX-*4 (2)	225	Opp	122		8-A-032		Furnished	442KREVX-*4 (2)	225	Opp	122		7-A-187		7170-3X
								447KQEVX-*4 (3)	225	Opp	106		7-A-187		7171-3X
								447KREVX-*4 (4)	225	Opp	122		7-A-187		7170-3X
								447KSEVX-*4 (5)	200	Opp	146		7-A-187		7170-3X
								447KUEVX-*4 (6)	195	Opp	174		7-A-187		7170-3X
								447KWEVX-*4 (7)	175	Opp	204		7-A-187		7170-3X
ONE SPEED - TWO GEAR - POWERSHIFT (AIR)															
								236KDEVX-*4 (2)	250	Opp	79		7-A-187		7170-3X
								236KKEVX-*4 (2)	250	Opp	101		7-A-187		7170-3X
ONE SPEED - FORWARD & REVERSE															
352XSEVX-*4 (2)	140	Opp	148	191	7-A-062(P)	328481X	328170-76X	352XSEVX-*4 (2)	140	Opp	148	191	7-A-187		7170-3X
ONE SPEED - DUAL SHAFT															
452XSEVX-*6 (2)	140	Opp	148		7-A-062(P)	328481X	328170-76X	452XSEVX-*6 (2)	140	Opp	148		7-A-187		7170-3X
GEARED ADAPTERS															
628XEVX-3EV					8-A-062		Furnished	626KEVX-4EV					7-A-187		7170-3X
								630KEVX-4EV					7-A-187		7170-3X
								645KEVX-4EV					7-A-187		7170-3X

Note: The 442/489 S,U,W and X ratio gears interfer with the outside diameter of the 78 tooth transmission gear.

(1) Input Gear Part No. 5-P-1094
(2) Input Gear Part No. 5-P-1060
(3) Input Gear Part No. 5-P-1205
(4) Input Gear Part No. 5-P-1219
(5) Input Gear Part No. 5-P-1206
(6) Input Gear Part No. 5-P-1207
(7) Input Gear Part No. 5-P-1208

June 2008

Parker Hannifin Corporation
Chelsea Products Division
Olive Branch, MS 38654 USA

FS-4205A

LEFT SIDE ONLY	RIGHT SIDE ONLY
TRANSMISSION GEAR DATA: L.H. 6-Bolt Opening Gear FORWARD of Centerline 28 Teeth - R.H. HELIX **PITCH LINE TO APERTURE FACE:** 1.1469" (29.1313MM)	**TRANSMISSION GEAR DATA:** R.H. 6-Bolt Opening Gear FORWARD of Centerline 28 Teeth - R.H. HELIX **PITCH LINE TO APERTURE FACE:** 1.1469" (29.1313MM)

Caution: Application Approval Required for P.T.O. Output Shaft Speeds Above 2500 R.P.M.

LEFT Side P.T.O. Model	Inter. Torq.	Dir. Rot.	Engine % Hi	Engine % Rev	Filler Block	Adapter Assy.	Stud Kit	RIGHT Side P.T.O. Model	Inter. Torq.	Dir. Rot.	Engine % Hi	Engine % Rev	Filler Block	Adapter Assy.	Stud Kit
ONE SPEED - TWO GEAR - MECHANICAL SHIFT															
442XFEWX-*5 (1)	250	Opp	36				Furnished	442XFEWX-*3 (1)	250	Opp	36				Furnished
442XLEWX-*5 (2)	250	Opp	47				Furnished	442XLEWX-*3 (2)	250	Opp	47				Furnished
442XQEWX-*5 (2)	225	Opp	51				Furnished	442XQEWX-*3 (2)	225	Opp	51				Furnished
442XREWX-*5 (2)	225	Opp	59				Furnished	442XREWX-*3 (2)	225	Opp	59				Furnished
442XSEWX-*5 (2)	200	Opp	70				Furnished	442XSEWX-*3 (2)	200	Opp	70				Furnished
442XUEWX-*5 (2)	195	Opp	84				Furnished	442XUEWX-*3 (2)	195	Opp	84				Furnished
442XWEWX-*5 (2)	175	Opp	98				Furnished	442XWEWX-*3 (2)	175	Opp	98				Furnished
442XXEWX-*5 (2)	140	Opp	116				Furnished	442XXEWX-*3 (2)	140	Opp	116				Furnished
ONE SPEED - TWO GEAR - POWERSHIFT (AIR)															
236XDEWX-*5 (2)	250	Opp	38				Furnished	236XDEWX-*3 (2)	250	Opp	38				Furnished
236XKEWX-*5 (2)	250	Opp	49				Furnished	236XKEWX-*3 (2)	250	Opp	49				Furnished
236XQEWX-*5 (2)	250	Opp	66				Furnished	236XQEWX-*3 (2)	250	Opp	66				Furnished
236XUEWX-*5 (2)	225	Opp	75				Furnished	236XUEWX-*3 (2)	225	Opp	75				Furnished
ONE SPEED - FORWARD & REVERSE															
340XFEWX-*5 (3)	200	Opp	33	35	7-A-140 (4)		Furnished	340XFEWX-*5 (3)	200	Opp	33	35	7-A-140 (4)		Furnished
352XSEWX-*5 (2)	140	Opp	71	92			Furnished	352XSEWX-*3 (2)	140	Opp	71	92			Furnished
ONE SPEED - DUAL SHAFT															
452XSEWX-*3 (2)	140	Opp	71				Furnished	452XSEWX-*3 (2)	140	Opp	71				Furnished
GEARED ADAPTERS															
626XEWX-4HM							Furnished	626XEWX-3HM							Furnished
630XEWX-4HM							Furnished	630XEWX-3HM							Furnished
645XEWX-4HM							Furnished	645XEWX-3HM							Furnished

NOTE: This application is for model FS-3005A AFTER September, 1988. For applications PRIOR to September, 1988, use application no. FLR-74.

NOTE: Use constant mesh P.T.O.s only on this application.

(1) Input Gear Part No. 5-P-1095
(2) Input Gear Part No. 5-P-1061
(3) Input Gear Part No. 5-P-886
(4) Filler block furnished with P.T.O.

Parker Chelsea

Parker Hannifin Corporation
Chelsea Products Division
Olive Branch, MS 38654 USA

FS-4205B

LEFT SIDE ONLY	RIGHT SIDE ONLY
TRANSMISSION GEAR DATA: L.H. 6-Bolt Opening Gear FORWARD of Centerline 28 Teeth - R.H. HELIX **PITCH LINE TO APERTURE FACE:** 1.1469" (29.1313MM)	**TRANSMISSION GEAR DATA:** R.H. 6-Bolt Opening Gear FORWARD of Centerline 28 Teeth - R.H. HELIX **PITCH LINE TO APERTURE FACE:** 1.1469" (29.1313MM)

Caution: Application Approval Required for P.T.O. Output Shaft Speeds Above 2500 R.P.M.

LEFT Side P.T.O. Model	Inter. Torq.	Dir. Rot.	Engine % Hi	Engine % Rev	Filler Block	Adapter Assy.	Stud Kit	RIGHT Side P.T.O. Model	Inter. Torq.	Dir. Rot.	Engine % Hi	Engine % Rev	Filler Block	Adapter Assy.	Stud Kit
ONE SPEED - TWO GEAR - MECHANICAL SHIFT															
442XFEWX-*5 (1)	250	Opp	42				Furnished	442XFEWX-*3 (1)	250	Opp	42				Furnished
442XLEWX-*5 (2)	250	Opp	54				Furnished	442XLEWX-*3 (2)	250	Opp	54				Furnished
442XQEWX-*5 (2)	225	Opp	59				Furnished	442XQEWX-*3 (2)	225	Opp	59				Furnished
442XREWX-*5 (2)	225	Opp	68				Furnished	442XREWX-*3 (2)	225	Opp	68				Furnished
442XSEWX-*5 (2)	200	Opp	81				Furnished	442XSEWX-*3 (2)	200	Opp	81				Furnished
442XUEWX-*5 (2)	195	Opp	96				Furnished	442XUEWX-*3 (2)	195	Opp	96				Furnished
442XWEWX-*5 (2)	175	Opp	113				Furnished	442XWEWX-*3 (2)	175	Opp	113				Furnished
442XXEWX-*5 (2)	140	Opp	134				Furnished	442XXEWX-*3 (2)	140	Opp	134				Furnished
ONE SPEED - TWO GEAR - POWERSHIFT (AIR)															
236XDEWX-*5 (2)	250	Opp	44				Furnished	236XDEWX-*3 (2)	250	Opp	44				Furnished
236XKEWX-*5 (2)	250	Opp	57				Furnished	236XKEWX-*3 (2)	250	Opp	57				Furnished
236XQEWX-*5 (2)	250	Opp	76				Furnished	236XQEWX-*3 (2)	250	Opp	76				Furnished
236XUEWX-*5 (2)	225	Opp	87				Furnished	236XUEWX-*3 (2)	225	Opp	87				Furnished
ONE SPEED - FORWARD & REVERSE															
340XFEWX-*5 (3)	200	Opp	38	40	7-A-140 (4)		Furnished	340XFEWX-*5 (3)	200	Opp	38	40	7-A-140 (4)		Furnished
352XSEWX-*5 (2)	140	Opp	82	106			Furnished	352XSEWX-*3 (2)	140	Opp	82	106			Furnished
ONE SPEED - DUAL SHAFT															
452XSEWX-*3 (2)	140	Opp	82				Furnished	452XSEWX-*3 (2)	140	Opp	82				Furnished
GEARED ADAPTERS															
626XEWX-4HM							Furnished	626XEWX-3HM							Furnished
630XEWX-4HM							Furnished	630XEWX-3HM							Furnished
645XEWX-4HM							Furnished	645XEWX-3HM							Furnished

NOTE: This application is for model FS-3005B AFTER September, 1988. For applications PRIOR to September, 1988, use application no. FLR-76.

(1) Input Gear Part No. 5-P-1095
(2) Input Gear Part No. 5-P-1061
(3) Input Gear Part No. 5-P-886
(4) Filler block furnished with P.T.O.

Parker Hannifin Corporation
Chelsea Products Division
Olive Branch, MS 38654 USA

FS-8209A

LEFT SIDE ONLY

TRANSMISSION GEAR DATA:

L.H. 6-Bolt Opening Gear CENTER of Centerline

23 Teeth - SPUR

PITCH LINE TO APERTURE FACE:

1.1480" (29.1592MM)

Caution: Application Approval Required for P.T.O. Output Shaft Speeds Above 2500 R.P.M.

LEFT Side P.T.O. Model	Inter. Torq.	Dir. Rot.	Engine % Hi	Engine % Rev	Filler Block	Adapter Assy.	Stud Kit	P.T.O. Model	Inter. Torq.	Dir. Rot.	Engine % Hi	Engine % Rev	Filler Block	Adapter Assy.	Stud Kit
ONE SPEED - TWO GEAR - MECHANICAL SHIFT															
442XFAHX-*6 (1)	250	Opp	37		7-A-165	329182-1X	Furnished								
442XHAHX-*6 (2)	250	Opp	43		7-A-165	329182-1X	Furnished								
442XLAHX-*6 (3)	250	Opp	48		7-A-165	329182-1X	Furnished								
442XQAHX-*6 (3)	225	Opp	51		7-A-165	329182-1X	Furnished								
442XRAHX-*6 (3)	225	Opp	60		7-A-165	329182-1X	Furnished								
442XSAHX-*6 (3)	200	Opp	71		7-A-165	329182-1X	Furnished								
442XUAHX-*6 (3)	195	Opp	84		7-A-165	329182-1X	Furnished								
442XWAHX-*6 (3)	175	Opp	99		7-A-165	329182-1X	Furnished								
442XXAHX-*6 (3)	140	Opp	118		7-A-165	329182-1X	Furnished								
447GQGPX-*5 (4)	225	Eng	37				Furnished								
447GRGPX-*5 (5)	225	Eng	43				Furnished								
447GSGPX-*5 (6)	200	Eng	51				Furnished								
447GUGPX-*5 (7)	195	Eng	61				Furnished								
447GWGPX-*5 (8)	175	Eng	71				Furnished								
ONE SPEED - TWO GEAR - POWERSHIFT (AIR)															
230XKAJX-*6	250	Opp	39		7-A-165	329182-1X	Furnished								
230XQAJX-*6	250	Opp	53		7-A-165	329182-1X	Furnished								
230XUAJX-*6	225	Opp	84		7-A-165	329182-1X	Furnished								

NOTE: The 100 Series will not mount on the right side due to interference with the low ratio housing. Two gear 8-bolt units will not mount due to interference at the rear cover.

NOTE: Adapters with cluster gears cannot be used for this application.

NOTE: If Ordering the 230/231 Series with the Shaft Brake Option, order the "BA" Output for Automatic Transmissions and the "BD" Output for Manual Transmissions.

(1) Input Gear Part No. 5-P-1077
(2) Input Gear Part No. 5-P-1364
(3) Input Gear Part No. 5-P-1004
(4) Input Gear Part No. 5-P-1145
(5) Input Gear Part No. 5-P-1215
(6) Input Gear Part No. 5-P-1146
(7) Input Gear Part No. 5-P-1147
(8) Input Gear Part No. 5-P-1148

FRO-11210C	FRO-16210C
FRO-12210C	FRO-16210R
FRO-13210C	FRO-17210C
FRO-14210C	FRO-18210C
FRO-15210C	

BOTTOM SIDE ONLY

TRANSMISSION GEAR DATA:
BOT 8-Bolt Opening Gear FORWARD of Centerline
47 Teeth - SPUR
PITCH LINE TO APERTURE FACE:
.8050" (20.4470MM)

RIGHT SIDE ONLY

TRANSMISSION GEAR DATA:
R.H. 6-Bolt Opening Gear FORWARD of Centerline
45 Teeth - SPUR
PITCH LINE TO APERTURE FACE:
1.0850" (27.5600MM)

Caution: Application Approval Required for P.T.O. Output Shaft Speeds Above 2500 R.P.M.

BOTTOM Side P.T.O. Model	Inter. Torq.	Dir. Rot.	Engine % Hi	Engine % Rev	Filler Block	Adapter Assy.	Stud Kit	RIGHT Side P.T.O. Model	Inter. Torq.	Dir. Rot.	Engine % Hi	Engine % Rev	Filler Block	Adapter Assy.	Stud Kit
ONE SPEED - SINGLE GEAR - MECHANICAL SHIFT															
812GKAHX-*3	382	Eng	110				Furnished								
ONE SPEED - TWO GEAR - MECHANICAL SHIFT															
489GAAHX-*3 (1)	250	Opp	64				Furnished	442GAAHX-*3 (1)	250	Opp	62				Furnished
489GCAHX-*3 (2)	250	Opp	82				Furnished	442GCAHX-*3 (2)	250	Opp	79				Furnished
489GFAHX-*3 (3)	250	Opp	102				Furnished	442GFAHX-*3 (3)	250	Opp	97				Furnished
489GHAHX-*3 (4)	250	Opp	118				Furnished	442GHAHX-*3 (4)	250	Opp	112				Furnished
489GLAHX-*3 (5)	250	Opp	132				Furnished	442GLAHX-*3 (5)	250	Opp	126				Furnished
489GQAHX-*3 (5)	225	Opp	142				Furnished	442GQAHX-*3 (5)	225	Opp	136				Furnished
489GRAHX-*3 (5)	225	Opp	164				Furnished	442GRAHX-*3 (5)	225	Opp	157				Furnished
489GSAHX-*3 (5)	200	Opp	195				Furnished	442GSAHX-*3 (5)	200	Opp	187				Furnished
489GUAHX-*3 (5)	180	Opp	233				Furnished	660GFAHX-*3 (6)	375	Opp	97				Furnished
489GWAHX-*3 (5)	153	Opp	274				Furnished	660GQAHX-*3 (7)	308	Opp	136				Furnished
680GFAHX-*3 (6)	375	Opp	102				Furnished	660GSAHX-*3 (8)	224	Opp	187				Furnished
680GQAHX-*3 (7)	295	Opp	142				Furnished								
680GSAHX-*3 (8)	214	Opp	195				Furnished								
823GBAHX-*3 (9)	500	Opp	69				Furnished								
823GDAHX-*3 (10)	500	Opp	82				Furnished								
823GGAHX-*3 (11)	470	Opp	89				Furnished								
823GJAHX-*3 (12)	325	Opp	105				Furnished								
823GMAHX-*3 (13)	340	Opp	123				Furnished								
823GRAHX-*3 (14)	246	Opp	170				Furnished								
823GTKTX-*3 (15)	194	Opp	206		8-A-165 (16)		Furnished								
880GBAHX-*3 (17)	500	Opp	69				Furnished								
880GDAHX-*3 (18)	500	Opp	82				Furnished								
880GGAHX-*3 (19)	470	Opp	89				Furnished								
880GJAHX-*3 (20)	399	Opp	105				Furnished								
880GMAHX-*3 (21)	340	Opp	123				Furnished								
880GQAHX-*3 (22)	290	Opp	144				Furnished								
880GRAHX-*3 (23)	246	Opp	170				Furnished								
880GTAHX-*3 (24)	191	Opp	219				Furnished								

Continued Next Page

CAUTION: Eaton Transmission Division has established a MAXIMUM torque limit for the Transmission P.T.O. driver gear. For all FR, FRO & FRLO transmissions the MAXIMUM torque limit for the transmission P.T.O. driver gear is 500 Ft-lbs [678 N.m]. All torque limits on this application page reflect the 500 Ft-lbs [678 N.m] limit at the Transmission P.T.O. driver gear. Refer to the Chelsea P.T.O. Torque Limit Chart in the front section of this catalog for complete torque limit information.

CAUTION: Do not use geared adapters with 442 "A" and "C" ratios.

CAUTION: 660/680 Series: Applications above 1500 RPM output shaft speed, contact Chelsea Technical Service for approval.

NOTE: The 8000-14X and 8000-15X kits have metric fasteners. If the 6 or 8 bolt plate is ordered with the "G" designator the metric stud kit comes with the plate. Ex. 328481G, 328564G.

NOTE: The 442 "U","W" and "X" ratios will not mount on the right side and the 489 "X" ratio will not mount on the bottom opening because the O.D. of the ratio gear hits the O.D. of the adjacent gear in the transmission.

NOTE: If Ordering the 230/231 Series with the Shaft Brake Option, order the "BA" Output for Automatic Transmissions and the "BD" Output for Manual Transmissions.

(1) Input Gear Part No. 5-P-1280
(2) Input Gear Part No. 5-P-1287
(3) Input Gear Part No. 5-P-1077
(4) Input Gear Part No. 5-P-1364
(5) Input Gear Part No. 5-P-1004
(6) Input Gear Part No. 5-P-1242
(7) Input Gear Part No. 5-P-1246
(8) Input Gear Part No. 5-P-1322
(9) Input Gear Part No. 5-P-285
(10) Input Gear Part No. 5-P-971
(11) Input Gear Part No. 5-P-980
(12) Input Gear Part No. 5-P-325
(13) Input Gear Part No. 5-P-283
(14) Input Gear Part No. 5-P-721
(15) Input Gear Part No. 5-P-1395
(16) Filler block furnished with P.T.O.
(17) Input Gear Part No. 5-P-1100
(18) Input Gear Part No. 5-P-1101
(19) Input Gear Part No. 5-P-1135
(20) Input Gear Part No. 5-P-1102
(21) Input Gear Part No. 5-P-1103
(22) Input Gear Part No. 5-P-1385
(23) Input Gear Part No. 5-P-1104
(24) Input Gear Part No. 5-P-1105

January 2008

Parker Hannifin Corporation
Chelsea Products Division
Olive Branch, MS 38654 USA

FRO-11210C	FRO-16210C
FRO-12210C	FRO-16210R
FRO-13210C	FRO-17210C
FRO-14210C	FRO-18210C
FRO-15210C	

BOTTOM SIDE ONLY

TRANSMISSION GEAR DATA:
BOT 8-Bolt Opening Gear FORWARD of Centerline
47 Teeth - SPUR

PITCH LINE TO APERTURE FACE:
.8050" (20.4470MM)

RIGHT SIDE ONLY

TRANSMISSION GEAR DATA:
R.H. 6-Bolt Opening Gear FORWARD of Centerline
45 Teeth - SPUR

PITCH LINE TO APERTURE FACE:
1.0850" (27.5600MM)

Caution: Application Approval Required for P.T.O. Output Shaft Speeds Above 2500 R.P.M.

BOTTOM Side P.T.O. Model	Inter. Torq.	Dir. Rot.	Engine % Hi	Engine % Rev	Filler Block	Adapter Assy.	Stud Kit	RIGHT Side P.T.O. Model	Inter. Torq.	Dir. Rot.	Engine % Hi	Engine % Rev	Filler Block	Adapter Assy.	Stud Kit
ONE SPEED - TWO GEAR - POWERSHIFT (AIR)															
230XAAJX-*3	250	Opp	54			328481G	Furnished	230GAAJX-*3	250	Opp	51				Furnished
230XBAJX-*3	250	Opp	70			328481G	Furnished	230GBAJX-*3	250	Opp	67				Furnished
230XDAJX-*3	250	Opp	80			328481G	Furnished	230GDAJX-*3	250	Opp	77				Furnished
230XKAJX-*3	250	Opp	109			328481G	Furnished	230GKAJX-*3	250	Opp	104				Furnished
230XQAJX-*3	250	Opp	145			328481G	Furnished	230GQAJX-*3	250	Opp	139				Furnished
230XUAJX-*3	180	Opp	232			328481G	Furnished	230GUAJX-*3	188	Opp	222				Furnished
236ZDAHX-*3 (5)	250	Opp	107			328564G	Furnished	236GDAHX-*3 (5)	250	Opp	102				Furnished
236ZKAHX-*3 (5)	250	Opp	136			328564G	Furnished	236GKAHX-*3 (5)	250	Opp	130				Furnished
236ZQAHX-*3 (5)	250	Opp	184			328564G	Furnished								
885GBAHX-*3 (17)	500	Opp	69				Furnished								
885GGAHX-*3 (19)	470	Opp	89				Furnished								
885GJAHX-*3 (20)	399	Opp	105				Furnished								
885GMAHX-*3 (21)	340	Opp	123				Furnished								
ONE SPEED - FORWARD & REVERSE															
340SFAHX-*5 (25)	200	Opp	89	93	7-A-032 7-A-140 (16)	310778G	Furnished	340GFAHX-*5 (25)	200	Opp	85	89	7-A-140 (16)		Furnished
352ZSAHX-*3 (5)	140	Opp	198	256		328564G	Furnished	352GSAHX-*3 (5)	140	Opp	189	245			Furnished
863GBAHX-*5	500	Opp	69	86			Furnished								
ONE SPEED - DUAL SHAFT															
452ZSAHX-*3 (5)	140	Opp	198			328564G	Furnished	452GSAHX-*3 (5)	140	Opp	189				Furnished
GEARED ADAPTERS															
628GAHX-3AH							Furnished	626GAHX-3AH							Furnished
								630GAHX-3AH							Furnished
								645GAHX-3AH							Furnished

Continued Next Page

CAUTION: Eaton Transmission Division has established a MAXIMUM torque limit for the Transmission P.T.O. driver gear. For all FR, FRO & FRLO transmissions the MAXIMUM torque limit for the transmission P.T.O. driver gear is 500 Ft-lbs [678 N.m]. All torque limits on this application page reflect the 500 Ft-lbs [678 N.m] limit at the Transmission P.T.O. driver gear. Refer to the Chelsea P.T.O. Torque Limit Chart in the front section of this catalog for complete torque limit information.

CAUTION: Do not use geared adapters with 442 "A" and "C" ratios.

CAUTION: 660/680 Series: Applications above 1500 RPM output shaft speed, contact Chelsea Technical Service for approval.

NOTE: The 8000-14X and 8000-15X kits have metric fasteners. If the 6 or 8 bolt plate is ordered with the "G" designator the metric stud kit comes with the plate. Ex. 328481G, 328564G.

NOTE: The 442 "U","W" and "X" ratios will not mount on the right side and the 489 "X" ratio will not mount on the bottom opening because the O.D. of the ratio gear hits the O.D. of the adjacent gear in the transmission.

NOTE: If Ordering the 230/231 Series with the Shaft Brake Option, order the "BA" Output for Automatic Transmissions and the "BD" Output for Manual Transmissions.

(5) Input Gear Part No. 5-P-1004
(16) Filler block furnished with P.T.O.
(17) Input Gear Part No. 5-P-1100
(19) Input Gear Part No. 5-P-1135
(20) Input Gear Part No. 5-P-1102
(21) Input Gear Part No. 5-P-1103
(25) Input Gear Part No. 5-P-581

FRO-11210C	FRO-16210C
FRO-12210C	FRO-16210R
FRO-13210C	FRO-17210C
FRO-14210C	FRO-18210C
FRO-15210C	

REAR SIDE ONLY | **RIGHT SIDE ONLY**

TRANSMISSION GEAR DATA:

REAR 0-Bolt Opening Gear NON-STANDARD of Centerline

0 Teeth - SPUR

PITCH LINE TO APERTURE FACE:

0" (0MM)

Caution: Application Approval Required for P.T.O. Output Shaft Speeds Above 2500 R.P.M.

REAR MOUNT & THRUSHAFT

REAR Side P.T.O. Model	Inter. Torq.	Dir. Rot.	Engine % Hi	Engine % Rev	Filler Block	Adapter Assy.	Stud Kit	RIGHT Side P.T.O. Model	Inter. Torq.	Dir. Rot.	Engine % Hi	Engine % Rev	Filler Block	Adapter Assy.	Stud Kit
541-LBJ-Y-XV	400	Eng	81				Furnished								
541-MBJ-Y-XV	350	Eng	113				Furnished								
541-NBJ-Y-XV	300	Eng	129				Furnished								

CAUTION: Eaton Transmission Division has established a MAXIMUM torque limit for the Transmission P.T.O. driver gear. For all FR, FRO & FRLO transmissions the MAXIMUM torque limit for the transmission P.T.O. driver gear is 500 Ft-lbs [678 N.m]. All torque limits on this application page reflect the 500 Ft-lbs [678 N.m] limit at the Transmission P.T.O. driver gear. Refer to the Chelsea P.T.O. Torque Limit Chart in the front section of this catalog for complete torque limit information.

CAUTION: Do not use geared adapters with 442 "A" and "C" ratios.

CAUTION: 660/680 Series: Applications above 1500 RPM output shaft speed, contact Chelsea Technical Service for approval.

NOTE: The 8000-14X and 8000-15X kits have metric fasteners. If the 6 or 8 bolt plate is ordered with the "G" designator the metric stud kit comes with the plate. Ex. 328481G, 328564G.

NOTE: The 442 "U","W" and "X" ratios will not mount on the right side and the 489 "X" ratio will not mount on the bottom opening because the O.D. of the ratio gear hits the O.D. of the adjacent gear in the transmission.

NOTE: If Ordering the 230/231 Series with the Shaft Brake Option, order the "BA" Output for Automatic Transmissions and the "BD" Output for Manual Transmissions.

Parker Hannifin Corporation
Chelsea Products Division
Olive Branch, MS 38654 USA

FR-11210B	FR-9210
FR-12210B	
FR-13210B	
FR-14210B	
FR-15210B	

BOTTOM SIDE ONLY

TRANSMISSION GEAR DATA:
BOT 8-Bolt Opening Gear FORWARD of Centerline
47 Teeth - SPUR

PITCH LINE TO APERTURE FACE:
.8050" (20.4470MM)

RIGHT SIDE ONLY

TRANSMISSION GEAR DATA:
R.H. 6-Bolt Opening Gear FORWARD of Centerline
45 Teeth - SPUR

PITCH LINE TO APERTURE FACE:
1.0850" (27.5600MM)

Caution: Application Approval Required for P.T.O. Output Shaft Speeds Above 2500 R.P.M.

BOTTOM Side P.T.O. Model	Inter. Torq.	Dir. Rot.	Engine % Hi	Engine % Rev	Filler Block	Adapter Assy.	Stud Kit	RIGHT Side P.T.O. Model	Inter. Torq.	Dir. Rot.	Engine % Hi	Engine % Rev	Filler Block	Adapter Assy.	Stud Kit
ONE SPEED - SINGLE GEAR - MECHANICAL SHIFT															
100XRAHX-*3 (1)	125	Eng	127			328481G	Furnished								
812GKAHX-*3	400	Eng	85				Furnished								
ONE SPEED - TWO GEAR - MECHANICAL SHIFT															
221ZCAHX-*3	250	Opp	57		7-A-032 (2)	328564G	Furnished	442GAAHX-*3 (3)	250	Opp	48				Furnished
221ZEAHX-*3	250	Opp	65			328564G	Furnished	442GCAHX-*3 (4)	250	Opp	61				Furnished
221ZLAHX-*3	200	Opp	88			328564G	Furnished	442GFAHX-*3 (5)	250	Opp	75				Furnished
221ZPAHX-*3	200	Opp	106			328564G	Furnished	442GHAHX-*3 (6)	250	Opp	87				Furnished
489GFAHX-*3 (5)	250	Opp	79				Furnished	442GLAHX-*3 (7)	250	Opp	97				Furnished
489GHAHX-*3 (6)	250	Opp	92				Furnished	442GQAHX-*3 (7)	225	Opp	105				Furnished
489GLAHX-*3 (7)	250	Opp	102				Furnished	442GRAHX-*3 (7)	225	Opp	121				Furnished
489GQAHX-*3 (7)	225	Opp	110				Furnished	442GSAHX-*3 (7)	200	Opp	145				Furnished
489GRAHX-*3 (7)	225	Opp	127				Furnished	442GUAHX-*3 (7)	195	Opp	171				Furnished
489GSAHX-*3 (7)	200	Opp	151				Furnished	442GWAHX-*3 (7)	175	Opp	208				Furnished
489GUAHX-*3 (7)	180	Opp	180				Furnished	442GXAHX-*3 (7)	140	Opp	242				Furnished
489GWAHX-*3 (7)	153	Opp	212				Furnished	660GFAHX-*3 (8)	375	Opp	75				Furnished
680GFAHX-*3 (8)	375	Opp	79				Furnished	660GQAHX-*3 (9)	308	Opp	105				Furnished
680GQAHX-*3 (9)	295	Opp	110				Furnished	660GSAHX-*3 (10)	224	Opp	145				Furnished
680GSAHX-*3 (10)	214	Opp	151				Furnished								
823GBAHX-*3 (11)	500	Opp	53				Furnished								
823GDAHX-*3 (12)	500	Opp	63				Furnished								
823GGAHX-*3 (13)	470	Opp	69				Furnished								
823GJAHX-*3 (14)	399	Opp	81				Furnished								
823GMAHX-*3 (15)	340	Opp	95				Furnished								
823GRAHX-*3 (16)	246	Opp	131				Furnished								
823GTKTX-*3 (17)	194	Opp	159		8-A-165 (2)		Furnished								
880GBAHX-*3 (18)	500	Opp	54				Furnished								
880GDAHX-*3 (19)	500	Opp	63				Furnished								
880GGAHX-*3 (20)	470	Opp	69				Furnished								
880GJAHX-*3 (21)	399	Opp	81				Furnished								
880GMAHX-*3 (22)	340	Opp	95				Furnished								

Continued Next Page

CAUTION: Eaton Transmission Division has established a MAXIMUM torque limit for the Transmission P.T.O. driver gear. For all FR, FRO & FRLO transmissions the MAXIMUM torque limit for the transmission P.T.O. driver gear is 500 Ft-lbs [678 N.m]. All torque limits on this application page reflect the 500 Ft-lbs [678 N.m] limit at the Transmission P.T.O. driver gear. Refer to the Chelsea P.T.O. Torque Limit Chart in the front section of this catalog for complete torque limit information.

CAUTION: Do not use geared adapters with 442 "A" and "C" ratios.

CAUTION: 660/680 Series: Applications above 1500 RPM output shaft speed, contact Chelsea Technical Service for approval.

NOTE: The new Fuller C2000 Series transmissions have M10-1.5 threads for the 6 bolt opening and M12-1.75 threads for the 8 bolt opening.

NOTE: Use constant mesh P.T.O.s only on the right side application.

NOTE: If Ordering the 230/231 Series with the Shaft Brake Option, order the "BA" Output for Automatic Transmissions and the "BD" Output for Manual Transmissions.

(1) Gear and Shaft Kit No. KXA-2-P-565
(2) Filler block furnished with P.T.O.
(3) Input Gear Part No. 5-P-1280
(4) Input Gear Part No. 5-P-1287
(5) Input Gear Part No. 5-P-1077
(6) Input Gear Part No. 5-P-1364
(7) Input Gear Part No. 5-P-1004
(8) Input Gear Part No. 5-P-1242
(9) Input Gear Part No. 5-P-1246
(10) Input Gear Part No. 5-P-1322
(11) Input Gear Part No. 5-P-285
(12) Input Gear Part No. 5-P-971
(13) Input Gear Part No. 5-P-980
(14) Input Gear Part No. 5-P-325
(15) Input Gear Part No. 5-P-283
(16) Input Gear Part No. 5-P-721
(17) Input Gear Part No. 5-P-1395
(18) Input Gear Part No. 5-P-1100
(19) Input Gear Part No. 5-P-1101
(20) Input Gear Part No. 5-P-1135
(21) Input Gear Part No. 5-P-1102
(22) Input Gear Part No. 5-P-1103

FR-11210B	FR-9210
FR-12210B	
FR-13210B	
FR-14210B	
FR-15210B	

BOTTOM SIDE ONLY

TRANSMISSION GEAR DATA:
BOT 8-Bolt Opening Gear FORWARD of Centerline
47 Teeth - SPUR
PITCH LINE TO APERTURE FACE:
.8050" (20.4470MM)

RIGHT SIDE ONLY

TRANSMISSION GEAR DATA:
R.H. 6-Bolt Opening Gear FORWARD of Centerline
45 Teeth - SPUR
PITCH LINE TO APERTURE FACE:
1.0850" (27.5600MM)

Caution: Application Approval Required for P.T.O. Output Shaft Speeds Above 2500 R.P.M.

BOTTOM Side P.T.O. Model	Inter. Torq.	Dir. Rot.	Engine % Hi	Engine % Rev	Filler Block	Adapter Assy.	Stud Kit	RIGHT Side P.T.O. Model	Inter. Torq.	Dir. Rot.	Engine % Hi	Engine % Rev	Filler Block	Adapter Assy.	Stud Kit
ONE SPEED - TWO GEAR - MECHANICAL SHIFT															
880GQAHX-*3 (23)	290	Opp	111				Furnished								
880GRAHX-*3 (24)	246	Opp	131				Furnished								
880GTAHX-*3 (25)	191	Opp	169				Furnished								
ONE SPEED - TWO GEAR - POWERSHIFT (AIR)															
230XAAJX-*3	250	Opp	41			328481G	Furnished	230GAAJX-*3	250	Opp	40				Furnished
230XBAJX-*3	250	Opp	54			328481G	Furnished	230GBAJX-*3	250	Opp	51				Furnished
230XDAJX-*3	250	Opp	62			328481G	Furnished	230GDAJX-*3	250	Opp	60				Furnished
230XKAJX-*3	250	Opp	84			328481G	Furnished	230GKAJX-*3	250	Opp	81				Furnished
230XQAJX-*3	250	Opp	112			328481G	Furnished	230GQAJX-*3	250	Opp	107				Furnished
230XUAJX-*3	180	Opp	179			328481G	Furnished	230GUAJX-*3	188	Opp	172				Furnished
885GBAHX-*3 (18)	500	Opp	54				Furnished	236GDAHX-*3 (7)	250	Opp	79				Furnished
885GGAHX-*3 (20)	470	Opp	69				Furnished	236GKAHX-*3 (7)	250	Opp	101				Furnished
885GJAHX-*3 (21)	399	Opp	81				Furnished								
885GMAHX-*3 (22)	340	Opp	95				Furnished								
ONE SPEED - FORWARD & REVERSE															
340SFAHX-*5 (26)	200	Opp	69	72	7-A-032 7-A-140 (27)	310778G	Furnished	340GFAHX-*5 (26)	200	Opp	66	69	7-A-140 (2)		Furnished
352ZSAHX-*3 (7)	140	Opp	153	198		328564G	Furnished	352GSAHX-*3 (7)	140	Opp	146	190			Furnished
863GBAHX-*5	500	Opp	54	66			Furnished								
ONE SPEED - DUAL SHAFT															
452ZSAHX-*3 (7)	140	Opp	153			328564G	Furnished	452GSAHX-*3 (7)	140	Opp	146				Furnished
GEARED ADAPTERS															
628GAHX-3AH							Furnished	626GAHX-3AH							Furnished
								630GAHX-3AH							Furnished
								645GAHX-3AH							Furnished

Continued Next Page

CAUTION: Eaton Transmission Division has established a MAXIMUM torque limit for the Transmission P.T.O. driver gear. For all FR, FRO & FRLO transmissions the MAXIMUM torque limit for the transmission P.T.O. driver gear is 500 Ft-lbs [678 N.m]. All torque limits on this application page reflect the 500 Ft-lbs [678 N.m] limit at the Transmission P.T.O. driver gear. Refer to the Chelsea P.T.O. Torque Limit Chart in the front section of this catalog for complete torque limit information.

CAUTION: Do not use geared adapters with 442 "A" and "C" ratios.

CAUTION: 660/680 Series: Applications above 1500 RPM output shaft speed, contact Chelsea Technical Service for approval.

NOTE: The new Fuller C2000 Series transmissions have M10-1.5 threads for the 6 bolt opening and M12-1.75 threads for the 8 bolt opening.

NOTE: Use constant mesh P.T.O.s only on the right side application.

NOTE: If Ordering the 230/231 Series with the Shaft Brake Option, order the "BA" Output for Automatic Transmissions and the "BD" Output for Manual Transmissions.

(2) Filler block furnished with P.T.O.
(7) Input Gear Part No. 5-P-1004
(18) Input Gear Part No. 5-P-1100
(20) Input Gear Part No. 5-P-1135
(21) Input Gear Part No. 5-P-1102
(22) Input Gear Part No. 5-P-1103
(23) Input Gear Part No. 5-P-1385
(24) Input Gear Part No. 5-P-1104
(25) Input Gear Part No. 5-P-1105
(26) Input Gear Part No. 5-P-581
(27) Filler block furnished with P.T.O. but not required

January 2008

Parker Hannifin Corporation
Chelsea Products Division
Olive Branch, MS 38654 USA

FR-11210B	FR-9210
FR-12210B	
FR-13210B	
FR-14210B	
FR-15210B	

REAR SIDE ONLY | **RIGHT SIDE ONLY**

TRANSMISSION GEAR DATA:

REAR 0-Bolt Opening Gear NON-STANDARD of Centerline

0 Teeth - SPUR

PITCH LINE TO APERTURE FACE:

0" (0MM)

Caution: Application Approval Required for P.T.O. Output Shaft Speeds Above 2500 R.P.M.

REAR Side P.T.O. Model	Inter. Torq.	Dir. Rot.	Engine % Hi	Engine % Rev	Filler Block	Adapter Assy.	Stud Kit	RIGHT Side P.T.O. Model	Inter. Torq.	Dir. Rot.	Engine % Hi	Engine % Rev	Filler Block	Adapter Assy.	Stud Kit

REAR MOUNT & THRUSHAFT

541 NBJ-Y-XV (28)	300	Eng	92			Furnished
541-LBJ-Y-XV (29)	400	Eng	63			Furnished
541-MBJ-Y-XV (30)	350	Eng	81			Furnished

CAUTION: Eaton Transmission Division has established a MAXIMUM torque limit for the Transmission P.T.O. driver gear. For all FR, FRO & FRLO transmissions the MAXIMUM torque limit for the transmission P.T.O. driver gear is 500 Ft-lbs [678 N.m]. All torque limits on this application page reflect the 500 Ft-lbs [678 N.m] limit at the Transmission P.T.O. driver gear. Refer to the Chelsea P.T.O. Torque Limit Chart in the front section of this catalog for complete torque limit information.

CAUTION: Do not use geared adapters with 442 "A" and "C" ratios.

CAUTION: 660/680 Series: Applications above 1500 RPM output shaft speed, contact Chelsea Technical Service for approval.

NOTE: The new Fuller C2000 Series transmissions have M10-1.5 threads for the 6 bolt opening and M12-1.75 threads for the 8 bolt opening.

NOTE: Use constant mesh P.T.O.s only on the right side application.

NOTE: If Ordering the 230/231 Series with the Shaft Brake Option, order the "BA" Output for Automatic Transmissions and the "BD" Output for Manual Transmissions.

(28) Input Gear Part No. 5-P-716
(29) Input Gear Part No. 5-P-718
(30) Input Gear Part No. 5-P-717

FRO-11210B FRO-16210B
FRO-12210B
FRO-13210B
FRO-14210B
FRO-15210B

BOTTOM SIDE ONLY

TRANSMISSION GEAR DATA:
BOT 8-Bolt Opening Gear FORWARD of Centerline
47 Teeth - SPUR

PITCH LINE TO APERTURE FACE:
.8050" (20.4470MM)

RIGHT SIDE ONLY

TRANSMISSION GEAR DATA:
R.H. 6-Bolt Opening Gear FORWARD of Centerline
45 Teeth - SPUR

PITCH LINE TO APERTURE FACE:
1.0850" (27.5590MM)

Caution: Application Approval Required for P.T.O. Output Shaft Speeds Above 2500 R.P.M.

BOTTOM Side P.T.O. Model	Inter. Torq.	Dir. Rot.	Engine % Hi	Engine % Rev	Filler Block	Adapter Assy.	Stud Kit	RIGHT Side P.T.O. Model	Inter. Torq.	Dir. Rot.	Engine % Hi	Engine % Rev	Filler Block	Adapter Assy.	Stud Kit
ONE SPEED - SINGLE GEAR - MECHANICAL SHIFT															
100XRAHX-*3 (1)	125	Eng	170			328481G	8000-14X								
812GKAHX-*3	382	Eng	113				Furnished								
823GBAHX-*3 (2)	500	Opp	71				Furnished								
ONE SPEED - TWO GEAR - MECHANICAL SHIFT															
221ZCAHX-*3	250	Opp	76		7-A-032 (3)	328564G	Furnished	442GAAHX-*3 (4)	250	Opp	64				Furnished
221ZEAHX-*3	250	Opp	87			328564G	Furnished	442GCAHX-*3 (5)	250	Opp	81				Furnished
221ZLAHX-*3	200	Opp	117			328564G	Furnished	442GFAHX-*3 (6)	250	Opp	101				Furnished
221ZPAHX-*3	200	Opp	142			328564G	Furnished	442GHAHX-*3 (7)	250	Opp	117				Furnished
489GAAHX-*3 (4)	250	Opp	66				Furnished	442GLAHX-*3 (8)	250	Opp	130				Furnished
489GCAHX-*3 (5)	250	Opp	85				Furnished	442GQAHX-*3 (8)	225	Opp	140				Furnished
489GFAHX-*3 (6)	250	Opp	105				Furnished	442GRAHX-*3 (8)	225	Opp	162				Furnished
489GHAHX-*3 (7)	250	Opp	122				Furnished	442GSAHX-*3 (8)	200	Opp	193				Furnished
489GLAHX-*3 (8)	250	Opp	136				Furnished	660GFAHX-*3 (9)	375	Opp	101				Furnished
489GQAHX-*3 (8)	225	Opp	146				Furnished	660GQAHX-*3 (10)	308	Opp	140				Furnished
489GRAHX-*3 (8)	225	Opp	170				Furnished	660GSAHX-*3 (11)	224	Opp	193				Furnished
489GSAHX-*3 (8)	200	Opp	202				Furnished								
489GUAHX-*3 (8)	180	Opp	241				Furnished								
489GWAHX-*3 (8)	153	Opp	283				Furnished								
680GFAHX-*3 (9)	375	Opp	105				Furnished								
680GQAHX-*3 (10)	295	Opp	146				Furnished								
680GSAHX-*3 (11)	214	Opp	202				Furnished								
823GDAHX-*3 (12)	500	Opp	85				Furnished								
823GGAHX-*3 (13)	470	Opp					Furnished								
823GJAHX-*3 (14)	399	Opp	108				Furnished								
823GMAHX-*3 (15)	340	Opp	127				Furnished								
823GRAHX-*3 (16)	246	Opp	176				Furnished								
823GTKTX-*3 (17)	194	Opp	213		8-A-165 (18)		Furnished								
880GBAHX-*3 (19)	500	Opp	72				Furnished								
880GDAHX-*3 (20)	500	Opp	85				Furnished								
880GGAHX-*3 (21)	470	Opp	92				Furnished								

Continued Next Page

CAUTION: Eaton Transmission Division has established a MAXIMUM torque limit for the Transmission P.T.O. driver gear. For all FR, FRO & FRLO transmissions the MAXIMUM torque limit for the transmission P.T.O. driver gear is 500 Ft-lbs [678 N.m]. All torque limits on this application page reflect the 500 Ft-lbs [678 N.m] limit at the Transmission P.T.O. driver gear. Refer to the Chelsea P.T.O. Torque Limit Chart in the front section of this catalog for complete torque limit information.

CAUTION: Do not use geared adapters with 442 "A" and "C" ratios.

CAUTION: 660/680 Series: Applications above 1500 RPM output shaft speed, contact Chelsea Technical Service for approval.

NOTE: The new Fuller C2000 Series transmissions have M10-1.5 threads for the 6 bolt opening and M12-1.75 threads for the 8 bolt opening.

NOTE: Use constant mesh P.T.O.s only on the right side application.

NOTE: If Ordering the 230/231 Series with the Shaft Brake Option, order the "BA" Output for Automatic Transmissions and the "BD" Output for Manual Transmissions.

(1) Gear and Shaft Kit No. KXA-2-P-565
(2) Input Gear Part No. 5-P-285
(3) Filler block furnished with P.T.O. but not required
(4) Input Gear Part No. 5-P-1280
(5) Input Gear Part No. 5-P-1287
(6) Input Gear Part No. 5-P-1077
(7) Input Gear Part No. 5-P-1364
(8) Input Gear Part No. 5-P-1004
(9) Input Gear Part No. 5-P-1242
(10) Input Gear Part No. 5-P-1246
(11) Input Gear Part No. 5-P-1322
(12) Input Gear Part No. 5-P-971
(13) Input Gear Part No. 5-P-980
(14) Input Gear Part No. 5-P-325
(15) Input Gear Part No. 5-P-283
(16) Input Gear Part No. 5-P-721
(17) Input Gear Part No. 5-P-1395
(18) Filler block furnished with P.T.O.
(19) Input Gear Part No. 5-P-1100
(20) Input Gear Part No. 5-P-1101
(21) Input Gear Part No. 5-P-1135

FRO-11210B	FRO-16210B
FRO-12210B	
FRO-13210B	
FRO-14210B	
FRO-15210B	

BOTTOM SIDE ONLY

TRANSMISSION GEAR DATA:
BOT 8-Bolt Opening Gear FORWARD of Centerline
47 Teeth - SPUR

PITCH LINE TO APERTURE FACE:
.8050" (20.4470MM)

RIGHT SIDE ONLY

TRANSMISSION GEAR DATA:
R.H. 6-Bolt Opening Gear FORWARD of Centerline
45 Teeth - SPUR

PITCH LINE TO APERTURE FACE:
1.0850" (27.5590MM)

Caution: Application Approval Required for P.T.O. Output Shaft Speeds Above 2500 R.P.M.

BOTTOM Side P.T.O. Model	Inter. Torq.	Dir. Rot.	Engine % Hi	Engine % Rev	Filler Block	Adapter Assy.	Stud Kit	RIGHT Side P.T.O. Model	Inter. Torq.	Dir. Rot.	Engine % Hi	Engine % Rev	Filler Block	Adapter Assy.	Stud Kit
ONE SPEED - TWO GEAR - MECHANICAL SHIFT															
880GJAHX-*3 (22)	399	Opp	108				Furnished								
880GMAHX-*3 (23)	340	Opp	127				Furnished								
880GQAHX-*3 (24)	290	Opp	149				Furnished								
880GRAHX-*3 (25)	246	Opp	176				Furnished								
880GTAHX-*3 (26)	191	Opp	226				Furnished								
ONE SPEED - TWO GEAR - POWERSHIFT (AIR)															
230XAAJX-*3	250	Opp	55			328481G	Furnished	230GAAJX-*3	250	Opp	53				Furnished
230XBAJX-*3	250	Opp	72			328481G	Furnished	230GBAJX-*3	250	Opp	69				Furnished
230XDAJX-*3	250	Opp	83			328481G	Furnished	230GDAJX-*3	250	Opp	80				Furnished
230XKAJX-*3	250	Opp	112			328481G	Furnished	230GKAJX-*3	250	Opp	108				Furnished
230XQAJX-*3	250	Opp	150			328481G	Furnished	230GQAJX-*3	250	Opp	143				Furnished
230XUAJX-*3	188	Opp	239			328481G	Furnished	230GUAJX-*3	188	Opp	229				Furnished
885GBAHX-*3 (19)	500	Opp	72				Furnished	236GDAHX-*3 (8)	250	Opp	105				Furnished
885GGAHX-*3 (21)	470	Opp	92				Furnished	236GKAHX-*3 (8)	250	Opp	135				Furnished
885GJAHX-*3 (22)	399	Opp	108				Furnished								
885GMAHX-*3 (23)	340	Opp	127				Furnished								
ONE SPEED - FORWARD & REVERSE															
340SFAHX-*5 (27)	200	Opp	92	96	7-A-140 (3)	310778G	Furnished	340GFAHX-*5 (27)	200	Opp	88	92	7-A-140 (3)		Furnished
352ZSAHX-*3 (8)	140	Opp	204	265		328564G	Furnished	352GSAHX-*3 (8)	140	Opp	196	253			Furnished
863GBAHX-*5	500	Opp	72	89			Furnished								
ONE SPEED - DUAL SHAFT															
452ZSAHX-*3 (8)	140	Opp	204			328564G	Furnished	452GSAHX-*3 (8)	140	Opp	196				Furnished
GEARED ADAPTERS															
628GAHX-3AH							Furnished	626GAHX-3AH							Furnished
								630GAHX-3AH							Furnished
								645GAHX-3AH							Furnished

Continued Next Page

CAUTION: Eaton Transmission Division has established a MAXIMUM torque limit for the Transmission P.T.O. driver gear. For all FR, FRO & FRLO transmissions the MAXIMUM torque limit for the transmission P.T.O. driver gear is 500 Ft-lbs [678 N.m]. All torque limits on this application page reflect the 500 Ft-lbs [678 N.m] limit at the Transmission P.T.O. driver gear. Refer to the Chelsea P.T.O. Torque Limit Chart in the front section of this catalog for complete torque limit information.

CAUTION: Do not use geared adapters with 442 "A" and "C" ratios.

CAUTION: 660/680 Series: Applications above 1500 RPM output shaft speed, contact Chelsea Technical Service for approval.

NOTE: The new Fuller C2000 Series transmissions have M10-1.5 threads for the 6 bolt opening and M12-1.75 threads for the 8 bolt opening.

NOTE: Use constant mesh P.T.O.s only on the right side application.

NOTE: If Ordering the 230/231 Series with the Shaft Brake Option, order the "BA" Output for Automatic Transmissions and the "BD" Output for Manual Transmissions.

(3) Filler block furnished with P.T.O. but not required
(8) Input Gear Part No. 5-P-1004
(19) Input Gear Part No. 5-P-1100
(21) Input Gear Part No. 5-P-1135
(22) Input Gear Part No. 5-P-1102
(23) Input Gear Part No. 5-P-1103
(24) Input Gear Part No. 5-P-1385
(25) Input Gear Part No. 5-P-1104
(26) Input Gear Part No. 5-P-1105
(27) Input Gear Part No. 5-P-581

FRO-11210B	FRO-16210B
FRO-12210B	
FRO-13210B	
FRO-14210B	
FRO-15210B	

REAR SIDE ONLY

TRANSMISSION GEAR DATA:

REAR 0-Bolt Opening Gear NON-STANDARD of Centerline

0 Teeth - SPUR

PITCH LINE TO APERTURE FACE:

0" (0MM)

Caution: Application Approval Required for P.T.O. Output Shaft Speeds Above 2500 R.P.M.

REAR Side P.T.O. Model	Inter. Torq.	Dir. Rot.	Engine % Hi	Engine % Rev	Filler Block	Adapter Assy.	Stud Kit	P.T.O. Model	Inter. Torq.	Dir. Rot.	Engine % Hi	Engine % Rev	Filler Block	Adapter Assy.	Stud Kit

REAR MOUNT & THRUSHAFT

541-LBJ-Y-XV (28)	400	Eng	84			Furnished
541-MBJ-Y-XV (29)	350	Eng	108			Furnished
541-NBJ-Y-XV (30)	300	Eng	123			Furnished

CAUTION: Eaton Transmission Division has established a MAXIMUM torque limit for the Transmission P.T.O. driver gear. For all FR, FRO & FRLO transmissions the MAXIMUM torque limit for the transmission P.T.O. driver gear is 500 Ft-lbs [678 N.m]. All torque limits on this application page reflect the 500 Ft-lbs [678 N.m] limit at the Transmission P.T.O. driver gear. Refer to the Chelsea P.T.O. Torque Limit Chart in the front section of this catalog for complete torque limit information.

CAUTION: Do not use geared adapters with 442 "A" and "C" ratios.

CAUTION: 660/680 Series: Applications above 1500 RPM output shaft speed, contact Chelsea Technical Service for approval.

NOTE: The new Fuller C2000 Series transmissions have M10-1.5 threads for the 6 bolt opening and M12-1.75 threads for the 8 bolt opening.

NOTE: Use constant mesh P.T.O.s only on the right side application.

NOTE: If Ordering the 230/231 Series with the Shaft Brake Option, order the "BA" Output for Automatic Transmissions and the "BD" Output for Manual Transmissions.

(28) Input Gear Part No. 5-P-718
(29) Input Gear Part No. 5-P-717
(30) Input Gear Part No. 5-P-716

EH8-E306A-UP	FO-6406A-AW3	FSO-6406A
F-5405B-DM3	FO-6406B-DM3	FSO-8406A
FO-5406B-DM3	FO-8406A-ASW	
FO-6406A-ASW	FO-8406A-ASX	
FO-6406A-ASX	FO-8406A-AW3	

LEFT SIDE ONLY

TRANSMISSION GEAR DATA:
L.H. 6-Bolt Opening Gear FORWARD of Centerline
48 Teeth - R.H. HELIX

PITCH LINE TO APERTURE FACE:
.4900" (12.4460MM)

RIGHT SIDE ONLY

TRANSMISSION GEAR DATA:
R.H. 6-Bolt Opening Gear FORWARD of Centerline
48 Teeth - R.H. HELIX

PITCH LINE TO APERTURE FACE:
.4900" (12.4460MM)

Caution: Application Approval Required for P.T.O. Output Shaft Speeds Above 2500 R.P.M.

LEFT Side P.T.O. Model	Inter. Torq.	Dir. Rot.	Engine % Hi	Engine % Rev	Filler Block	Adapter Assy.	Stud Kit	RIGHT Side P.T.O. Model	Inter. Torq.	Dir. Rot.	Engine % Hi	Engine % Rev	Filler Block	Adapter Assy.	Stud Kit
ONE SPEED - TWO GEAR - MECHANICAL SHIFT															
442KLJKX-*5 (1)	250	Opp	99		7-A-500		7170-5X	442KLJKX-*3 (1)	250	Opp	99		7-A-500		7170-5X
442KQJKX-*5 (1)	225	Opp	106		7-A-500		7170-5X	442KQJKX-*3 (1)	225	Opp	106		7-A-500		7170-5X
442KRJKX-*5 (1)	225	Opp	123		7-A-500		7170-5X	442KRJKX-*3 (1)	225	Opp	123		7-A-500		7170-5X
442KSJKX-*5 (1)	200	Opp	146		7-A-500		7170-5X	442KSJKX-*3 (1)	200	Opp	146		7-A-500		7170-5X
442KUJKX-*5 (1)	195	Opp	174		7-A-500		7170-5X	442KUJKX-*3 (1)	195	Opp	174		7-A-500		7170-5X
442KWJKX-*5 (1)	175	Opp	205		7-A-500		7170-5X	442KWJKX-*3 (1)	175	Opp	205		7-A-500		7170-5X
442KXJKX-*5 (1)	140	Opp	242		7-A-500		7170-5X	442KXJKX-*3 (1)	140	Opp	242		7-A-500		7170-5X
ONE SPEED - TWO GEAR - POWERSHIFT (AIR)															
236KDJKX-*5 (1)	250	Opp	80		7-A-500		7170-5X	236KDJKX-*3 (1)	250	Opp	80		7-A-500		7170-5X
236KKJKX-*5 (1)	250	Opp	102		7-A-500		7170-5X	236KKJKX-*3 (1)	250	Opp	102		7-A-500		7170-5X
236KQJKX-*5 (1)	250	Opp	138		7-A-500		7170-5X	236KQJKX-*3 (1)	250	Opp	138		7-A-500		7170-5X
236KUJKX-*5 (1)	225	Opp	157		7-A-500		7170-5X	236KUJKX-*3 (1)	225	Opp	157		7-A-500		7170-5X
ONE SPEED - FORWARD & REVERSE															
352KSJKX-*5 (1)	140	Opp	148	192	7-A-500(T)		7170-5X	352KSJKX-*3 (1)	140	Opp	148	192	7-A-500(T)		7170-5X
GEARED ADAPTERS															
626KJKX-4JL (2)					7-A-500		7170-5X	626KJKX-3JL (2)					7-A-500		7170-5X
630KJKX-4JL (2)					7-A-500		7170-5X	630KJKX-3JL (2)					7-A-500		7170-5X
645KJKX-4JL (2)					7-A-500		7170-5X	645KJKX-3JL (2)					7-A-500		7170-5X

NOTE: The 7-A-187 spacer and 7170-3X stud kit are required to mount the 442 Series to the adapter.

NOTE: FO-8406A-ASX, FO-6406A-ASX and FO-6406A-ASW Left Side not usuable due to Inertia Brake mounted to the 6-Bolt opening.

(1) Input Gear Part No. 5-P-1261
(2) Input Gear Part No. 5-P-1262

FSB-5406B
FSB-6406B

LEFT SIDE ONLY	RIGHT SIDE ONLY
TRANSMISSION GEAR DATA: L.H. 6-Bolt Opening Gear FORWARD of Centerline 38 Teeth - R.H. HELIX **PITCH LINE TO APERTURE FACE:** 1.0850" (27.5590MM)	**TRANSMISSION GEAR DATA:** R.H. 6-Bolt Opening Gear FORWARD of Centerline 38 Teeth - R.H. HELIX **PITCH LINE TO APERTURE FACE:** 1.0850" (27.5590MM)

Caution: Application Approval Required for P.T.O. Output Shaft Speeds Above 2500 R.P.M.

LEFT Side P.T.O. Model	Inter. Torq.	Dir. Rot.	Engine % Hi	Engine % Rev	Filler Block	Adapter Assy.	Stud Kit	RIGHT Side P.T.O. Model	Inter. Torq.	Dir. Rot.	Engine % Hi	Engine % Rev	Filler Block	Adapter Assy.	Stud Kit
ONE SPEED - TWO GEAR - MECHANICAL SHIFT															
442XFESX-*5 (1)	250	Opp	53		7-A-062		Furnished	442XFESX-*3 (1)	250	Opp	53		7-A-062		Furnished
442XLESX-*5 (2)	250	Opp	69		7-A-062		Furnished	442XLESX-*3 (2)	250	Opp	69		7-A-062		Furnished
442XQESX-*5 (2)	225	Opp	74		7-A-062		Furnished	442XQESX-*3 (2)	225	Opp	74		7-A-062		Furnished
442XRESX-*5 (2)	225	Opp	85		7-A-062		Furnished	442XRESX-*3 (2)	225	Opp	85		7-A-062		Furnished
442XSESX-*5 (2)	200	Opp	102		7-A-062		Furnished	442XSESX-*3 (2)	200	Opp	102		7-A-062		Furnished
442XUESX-*5 (2)	195	Opp	121		7-A-062		Furnished	442XUESX-*3 (2)	195	Opp	121		7-A-062		Furnished
442XWESX-*5 (2)	175	Opp	143		7-A-062		Furnished	442XWESX-*3 (2)	175	Opp	143		7-A-062		Furnished
442XXESX-*5 (2)	140	Opp	169		7-A-062		Furnished	442XXESX-*3 (2)	140	Opp	169		7-A-062		Furnished
ONE SPEED - TWO GEAR - POWERSHIFT (AIR)															
236XDESX-*5 (2)	250	Opp	56		7-A-062		Furnished	236XDESX-*3 (2)	250	Opp	56		7-A-062		Furnished
236XKESX-*5 (2)	250	Opp	71		7-A-062		Furnished	236XKESX-*3 (2)	250	Opp	71		7-A-062		Furnished
236XQESX-*5 (2)	250	Opp	96		7-A-062		Furnished	236XQESX-*3 (2)	250	Opp	96		7-A-062		Furnished
236XUESX-*5 (2)	225	Opp	110		7-A-062		Furnished	236XUESX-*3 (2)	225	Opp	110		7-A-062		Furnished
ONE SPEED - FORWARD & REVERSE															
340XFESX-*5 (3)	200	Opp	48	51	7-A-093 7-A-140 (4)		328170-76X	340XFESX-*5 (3)	200	Opp	48	51	7-A-093 7-A-140 (4)		328170-76X
352XSESX-*5 (2)	140	Opp	103	133	7-A-062		Furnished	352XSESX-*3 (2)	140	Opp	103	133	7-A-062		Furnished
ONE SPEED - DUAL SHAFT															
452XSESX-*5 (2)	140	Opp	103		7-A-062		Furnished	452XSESX-*3 (2)	140	Opp	103		7-A-062		Furnished
GEARED ADAPTERS															
626XESX-4HL					7-A-062		Furnished	626XESX-3HL		Eng			7-A-062		Furnished
630XESX-4HL					7-A-062		Furnished	630XESX-3HL					7-A-062		Furnished
645XESX-4HL					7-A-062		Furnished	645XESX-3HL					7-A-062		Furnished

NOTE: 7-A-062 is required to mount the P.T.O. at standard mounting depth of 1.085" due to the transmission gear tooth thickness that is 0.065" oversize.

(1) Input Gear Part No. 5-P-1092
(2) Input Gear Part No. 5-P-1059
(3) Input Gear Part No. 5-P-884
(4) Filler block furnished with P.T.O. but not required

FRLO-14410C FRLO-16410C-T2
FRLO-14410C-T2
FRLO-15410C
FRLO-15410C-T2
FRLO-16410C

LEFT SIDE ONLY

TRANSMISSION GEAR DATA:
L.H. 6-Bolt Opening Gear FORWARD of Centerline
51 Teeth - R.H. HELIX

PITCH LINE TO APERTURE FACE:
1.0850" (27.5590MM)

RIGHT SIDE ONLY

TRANSMISSION GEAR DATA:
R.H. 6-Bolt Opening Gear FORWARD of Centerline
51 Teeth - R.H. HELIX

PITCH LINE TO APERTURE FACE:
1.0850" (27.5590MM)

Caution: Application Approval Required for P.T.O. Output Shaft Speeds Above 2500 R.P.M.

LEFT Side P.T.O. Model	Inter. Torq.	Dir. Rot.	Engine % Hi	Engine % Rev	Filler Block	Adapter Assy.	Stud Kit	RIGHT Side P.T.O. Model	Inter. Torq.	Dir. Rot.	Engine % Hi	Engine % Rev	Filler Block	Adapter Assy.	Stud Kit
ONE SPEED - TWO GEAR - MECHANICAL SHIFT															
442GAJAX*5 (1)	250	Opp	43				Furnished	442GAJAX*3 (1)	250	Opp	43				Furnished
442GCJAX-*5 (2)	250	Opp	54				Furnished	442GCJAX-*3 (2)	250	Opp	54				Furnished
442GFJAX-*5 (3)	250	Opp	67				Furnished	442GFJAX-*3 (3)	250	Opp	67				Furnished
442GHJAX-*5 (4)	250	Opp	78				Furnished	442GHJAX-*3 (4)	250	Opp	78				Furnished
442GLJAX-*5 (1)	250	Opp	87				Furnished	442GLJAX-*3 (1)	250	Opp	87				Furnished
442GQJAX-*5 (1)	225	Opp	94				Furnished	442GQJAX-*3 (1)	225	Opp	94				Furnished
442GRJAX-*5 (1)	225	Opp	109				Furnished	442GRJAX-*3 (1)	225	Opp	109				Furnished
442GSJAX-*5 (1)	200	Opp	130				Furnished	442GSJAX-*3 (1)	200	Opp	130				Furnished
442GUJAX-*5 (1)	195	Opp	155				Furnished	442GUJAX-*3 (1)	195	Opp	155				Furnished
442GWJAX-*5 (1)	175	Opp	182				Furnished	442GWJAX-*3 (1)	175	Opp	182				Furnished
442GXJAX-*5 (1)	140	Opp	215				Furnished	442GXJAX-*3 (1)	140	Opp	215				Furnished
660GFJAX-*5 (5)	375	Opp	67				Furnished	660GFJAX-*3 (5)	375	Opp	67				Furnished
660GQJAX-*5 (6)	330	Opp	94				Furnished	660GQJAX-*3 (6)	330	Opp	94				Furnished
660GSJAX-*5 (7)	240	Opp	130				Furnished	660GSJAX-*3 (7)	240	Opp	130				Furnished
ONE SPEED - TWO GEAR - POWERSHIFT (AIR)															
236GDJAX-*5 (1)	250	Opp	70				Furnished	236GKJAX-*3 (1)	250	Opp	91				Furnished
236GKJAX-*5 (1)	250	Opp	91				Furnished	236GQJAX-*3 (1)	250	Opp	122				Furnished
236GQJAX-*5 (1)	250	Opp	122				Furnished	236GUJAX-*3 (1)	225	Opp	140				Furnished
236GUJAX-*5 (1)	225	Opp	140				Furnished								
GEARED ADAPTERS															
626GJAX-4JC (8)		Eng					Furnished	626GJAX-3JC (8)		Eng					Furnished
630GJAX-4JC (8)		Eng					Furnished	630GJAX-3JC (8)		Eng					Furnished
								645GJAX-3JC (8)		Eng					Furnished

CAUTION: Eaton Transmission Division has established a MAXIMUM torque limit for the Transmission P.T.O. driver gear. For all FR, FRO & FRLO transmissions the MAXIMUM torque limit for the transmission P.T.O. driver gear is 500 Ft-lbs [678 Nm]. All torque limits on this application page reflect the 500 Ft-lbs [678 Nm] limit at the Transmission P.T.O. driver gear. Refer to the Chelsea P.T.O. Torque Limit Chart in the front section of this catalog for complete torque limit information.

CAUTION: 660/680 Series: Applications above 1500 RPM output shaft speed, contact Chelsea Technical Service for approval.

CAUTION: Do not use geared adapters with 442 "A" and "C" ratios.

NOTE: When using a 626G/630G or 645G adapter on this transmission, put 5-P-1243 gear in the adapter and the 5-P-1247 gear in the 442 Series P.T.O. 7-A-165 spacer is required between the adapter and the 442 Series. Normal backlash will need to be checked between the P.T.O. and the adapter. Use stud kit 7170-3X to mount the 442 Series to the Adapter.

(1) Input Gear Part No. 5-P-1243
(2) Input Gear Part No. 5-P-1368
(3) Input Gear Part No. 5-P-1340
(4) Input Gear Part No. 5-P-1342
(5) Input Gear Part No. 5-P-1345
(6) Input Gear Part No. 5-P-1346
(7) Input Gear Part No. 5-P-1347
(8) Input Gear Part No. 5-P-1247

January 2008

Parker Hannifin Corporation
Chelsea Products Division
Olive Branch, MS 38654 USA

F-5405-DM3	FO-6406N-AW3
F-6406N-ASW	FS-5406N
F-6406N-ASX	FS-6406N
F-6406N-AW3	
F-8406N-ASW	

LEFT SIDE ONLY

TRANSMISSION GEAR DATA:
L.H. 6-Bolt Opening Gear FORWARD of Centerline
39 Teeth - R.H. HELIX
PITCH LINE TO APERTURE FACE:
1.1460" (29.1080MM)

RIGHT SIDE ONLY

TRANSMISSION GEAR DATA:
R.H. 6-Bolt Opening Gear FORWARD of Centerline
39 Teeth - R.H. HELIX
PITCH LINE TO APERTURE FACE:
1.1460" (29.1080MM)

Caution: Application Approval Required for P.T.O. Output Shaft Speeds Above 2500 R.P.M.

LEFT Side P.T.O. Model	Inter. Torq.	Dir. Rot.	Engine % Hi	Engine % Rev	Filler Block	Adapter Assy.	Stud Kit	RIGHT Side P.T.O. Model	Inter. Torq.	Dir. Rot.	Engine % Hi	Engine % Rev	Filler Block	Adapter Assy.	Stud Kit
ONE SPEED - TWO GEAR - MECHANICAL SHIFT															
442XFJWX-*5 (1)	250	Opp	51				Furnished	442XFJWX-*3 (1)	250	Opp	51				Furnished
442XLJWX-*5 (2)	250	Opp	66				Furnished	442XLJWX-*3 (2)	250	Opp	66				Furnished
442XQJWX-*5 (2)	225	Opp	71				Furnished	442XQJWX-*3 (2)	225	Opp	71				Furnished
442XRJWX-*5 (2)	225	Opp	83				Furnished	442XRJWX-*3 (2)	225	Opp	83				Furnished
442XSJWX-*5 (2)	200	Opp	98				Furnished	442XSJWX-*3 (2)	200	Opp	98				Furnished
442XUJWX-*5 (2)	195	Opp	117				Furnished	442XUJWX-*3 (2)	195	Opp	117				Furnished
442XWJWX-*5 (2)	175	Opp	138				Furnished	442XWJWX-*3 (2)	175	Opp	138				Furnished
442XXJWX-*5 (2)	140	Opp	163				Furnished	442XXJWX-*3 (2)	140	Opp	163				Furnished
ONE SPEED - TWO GEAR - POWERSHIFT (AIR)															
236XDJWX-*5 (2)	250	Opp	53				Furnished	236XDJWX-*3 (2)	250	Opp	53				Furnished
236XKJWX-*5 (2)	250	Opp	69				Furnished	236XKJWX-*3 (2)	250	Opp	69				Furnished
236XQJWX-*5 (2)	250	Opp	93				Furnished	236XQJWX-*3 (2)	250	Opp	93				Furnished
236XUJWX-*5 (2)	225	Opp	106				Furnished	236XUJWX-*3 (2)	225	Opp	106				Furnished
ONE SPEED - FORWARD & REVERSE															
340XFJWX-*5 (3)	200	Opp	46	49			Furnished	340XFJWX-*5 (3)	200	Opp	46	49			Furnished
352XSJWX-*5 (2)	140	Opp	100	129			Furnished	352XSJWX-*3 (2)	140	Opp	100	129			Furnished
GEARED ADAPTERS															
626XJWX-4KB							Furnished	626XJWX-3KB							Furnished
630XJWX-4KB							Furnished	630XJWX-3KB							Furnished
645XJWX-4KB							Furnished	645XJWX-3KB							Furnished

NOTE: The 626 and 645 series adapters can not be used with the 442 Series "F" ratio.

NOTE: The 626/645 Series adapters can be mounted on this transmission by replacing the 5-P-1319 gear in the 442 Series with the 5-P-1321 and putting the 5-P-1319 gear in the adapter assembly. A 7-A-093 spacer is required between the adapter and the P.T.O. to get proper backlash. Use 7170-3X stud kit to mount the P.T.O. to the adapter. Use the stud kit supplied with the adapter to mount it to the transmission.

(1) Input Gear Part No. 5-P-1320
(2) Input Gear Part No. 5-P-1319
(3) Input Gear Part No. 5-P-1404

Parker Hannifin Corporation
Chelsea Products Division
Olive Branch, MS 38654 USA

RTO-10910B-DM2	RTO-14910B-DM3
RTO-10910B-DM3	RTO-16910B-DM2
RTO-12910B-DM2	RTO-16910B-DM3
RTO-12910B-DM3	
RTO-14910B-DM2	

BOTTOM SIDE ONLY

TRANSMISSION GEAR DATA:
BOT 8-Bolt Opening Gear FORWARD of Centerline
47 Teeth - SPUR

PITCH LINE TO APERTURE FACE:
.8050" (20.4500MM)

RIGHT SIDE ONLY

TRANSMISSION GEAR DATA:
R.H. 6-Bolt Opening Gear FORWARD of Centerline
45 Teeth - SPUR

PITCH LINE TO APERTURE FACE:
1.0850" (27.5600MM)

Caution: Application Approval Required for P.T.O. Output Shaft Speeds Above 2500 R.P.M.

BOTTOM Side P.T.O. Model	Inter. Torq.	Dir. Rot.	Engine % Hi	Engine % Rev	Filler Block	Adapter Assy.	Stud Kit	RIGHT Side P.T.O. Model	Inter. Torq.	Dir. Rot.	Engine % Hi	Engine % Rev	Filler Block	Adapter Assy.	Stud Kit
ONE SPEED - SINGLE GEAR - MECHANICAL SHIFT															
100XRAHX-*3 (1)	125	Eng	185			328481X	Furnished	100XRAHX-*3 (1)	125	Opp	177			329138X	Furnished
812XKAHX-*3	268	Eng	123				Furnished								
ONE SPEED - TWO GEAR - MECHANICAL SHIFT															
221ZCAHX-*3	250	Opp	82		7-A-032(P)(2)	328564X	Furnished	221XCAHX-*3	250	Opp	79		7-A-032 (2)		Furnished
221ZEAHX-*3	250	Opp	95			328564X	Furnished	221XEAHX-*3	250	Opp	91				Furnished
221ZLAHX-*3	200	Opp	128			328564X	Furnished	221XLAHX-*3	200	Opp	122				Furnished
221ZPAHX-*3	200	Opp	154			328564X	Furnished	221XPAHX-*3	200	Opp	148				Furnished
442ZAAHX-*3 (4)	250	Opp	72			328564X	Furnished	442XAAHX-*3 (4)	250	Opp	69				Furnished
442ZCAHX-*3 (5)	250	Opp	93			328564X	Furnished	442XBAHX-*3 (3)	250	Eng	69			REQUIRED	Furnished
442ZFAHX-*3 (6)	250	Opp	114			328564X	Furnished	442XCAHX-*3 (5)	250	Opp	89				Furnished
442ZHAHX-*3 (7)	250	Opp	132			328564X	Furnished	442XFAHX-*3 (6)	250	Opp	110				Furnished
442ZLAHX-*3 (8)	222	Opp	148			328564X	Furnished	442XHAHX-*3 (7)	250	Opp	127				Furnished
442ZQAHX-*3 (8)	206	Opp	160			328564X	Furnished	442XLAHX-*3 (8)	233	Opp	142				Furnished
442ZRAHX-*3 (8)	178	Opp	185			328564X	Furnished	442XQAHX-*3 (8)	216	Opp	153				Furnished
442ZSAHX-*3 (8)	150	Opp	220			328564X	Furnished	442XRAHX-*3 (8)	187	Opp	177				Furnished
442ZUAHX-*3 (8)	126	Opp	262			328564X	Furnished	442XSAHX-*3 (8)	156	Opp	211				Furnished
442ZWAHX-*3 (8)	107	Opp	308			328564X	Furnished	442XUAHX-*3 (8)	132	Opp	251				Furnished
442ZXAHX-*3 (8)	91	Opp	365			328564X	Furnished	442XWAHX-*3 (8)	112	Opp	295				Furnished
489XAAHX-*3 (4)	250	Opp	72				Furnished	442XXAHX-*3 (8)	94	Opp	349				Furnished
489XCAHX-*3 (5)	250	Opp	93				Furnished	660XFAHX-*3 (9)	301	Opp	110				Furnished
489XFAHX-*3 (6)	250	Opp	114				Furnished	660XQAHX-*3 (10)	216	Opp	153				Furnished
489XHAHX-*3 (7)	250	Opp	132				Furnished	660XSAHX-*3 (11)	156	Opp	211				Furnished
489XLAHX-*3 (8)	222	Opp	148				Furnished								
489XQAHX-*3 (8)	206	Opp	160				Furnished								
489XRAHX-*3 (8)	178	Opp	185				Furnished								
489XSAHX-*3 (8)	150	Opp	220				Furnished								
489XUAHX-*3 (8)	126	Opp	262				Furnished								
489XWAHX-*3 (8)	107	Opp	308				Furnished								
489XXAHX-*3 (8)	91	Opp	365				Furnished								
680XFAHX-*3 (9)	288	Opp	114				Furnished								

Continued Next Page

CAUTION: The Eaton UltraShift DM transmission must have an input signal from the Power Take-Off when it is active. In this active state, the clutch engagement is controlled when the operator raises the engine speed to engage the clutch and drive the transmission main box countershaft. Minimum engine/transmission speed required for PTO operation is 1000 RPM, per Eaton spec. "TRIG-2600". INCORRECT or NO P.T.O. interface signal to the transmission will result in uncontrolled engagement of the clutch during P.T.O. operation.

NOTE: Refer to Eaton Installation Guide "TRIG-2600" for proper wiring diagram showing the interface connections between the P.T.O. indicator switch and the terminal connection on the transmission.

NOTE: The Eaton Inertia Brake comes standard mounted on the bottom 8 bolt opening. If the 8 bolt opening is required for a P.T.O. the Interia Brake can be relocated to the right side 6 bolt opening. If there is any interference (frame rails, etc.) on the right side when mounting the Inertia Brake, a 630-02 adapter can be used to move the I-Brake away from the interference.

NOTE: If Ordering the 230/231 Series with the Shaft Brake Option, order the "BA" Output for Automatic Transmissions and the "BD" Output for Manual Transmissions.

NOTE: The 422XBAH Must use one of the Geared Adapters Listed on the Application Page. Direction of Rotation Shown is the Final Output Shaft Rotation w/ Geared Adapter.

(1) Gear and Shaft Kit No. KXA-2-P-565
(2) Filler block furnished with P.T.O.
(3) Input Gear Part No. 5-P-1418
(4) Input Gear Part No. 5-P-1280
(5) Input Gear Part No. 5-P-1287
(6) Input Gear Part No. 5-P-1077
(7) Input Gear Part No. 5-P-1364
(8) Input Gear Part No. 5-P-1004
(9) Input Gear Part No. 5-P-1242
(10) Input Gear Part No. 5-P-1246
(11) Input Gear Part No. 5-P-1322

January 2008

Parker Chelsea
Parker Hannifin Corporation
Chelsea Products Division
Olive Branch, MS 38654 USA

RTO-10910B-DM2	RTO-14910B-DM3
RTO-10910B-DM3	RTO-16910B-DM2
RTO-12910B-DM2	RTO-16910B-DM3
RTO-12910B-DM3	
RTO-14910B-DM2	

BOTTOM SIDE ONLY

TRANSMISSION GEAR DATA:
BOT 8-Bolt Opening Gear FORWARD of Centerline
47 Teeth - SPUR
PITCH LINE TO APERTURE FACE:
.8050" (20.4500MM)

RIGHT SIDE ONLY

TRANSMISSION GEAR DATA:
R.H. 6-Bolt Opening Gear FORWARD of Centerline
45 Teeth - SPUR
PITCH LINE TO APERTURE FACE:
1.0850" (27.5600MM)

Caution: Application Approval Required for P.T.O. Output Shaft Speeds Above 2500 R.P.M.

BOTTOM Side P.T.O. Model	Inter. Torq.	Dir. Rot.	Engine % Hi	Engine % Rev	Filler Block	Adapter Assy.	Stud Kit	RIGHT Side P.T.O. Model	Inter. Torq.	Dir. Rot.	Engine % Hi	Engine % Rev	Filler Block	Adapter Assy.	Stud Kit
ONE SPEED - TWO GEAR - MECHANICAL SHIFT															
680XQAHX-*3 (10)	206	Opp	160				Furnished								
680XSAHX-*3 (11)	150	Opp	220				Furnished								
823XBAHX-*3 (12)	423	Opp	78				Furnished								
823XJAHX-*3 (13)	279	Opp	118				Furnished								
823XMAHX-*3 (14)	238	Opp	139				Furnished								
823XRAHX-*3 (15)	172	Opp	191				Furnished								
823XTKTX-*3 (16)	142	Opp	231		8-A-165 (2)		Furnished								
880XBAHX-*3 (17)	423	Opp	78				Furnished								
880XDAHX-*3 (18)	357	Opp	92				Furnished								
880XGAHX-*3 (19)	329	Opp	100				Furnished								
880XJAHX-*3 (20)	279	Opp	118				Furnished								
880XMAHX-*3 (21)	238	Opp	139				Furnished								
880XQAHX-*3 (22)	203	Opp	162				Furnished								
880XRAHX-*3 (23)	172	Opp	191				Furnished								
880XTAHX-*3 (24)	134	Opp	246				Furnished								
ONE SPEED - TWO GEAR - POWERSHIFT (AIR)															
230XAAJX-*3	250	Opp	60			328481X	Furnished	230XAAJX-*3	250	Opp	58				Furnished
230XBAJX-*3	250	Opp	78			328481X	Furnished	230XBAJX-*3	250	Opp	75				Furnished
230XDAJX-*3	250	Opp	91			328481X	Furnished	230XDAJX-*3	250	Opp	87				Furnished
230XKAJX-*3	250	Opp	123			328481X	Furnished	230XKAJX-*3	250	Opp	117				Furnished
230XQAJX-*3	203	Opp	163			328481X	Furnished	230XQAJX-*3	212	Opp	156				Furnished
230XUAJX-*3	126	Opp	261			328481X	Furnished	230XUAJX-*3	132	Opp	250				Furnished
236ZDAHX-*3 (8)	250	Opp	120			328564X	Furnished	236XDAHX-*3 (8)	250	Opp	115				Furnished
236ZKAHX-*3 (8)	215	Opp	154			328564X	Furnished	236XKAHX-*3 (8)	224	Opp	147				Furnished
236ZQAHX-*3 (8)	160	Opp	207			328564X	Furnished	236XQAHX-*3 (8)	166	Opp	198				Furnished
236ZUAHX-*3 (8)	139	Opp	237			328564X	Furnished	236XUAHX-*3 (8)	145	Opp	227				Furnished
885XBAHX-*3 (17)	423	Opp	78				Furnished								
885XGAHX-*3 (19)	329	Opp	100				Furnished								
885XJAHX-*3 (20)	279	Opp	118				Furnished								
885XMAHX-*3 (21)	238	Opp	139				Furnished								

Continued Next Page

CAUTION: The Eaton UltraShift DM transmission must have an input signal from the Power Take-Off when it is active. In this active state, the clutch engagement is controlled when the operator raises the engine speed to engage the clutch and drive the transmission main box countershaft. Minimum engine/transmission speed required for PTO operation is 1000 RPM, per Eaton spec. "TRIG-2600". INCORRECT or NO P.T.O. interface signal to the transmission will result in uncontrolled engagement of the clutch during P.T.O. operation.

NOTE: Refer to Eaton Installation Guide "TRIG-2600" for proper wiring diagram showing the interface connections between the P.T.O. indicator switch and the terminal connection on the transmission.

NOTE: The Eaton Inertia Brake comes standard mounted on the bottom 8 bolt opening. If the 8 bolt opening is required for a P.T.O. the Interia Brake can be relocated to the right side 6 bolt opening. If there is any interference (frame rails, etc.) on the right side when mounting the Inertia Brake, a 630-02 adapter can be used to move the I-Brake away from the interference.

NOTE: If Ordering the 230/231 Series with the Shaft Brake Option, order the "BA" Output for Automatic Transmissions and the "BD" Output for Manual Transmissions.

NOTE: The 422XBAH Must use one of the Geared Adapters Listed on the Application Page. Direction of Rotation Shown is the Final Output Shaft Rotation w/ Geared Adapter.

(2) Filler block furnished with P.T.O.
(8) Input Gear Part No. 5-P-1004
(10) Input Gear Part No. 5-P-1246
(11) Input Gear Part No. 5-P-1322
(12) Input Gear Part No. 5-P-285
(13) Input Gear Part No. 5-P-325
(14) Input Gear Part No. 5-P-283
(15) Input Gear Part No. 5-P-721
(16) Input Gear Part No. 5-P-1395
(17) Input Gear Part No. 5-P-1100
(18) Input Gear Part No. 5-P-1101
(19) Input Gear Part No. 5-P-1135
(20) Input Gear Part No. 5-P-1102
(21) Input Gear Part No. 5-P-1103
(22) Input Gear Part No. 5-P-1385
(23) Input Gear Part No. 5-P-1104
(24) Input Gear Part No. 5-P-1105

Parker Hannifin Corporation
Chelsea Products Division
Olive Branch, MS 38654 USA

RTO-10910B-DM2	RTO-14910B-DM3
RTO-10910B-DM3	RTO-16910B-DM2
RTO-12910B-DM2	RTO-16910B-DM3
RTO-12910B-DM3	
RTO-14910B-DM2	

BOTTOM SIDE ONLY

TRANSMISSION GEAR DATA:
BOT 8-Bolt Opening Gear FORWARD of Centerline
47 Teeth - SPUR

PITCH LINE TO APERTURE FACE:
.8050" (20.4500MM)

RIGHT SIDE ONLY

TRANSMISSION GEAR DATA:
R.H. 6-Bolt Opening Gear FORWARD of Centerline
45 Teeth - SPUR

PITCH LINE TO APERTURE FACE:
1.0850" (27.5600MM)

Caution: Application Approval Required for P.T.O. Output Shaft Speeds Above 2500 R.P.M.

BOTTOM Side P.T.O. Model	Inter. Torq.	Dir. Rot.	Engine % Hi	Engine % Rev	Filler Block	Adapter Assy.	Stud Kit	RIGHT Side P.T.O. Model	Inter. Torq.	Dir. Rot.	Engine % Hi	Engine % Rev	Filler Block	Adapter Assy.	Stud Kit
ONE SPEED - FORWARD & REVERSE															
340SFAHX-*5 (25)	200	Opp	100	105	7-A-032(P) 7-A-140 (26)	310778X	Furnished	340XFAHX-*5 (25)	200	Opp	96	101	7-A-140 (2)		Furnished
352ZSAHX-*3 (8)	140	Opp	223	288		328564X	Furnished	352XSAHX-*3 (8)	140	Opp	213	276			Furnished
863XBAHX-*5	423	Opp	78	97			Furnished								
ONE SPEED - DUAL SHAFT															
452ZSAHX-*3 (8)	140	Opp	223			328564X	Furnished	452XSAHX-*3 (8)	140	Opp	213				Furnished
GEARED ADAPTERS															
628XAHX-3AH					8-A-032		Furnished	626XAHX-3AH							Furnished
								630-02		Eng					Furnished
								630XAHX-3AH							Furnished
								645XAHX-3AH							Furnished

Continued Next Page

CAUTION: The Eaton UltraShift DM transmission must have an input signal from the Power Take-Off when it is active. In this active state, the clutch engagement is controlled when the operator raises the engine speed to engage the clutch and drive the transmission main box countershaft. Minimum engine/transmission speed required for PTO operation is 1000 RPM, per Eaton spec. "TRIG-2600". INCORRECT or NO P.T.O. interface signal to the transmission will result in uncontrolled engagement of the clutch during P.T.O. operation.

NOTE: Refer to Eaton Installation Guide "TRIG-2600" for proper wiring diagram showing the interface connections between the P.T.O. indicator switch and the terminal connection on the transmission.

NOTE: The Eaton Inertia Brake comes standard mounted on the bottom 8 bolt opening. If the 8 bolt opening is required for a P.T.O. the Interia Brake can be relocated to the right side 6 bolt opening. If there is any interference (frame rails, etc.) on the right side when mounting the Inertia Brake, a 630-02 adapter can be used to move the I-Brake away from the interference.

NOTE: If Ordering the 230/231 Series with the Shaft Brake Option, order the "BA" Output for Automatic Transmissions and the "BD" Output for Manual Transmissions.

NOTE: The 422XBAH Must use one of the Geared Adapters Listed on the Application Page. Direction of Rotation Shown is the Final Output Shaft Rotation w/ Geared Adapter.

(2) Filler block furnished with P.T.O.
(8) Input Gear Part No. 5-P-1004
(25) Input Gear Part No. 5-P-581
(26) Filler block furnished with P.T.O. but not required

RTO-10910B-DM2	RTO-14910B-DM3
RTO-10910B-DM3	RTO-16910B-DM2
RTO-12910B-DM2	RTO-16910B-DM3
RTO-12910B-DM3	
RTO-14910B-DM2	

REAR SIDE ONLY | **RIGHT SIDE ONLY**

TRANSMISSION GEAR DATA:

REAR -Bolt Opening Gear NON-STANDARD of Centerline

58 Teeth - SPUR

PITCH LINE TO APERTURE FACE:

0" (0MM)

Caution: Application Approval Required for P.T.O. Output Shaft Speeds Above 2500 R.P.M.

REAR Side P.T.O. Model	Inter. Torq.	Dir. Rot.	Engine % Hi	Engine % Rev	Filler Block	Adapter Assy.	Stud Kit	RIGHT Side P.T.O. Model	Inter. Torq.	Dir. Rot.	Engine % Hi	Engine % Rev	Filler Block	Adapter Assy.	Stud Kit

REAR MOUNT & THRUSHAFT

541-LAU	400	Eng	91			Furnished
541-MAU	350	Eng	117			Furnished
541-NAU	300	Eng	133			Furnished

CAUTION: The Eaton UltraShift DM transmission must have an input signal from the Power Take-Off when it is active. In this active state, the clutch engagement is controlled when the operator raises the engine speed to engage the clutch and drive the transmission main box countershaft. Minimum engine/transmission speed required for PTO operation is 1000 RPM, per Eaton spec. "TRIG-2600". INCORRECT or NO P.T.O. interface signal to the transmission will result in uncontrolled engagement of the clutch during P.T.O. operation.

NOTE: Refer to Eaton Installation Guide "TRIG-2600" for proper wiring diagram showing the interface connections between the P.T.O. indicator switch and the terminal connection on the transmission.

NOTE: The Eaton Inertia Brake comes standard mounted on the bottom 8 bolt opening. If the 8 bolt opening is required for a P.T.O. the Interia Brake can be relocated to the right side 6 bolt opening. If there is any interference (frame rails, etc.) on the right side when mounting the Inertia Brake, a 630-02 adapter can be used to move the I-Brake away from the interference.

NOTE: If Ordering the 230/231 Series with the Shaft Brake Option, order the "BA" Output for Automatic Transmissions and the "BD" Output for Manual Transmissions.

NOTE: The 422XBAH Must use one of the Geared Adapters Listed on the Application Page. Direction of Rotation Shown is the Final Output Shaft Rotation w/ Geared Adapter.

Parker Hannifin Corporation
Chelsea Products Division
Olive Branch, MS 38654 USA

FORD

⚠ WARNING

FAILURE OR IMPROPER SELECTION OR IMPROPER USE OF THE PRODUCTS AND/OR SYSTEMS DESCRIBED HEREIN OR RELATED ITEMS CAN CAUSE DEATH, PERSONAL INJURY AND PROPERTY DAMAGE.

This document and other information from Parker Hannifin Corporation, its subsidiaries and authorized distributors provide product and/or system options for further investigation by users having technical expertise. It is important that you analyze all aspects of your application and review the information concerning the product or system in the current product catalog. Due to the variety of operating conditions and applications for these products or systems, the user, through its own analysis and testing, is solely responsible for making the final selection of the products and systems and assuring that all performance, safety and warning requirements of the application are met.

The products described herein, including without limitation, product features, specifications, designs, availability and pricing, are subject to change by Parker Hannifin Corporation and its subsidiaries at any time without notice.

Offer of Sale

The items described in this document are hereby offered for sale by Parker Hannifin Corporation, its subsidiaries or its authorized distributors. This offer and its acceptance are governed by the provisions stated in the "Offer of Sale".

© Copyright 2008, Parker Hannifin Corporation, All Rights Reserved

Parker Hannifin Corporation
Chelsea Products Division
Olive Branch, MS 38654 USA

Transmission Make and Model	P.T.O. Appl. Number	Number Forward Speeds	Teeth in P.T.O. Driver
S6-650 (Ford Truck Models Prior to January 2007)	ZF-45	6	L39
S6-650 (Ford Trucks Models After January 2007)	ZF-50	6	L39
TORQSHIFT (Ford Super Duty, LCF & International CF)	FRD-9	5	L121

IMPORTANT: See Safety Information in Section 1 of the Chelsea Applications catalog HY25-3000/US.

Transmission P.T.O. Driver & Aperatures (Viewed from Rear of Transmission)

L-Left Side R-Right Side B-Bottom Side T-Top Side

For transmission not listed, contact your authorized Chelsea Distributor.

January 2008

Parker Hannifin Corporation
Chelsea Products Division
Olive Branch, MS 38654 USA

TORQSHIFT

LEFT SIDE ONLY | **NO RIGHT SIDE APPLICATIONS AVAILABLE**

TRANSMISSION GEAR DATA:

L.H. 6-Bolt Opening Gear REAR of Centerline

121 Teeth - SPUR

PITCH LINE TO APERTURE FACE:

1.3390" (33.7800MM)

Caution: Application Approval Required for P.T.O. Output Shaft Speeds Above 2500 R.P.M.

LEFT Side P.T.O. Model	Inter. Torq.	Dir. Rot.	Engine % Hi	Engine % Rev	Filler Block	Adapter Assy.	Stud Kit	P.T.O. Model	Inter. Torq.	Dir. Rot.	Engine % Hi	Engine % Rev	Filler Block	Adapter Assy.	Stud Kit
ONE SPEED - TWO GEAR - POWERSHIFT (HYDRAULIC)															
247FMKSP-*2 (A) (1)	120	Opp	154				Furnished								
247FMKSP-*4 (B) (1)	120	Opp	154				Furnished								

Chelsea CGP-P11 Series Pump Specifications for 4x4 or 4x2 Vehicles (3/4"-11 Tooth Pump Spline)

Order Code	Chelsea Pump Model	Displacement in^3/rev	GPM (1)	Pump (1) HP	Torque (1) ft-lbs	Continuous Pressure PSI	Max Speed RPM
16	CGP-P11A016-5FC	0.37	2.9	6.0	17.0	3500	4000
26	CGP-P11A026-5FC	0.61	4.9	10.0	28.3	3500	3600
32	CGP-P11A032-5FC	0.73	5.8	12.0	34.0	3500	3300
37	CGP-P11A037-5FC	0.85	6.8	14.0	39.7	3500	3300
42	CGP-P11A042-5FC	0.98	7.8	16.0	45.3	3500	3000
55	CGP-P11A055-5FC	1.28	10.3	17.9	51.0	3000	2800
61	CGP-P11A061-5FC	1.40	11.3	18.0	51.2	2750	2800
71	CGP-P11A071-5FC	1.65	13.2	18.1	51.4	2350	2400
82	CGP-P11A082-5FC	1.89	15.1	18.5	52.7	2100	2300

Chelsea FGP-P17 Series Pump Specifications for 4x2 Vehicles Only (7/8"-13 Tooth Pump Spline)

Order Code	Chelsea Pump Model	Displacement in^3/rev	GPM (1)	Pump (1) HP	Torque (1) ft-lbs	Continuous Pressure PSI	Max Speed RPM
50	FGP-P17A050-2AN	1.16	9.3	19.6	55.8	3625	3300
66	FGP-P17A066-2AN	1.53	12.2	25.8	73.4	3625	3100
87	FGP-P17A087-2AN	2.01	16.1	34.1	96.8	3625	3100
10	FGP-P17A100-2AN	2.32	18.6	39.2	111.5	3625	3000
14	FGP-P17A137-2AN	3.17	25.4	43.0	122.1	2900	2600

NOTE: FGP-P17 Pumps have a special housing design for mounting to the Ford TorqShift transmission.

Chelsea P16 Series Pump Specifications for 4x2 Vehicles Only (7/8"-13 Tooth Pump Spline)

Order Code	Chelsea Pump Model	Displacement in^3/rev	GPM (1)	Pump (1) HP	Torque (1) ft-lbs	Continuous Pressure PSI	Max Speed RPM
18	P16-180A-2D1	3.511	28.1	36.1	102.5	2200	2500
20	P16-200A-2D1	3.902	31.2	36.4	103.5	2000	2000

(1)GPM & Pump Input HP @ 1200 Engine RPM & 1848 P.T.O. Output Shaft RPM

WARNING: To guarantee full torque capability at the automatic transmission P.T.O. gear, and the P.T.O., the TorqShift transmission torque converter must be locked (Engine RPM @ 1200 RPM), and hydraulic line pressure to the P.T.O. clutch must be elevated to a minimum of 110 psi. On Diesel engines the Stationary Elevated Idle Control (SEIC) strategy is 1200 RPM and on the Gas engines Stationary Elevated Idle Control (SEIC) strategy is 900 RPM. Therefore for stationary operations a discrete signal, which is supplied with Chelsea 247 wire harness 329598X, must be used to elevate engine idle to a minimum of 900 or 1200 RPM. Battery voltage must be applied to the P.T.O. circuit to begin SEIC strategy for both mobile and stationary applications. Failure to follow these procedures may lead to P.T.O. clutch wear and internal damage to the P.T.O/Transmission. See Chelsea Owner's/Installation Manual HY25-1715-M1/US or Contact Chelsea Technical Services (662-895-1052) for complete details.

NOTE (A): 247FMKSP-*2 -- 4 x 2 applications, all output options and all pumps listed in the pump chart are available.

NOTE (B): 247FMKSP-*4 -- 4 x 4 applications only and will come with a modified PGP-P11 (CGP-P11) pump attached to the P.T.O. from the factory when one of the following output option codes is ordered; 16,26,32,37,42,55,61,71,82. (See Pump Chart)

NOTE: Standard Parker PGP-P17 pumps may interfere with the transmission shift lever, order Chelsea FGP-P17 Series pumps to assure shifter clearance.

NOTE: The P.T.O. mounting gasket is supplied with the P.T.O. It is the correct thickness and material so that the customer does not have to set backlash. Do not use gasket supplied with the transmission under the 6-bolt cover plate.

NOTE: Ford provides an option for the use of one of the "Upfitter" Switches to be used as a P.T.O. switch. Chelsea does not recommend the use of the UNPROTECTED switch for P.T.O. function, but if required, contact Chelsea Technical Services for assistance.(662-895-1052)

(1) Input Gear Part No. 5-P-1387

Parker Chelsea

Parker Hannifin Corporation
Chelsea Products Division
Olive Branch, MS 38654 USA

⚠ WARNING

FAILURE OR IMPROPER SELECTION OR IMPROPER USE OF THE PRODUCTS AND/OR SYSTEMS DESCRIBED HEREIN OR RELATED ITEMS CAN CAUSE DEATH, PERSONAL INJURY AND PROPERTY DAMAGE.

This document and other information from Parker Hannifin Corporation, its subsidiaries and authorized distributors provide product and/or system options for further investigation by users having technical expertise. It is important that you analyze all aspects of your application and review the information concerning the product or system in the current product catalog. Due to the variety of operating conditions and applications for these products or systems, the user, through its own analysis and testing, is solely responsible for making the final selection of the products and systems and assuring that all performance, safety and warning requirements of the application are met.

The products described herein, including without limitation, product features, specifications, designs, availability and pricing, are subject to change by Parker Hannifin Corporation and its subsidiaries at any time without notice.

Offer of Sale

The items described in this document are hereby offered for sale by Parker Hannifin Corporation, its subsidiaries or its authorized distributors. This offer and its acceptance are governed by the provisions stated in the "Offer of Sale".

© Copyright 2008, Parker Hannifin Corporation, All Rights Reserved

Parker Hannifin Corporation
Chelsea Products Division
Olive Branch, MS 38654 USA

Transmission Make and Model	P.T.O. Appl. Number	Number Forward Speeds	Teeth in P.T.O. Driver
CH-465 (Code MM4 1968 to 1990)	CHV-2	4	L36-R36
GM-20	CHV-2	4	L36-R36
M-20	CHV-2	4	L36-R36
NVG-4500 (Code MT8 1991 to Feb. 1994)	NVG-1	5	L32-R32
NVG-4500 (Code MW3 After Feb. 1994)	NVG-2	5	L30-R30
SM-465 (GMC) (Code MM4 1968 to 1990)	CHV-2	4	L36-R36
1000 (GM 3600 Cab/Chassis)	ALL-17	5	R64



IMPORTANT: See Safety Information in Section I of the Chelsea Applications catalog HY25-3000/US.

Transmission P.T.O. Driver & Aperatures (Viewed from Rear of Transmission)

L-Left Side R-Right Side B-Bottom Side T-Top Side

For transmission not listed, contact your authorized Chelsea Distributor.

January 2008

Parker Hannifin Corporation
Chelsea Products Division
Olive Branch, MS 38654 USA

1000 (GM 3600 CAB-CHASSIS)

RIGHT SIDE ONLY

TRANSMISSION GEAR DATA:
R.H. 6-Bolt Opening Gear FORWARD of Centerline

64 Teeth - SPUR

PITCH LINE TO APERTURE FACE:
6.8648" (25.6032MM)

Caution: Application Approval Required for P.T.O. Output Shaft Speeds Above 2500 R.P.M.

P.T.O. Model	Inter. Torq.	Dir. Rot.	Engine % Hi	Engine % Rev	Filler Block	Adapter Assy.	Stud Kit	RIGHT Side P.T.O. Model	Inter. Torq.	Dir. Rot.	Engine % Hi	Engine % Rev	Filler Block	Adapter Assy.	Stud Kit
ONE SPEED - TWO GEAR - POWERSHIFT (HYDRAULIC)															
								250GDHVX-*5 (1)	120	Eng	122				Furnished
								250GMHVX-*5 (2)	50	Eng	178				Furnished

Pumps for 250 Series

Option Code Number	250 Series Pumps**	Cubic Inch Displace Diplacement	Gals/Min @ 1000 R.P.M.	Maximum Pressure (PSI)	Maximum Speed (R.P.M.)
508	CGP-P5C008-1AA	0.18	0.8	4400	4000
510	CGP-P5C010-1AA	0.23	1.0	4400	4000
513	CGP-P5C013-1AA	0.31	1.3	4400	4000
519	CGP-P5C019-1AA	0.44	1.9	4400	3300
1116	CGP-P11C016-1AC	0.37	1.6	4400	4000
1121	CGP-P11C021-1AC	0.49	2.1	4400	4000
1126	CGP-P11C026-1AC	0.60	2.6	4400	3600
1129	CGP-P11C029-1AC	0.67	2.9	4400	3600
1137	CGP-P11C037-1AC	0.85	3.7	4400	3300
1449	CGP-P31C054-1AE	1.24	5.4	3500	3000
1462	CGP-P31C061-1AE	1.43	6.2	3500	3000

** All 250 Series Pumps MUST be Rear Ported

CAUTION: Failure to use the approved provided components may cause premature failure of the power take-off, the transmission and /or the pump/hydraulic system. For MY 2006 and Prior - Installation Kit# 329331X was required for installation of heat shields and plumbing for the pump. For MY 2007 and Later special heat shields and pump plumbing are not required.

NOTE: There is torque converter lock up feature available with the 1000 series transmission. The torque converter lock up feature comes on and is controlled by the Transmission Control Module (TCM) at 1100 RPM transmission turbine speed when a signal is provided to the "PTO Enable" circuit of the TCM by the P.T.O. switch. This equates to 1200-1250 RPM or higher engine speed, depending on P.T.O. load. Lock up will only come on in the "PARK" position. The lock up clutch does not come on automatically in "DRIVE" at 1100 RPM. Refer to the appropriate owner's manual for wiring installation.

NOTE: The P.T.O. torque ratings shown are based on the maximum allowable torque of 250 lb-ft at the 64 tooth gear in the transmission with the P.T.O. on one opening only. With P.T.O.s mounted on both openings the maximum allowable torque at the 64 tooth gear in the transmission is 200 lb-ft. For a more precise evalution of your P.T.O. application refer to the Allison Body Builders Book, Section F, P.T.O. Systems Provisions.

NOTE: The 250 Series on the MY 2007 and later GM 3600 Cab/Chassis requires a wiring harness Chelsea part number 379930. This harness must be ordered seperatly and is required for proper P.T.O. to Engine interface operation. Refer to GM UI Bulletin #80.

NOTE: Only the 12v "B" option shifter can be used on this application.

NOTE: The left P.T.O. aperture opening on this application is not usable due to engine fuel lines blocking the opening.

(1) Input Gear Part No. 5-P-1294
(2) Input Gear Part No. 5-P-1386

Parker Hannifin Corporation
Chelsea Products Division
Olive Branch, MS 38654 USA

CH-465
GM-20
M-20
SM-465

LEFT SIDE ONLY

TRANSMISSION GEAR DATA:
L.H. 6-Bolt Opening Gear REAR of Centerline
36 Teeth - R.H. HELIX

PITCH LINE TO APERTURE FACE:
1.0850" (27.5600MM)

RIGHT SIDE ONLY

TRANSMISSION GEAR DATA:
R.H. 6-Bolt Opening Gear REAR of Centerline
36 Teeth - R.H. HELIX

PITCH LINE TO APERTURE FACE:
1.0850" (27.5600MM)

Caution: Application Approval Required for P.T.O. Output Shaft Speeds Above 2500 R.P.M.

LEFT Side P.T.O. Model	Inter. Torq.	Dir. Rot.	Engine % Hi	Engine % Rev	Filler Block	Adapter Assy.	Stud Kit	RIGHT Side P.T.O. Model	Inter. Torq.	Dir. Rot.	Engine % Hi	Engine % Rev	Filler Block	Adapter Assy.	Stud Kit
ONE SPEED - SINGLE GEAR - MECHANICAL SHIFT															
308712(*)	100	Eng	57				Furnished	100XRBQX-*4	125	Eng	57				8000-12X
ONE SPEED - TWO GEAR - MECHANICAL SHIFT															
442KFBQX-*6 (2)	250	Opp	35				7170-89X	442KFBQX-*4 (2)	250	Opp	35				7170-89X
442KLBQX-*6 (3)	250	Opp	45				7170-89X	442KLBQX-*4 (3)	250	Opp	45				7170-89X
442KQBQX-*6 (3)	225	Opp	48				7170-89X	442KQBQX-*4 (3)	225	Opp	48				7170-89X
442KRBQX-*6 (3)	225	Opp	56				7170-89X	442KRBQX-*4 (3)	225	Opp	56				7170-89X
442KSBQX-*6 (3)	200	Opp	67				7170-89X	442KSBQX-*4 (3)	200	Opp	67				7170-89X
442KUBQX-*6 (3)	195	Opp	80				7170-89X	442KUBQX-*4 (3)	195	Opp	80				7170-89X
442KWBQX-*6 (3)	175	Opp	94				7170-89X	442KWBQX-*4 (3)	175	Opp	94				7170-89X
442KXBQX-*6 (3)	140	Opp	111				7170-89X	442KXBQX-*4 (3)	140	Opp	111				7170-89X
ONE SPEED - TWO GEAR - POWERSHIFT (AIR)															
236KDBQX-*6 (3)	250	Opp	36				7170-89X	236KDBQX-*4 (3)	250	Opp	36				7170-89X
236KKBQX-*6 (3)	250	Opp	47				7170-89X	236KKBQX-*4 (3)	250	Opp	47				7170-89X
236KQBQX-*6 (3)	250	Opp	63				7170-89X	236KQBQX-*4 (3)	250	Opp	63				7170-89X
236KUBQX-*6 (3)	225	Opp	72				7170-89X	236KUBQX-*4 (3)	225	Opp	72				7170-89X
ONE SPEED - FORWARD & REVERSE															
340XFBQX-*4 (4)	200	Opp	32	33	7-A-140 (5)		7170-2X	340XFBQX-*4 (4)	200	Opp	32	33	7-A-140 (5)		7170-2X
352XSBQX-*6 (3)	140	Opp	68	88			7170-89X	352XSBQX-*4 (3)	140	Opp	68	88			7170-89X
TWO SPEEDS - FORWARD & REVERSE															
321XNBQX-*6	140	Opp	96	65			7170-90X	321XNBQX-*4	140	Opp	96	65			7170-90X
ONE SPEED - DUAL SHAFT															
452XSBQX-*6 (3)	140	Opp	68				7170-89X	452XSBQX-*6 (3)	140	Opp	68				7170-89X
GEARED ADAPTERS															
626KBQX-3BP							7170-89X	626KBQX-4BP							7170-89X
630KBQX-3BP							7170-89X	630KBQX-4BP							7170-89X
645KBQX-3BP							7170-89X	645KBQX-4BP							7170-89X

(*) Single Gear P.T.O. with Extra Long Shaft.

(2) Input Gear Part No. 5-P-1084
(3) Input Gear Part No. 5-P-1023
(4) Input Gear Part No. 5-P-720
(5) Filler block furnished with P.T.O.

Parker Hannifin Corporation
Chelsea Products Division
Olive Branch, MS 38654 USA

NVG-4500

4500

LEFT SIDE ONLY	RIGHT SIDE ONLY
TRANSMISSION GEAR DATA: L.H. 6-Bolt Opening Gear FORWARD of Centerline 32 Teeth - R.H. HELIX **PITCH LINE TO APERTURE FACE:** 1.0110" (25.6794MM)	**TRANSMISSION GEAR DATA:** R.H. 6-Bolt Opening Gear FORWARD of Centerline 32 Teeth - R.H. HELIX **PITCH LINE TO APERTURE FACE:** 1.0110" (25.6794MM)

Caution: Application Approval Required for P.T.O. Output Shaft Speeds Above 2500 R.P.M.

LEFT Side P.T.O. Model	Inter. Torq.	Dir. Rot.	Engine % Hi	Engine % Rev	Filler Block	Adapter Assy.	Stud Kit	RIGHT Side P.T.O. Model	Inter. Torq.	Dir. Rot.	Engine % Hi	Engine % Rev	Filler Block	Adapter Assy.	Stud Kit
ONE SPEED - TWO GEAR - MECHANICAL SHIFT															
442XLFBX-*5 (1)	250	Opp	48				Furnished	442XLFBX-*3 (1)	250	Opp	48				Furnished
442XQFBX-*5 (1)	225	Opp	52				Furnished	442XQFBX-*3 (1)	225	Opp	52				Furnished
442XRFBX-*5 (1)	225	Opp	60				Furnished	442XRFBX-*3 (1)	225	Opp	60				Furnished
442XSFBX-*5 (1)	200	Opp	72				Furnished	442XSFBX-*3 (1)	200	Opp	72				Furnished
442XUFBX-*5 (1)	195	Opp	85				Furnished	442XUFBX-*3 (1)	195	Opp	85				Furnished
442XWFBX-*5 (1)	175	Opp	100				Furnished	442XWFBX-*3 (1)	175	Opp	100				Furnished
442XXFBX-*5 (1)	140	Opp	119				Furnished	442XXFBX-*3 (1)	140	Opp	119				Furnished
ONE SPEED - FORWARD & REVERSE															
352XSFBX-*5 (1)	140	Opp	73	94			Furnished	352XSFBX-*3 (1)	140	Opp	73	94			Furnished
ONE SPEED - DUAL SHAFT															
452XSFBX-*3 (1)	140	Opp	73				Furnished	452XSFBX-*3 (1)	140	Opp	73				Furnished

NOTE: No adapters available for this application.

NOTE: The 100 series is not released for this transmission because there is no tooth round on the P.T.O. drive gear.

(1) Input Gear Part No. 5-P-1063

Parker Chelsea

Parker Hannifin Corporation
Chelsea Products Division
Olive Branch, MS 38654 USA

NVG-4500

4500

LEFT SIDE ONLY

TRANSMISSION GEAR DATA:

L.H. 6-Bolt Opening Gear FORWARD of Centerline

30 Teeth - R.H. HELIX

PITCH LINE TO APERTURE FACE:

1.1200" (30.4800MM)

RIGHT SIDE ONLY

TRANSMISSION GEAR DATA:

R.H. 6-Bolt Opening Gear FORWARD of Centerline

30 Teeth - R.H. HELIX

PITCH LINE TO APERTURE FACE:

1.1200" (30.4800MM)

Caution: Application Approval Required for P.T.O. Output Shaft Speeds Above 2500 R.P.M.

LEFT Side P.T.O. Model	Inter. Torq.	Dir. Rot.	Engine % Hi	Engine % Rev	Filler Block	Adapter Assy.	Stud Kit	RIGHT Side P.T.O. Model	Inter. Torq.	Dir. Rot.	Engine % Hi	Engine % Rev	Filler Block	Adapter Assy.	Stud Kit
ONE SPEED - TWO GEAR - MECHANICAL SHIFT															
442XLFCX-*5 (1)	250	Opp	49				Furnished	442XLFCX-*3 (1)	250	Opp	49				Furnished
442XQFCX-*5 (1)	225	Opp	53				Furnished	442XQFCX-*3 (1)	225	Opp	53				Furnished
442XRFCX-*5 (1)	225	Opp	61				Furnished	442XRFCX-*3 (1)	225	Opp	61				Furnished
442XSFCX-*5 (1)	200	Opp	73				Furnished	442XSFCX-*3 (1)	200	Opp	73				Furnished
442XUFCX-*5 (1)	195	Opp	87				Furnished	442XUFCX-*3 (1)	195	Opp	87				Furnished
442XWFCX-*5 (1)	175	Opp	102				Furnished	442XWFCX-*3 (1)	175	Opp	102				Furnished
442XXFCX-*5 (1)	140	Opp	121				Furnished	442XXFCX-*3 (1)	140	Opp	121				Furnished
ONE SPEED - FORWARD & REVERSE															
352XSFCX-*5 (1)	140	Opp	74	96			Furnished	352XSFCX-*3 (1)	140	Opp	74	96			Furnished
ONE SPEED - DUAL SHAFT															
452XSFCX-*3 (1)	140	Opp	74				Furnished	452XSFCX-*3 (1)	140	Opp	74				Furnished

NOTE: The 100 series is not released for this transmission because there is no tooth round on the P.T.O. drive gear.

(1) Input Gear Part No. 5-P-1064

Parker Chelsea

Parker Hannifin Corporation
Chelsea Products Division
Olive Branch, MS 38654 USA

Notes

HINO

⚠ WARNING

FAILURE OR IMPROPER SELECTION OR IMPROPER USE OF THE PRODUCTS AND/OR SYSTEMS DESCRIBED HEREIN OR RELATED ITEMS CAN CAUSE DEATH, PERSONAL INJURY AND PROPERTY DAMAGE.

This document and other information from Parker Hannifin Corporation, its subsidiaries and authorized distributors provide product and/or system options for further investigation by users having technical expertise. It is important that you analyze all aspects of your application and review the information concerning the product or system in the current product catalog. Due to the variety of operating conditions and applications for these products or systems, the user, through its own analysis and testing, is solely responsible for making the final selection of the products and systems and assuring that all performance, safety and warning requirements of the application are met.

The products described herein, including without limitation, product features, specifications, designs, availability and pricing, are subject to change by Parker Hannifin Corporation and its subsidiaries at any time without notice.

Offer of Sale

The items described in this document are hereby offered for sale by Parker Hannifin Corporation, its subsidiaries or its authorized distributors. This offer and its acceptance are governed by the provisions stated in the "Offer of Sale".

© Copyright 2008, Parker Hannifin Corporation, All Rights Reserved

Parker Hannifin Corporation
Chelsea Products Division
Olive Branch, MS 38654 USA

Transmission Make and Model	P.T.O. Appl. Number	Number Forward Speeds	Teeth in P.T.O. Driver
LF05S (MODEL 1415 & 1715)	HNO-9	5	L30
LF05S (MODEL 1415 & 1715 - AFTER JAN. 1999)	HNO-12	5	L29
LF06S (DG Code)	HNO-4	6	L34
LF06S (DH Code)	HNO-6	6	L33
LF06S (DJ Code)	HNO-6	6	L33
LF06S (MODEL 2218 & 2218LP)	HNO-11	6	L34
MG06S (LK Code)	HNO-5	6	L37
MG06S (LL Code)	HNO-8	6	L39

IMPORTANT: See Safety Information in Section I of the Chelsea Applications catalog HY25-3000/US.

Transmission P.T.O. Driver & Aperatures (Viewed from Rear of Transmission)

L-Left Side R-Right Side B-Bottom Side T-Top Side

For transmission not listed, contact your authorized Chelsea Distributor.

January 2008

Parker Hannifin Corporation
Chelsea Products Division
Olive Branch, MS 38654 USA

LF06S

LEFT SIDE ONLY

TRANSMISSION GEAR DATA:
L.H. 8-Bolt Opening Gear NON-STANDARD of Centerline
34 Teeth - R.H. HELIX

PITCH LINE TO APERTURE FACE:
2.5370" (64.4400MM)

Caution: Application Approval Required for P.T.O. Output Shaft Speeds Above 2500 R.P.M.

LEFT Side P.T.O. Model	Inter. Torq.	Dir. Rot.	Engine % Hi	Engine % Rev	Filler Block	Adapter Assy.	Stud Kit	P.T.O. Model	Inter. Torq.	Dir. Rot.	Engine % Hi	Engine % Rev	Filler Block	Adapter Assy.	Stud Kit
ONE SPEED - SINGLE GEAR - MECHANICAL SHIFT															
100XRAHX-*4 (1)	125	Opp	74			328962X	Furnished								
ONE SPEED - TWO GEAR - MECHANICAL SHIFT															
221XCAHX-*6	250	Eng	33		7-A-032 (2)	328962X	Furnished								
221XEAHX-*6	250	Eng	38			328962X	Furnished								
221XLAHX-*6	200	Eng	51			328962X	Furnished								
442XFAHX-*6 (3)	250	Eng	46			328962X	Furnished								
442XHAHX-*6 (4)	250	Eng	53			328962X	Furnished								
442XLAHX-*6 (5)	250	Eng	59			328962X	Furnished								
442XQAHX-*6 (5)	225	Eng	64			328962X	Furnished								
442XRAHX-*6 (5)	225	Eng	74			328962X	Furnished								
442XSAHX-*6 (5)	200	Eng	88			328962X	Furnished								
442XUAHX-*6 (5)	195	Eng	105			328962X	Furnished								
442XWAHX-*6 (5)	175	Eng	123			328962X	Furnished								
442XXAHX-*6 (5)	140	Eng	146			328962X	Furnished								
ONE SPEED - TWO GEAR - POWERSHIFT (AIR)															
236XDAHX-*6 (5)	250	Eng	48			328962X	Furnished								
236XKAHX-*6 (5)	250	Eng	62			328962X	Furnished								
236XQAHX-*6 (5)	250	Eng	83			328962X	Furnished								
236XUAHX-*6 (5)	225	Eng	95			328962X	Furnished								
ONE SPEED - FORWARD & REVERSE															
340XFAHX-*4 (6)	200	Eng	40	42	7-A-140 (2)	328962X	Furnished								
352XSAHX-*6 (5)	140	Eng	89	115		328962X	Furnished								
ONE SPEED - DUAL SHAFT															
452XSAHX-*6 (5)	140	Eng	89			328962X	Furnished								

NOTE: The "XQ" output flange can only be used in a number "3" arrangement due to interference between the housing and mounting flange in the number "6" arrangement.

(1) Gear and Shaft Kit No. KXA-2-P-565
(2) Filler block furnished with P.T.O.
(3) Input Gear Part No. 5-P-1077
(4) Input Gear Part No. 5-P-1364
(5) Input Gear Part No. 5-P-1004
(6) Input Gear Part No. 5-P-581

MG06S

LEFT SIDE ONLY

TRANSMISSION GEAR DATA:
L.H. 8-Bolt Opening Gear NON-STANDARD of Centerline
37 Teeth - R.H. HELIX

PITCH LINE TO APERTURE FACE:
2.5430" (64.5900MM)

Caution: Application Approval Required for P.T.O. Output Shaft Speeds Above 2500 R.P.M.

LEFT Side P.T.O. Model	Inter. Torq.	Dir. Rot.	Engine % Hi	Engine % Rev	Filler Block	Adapter Assy.	Stud Kit	P.T.O. Model	Inter. Torq.	Dir. Rot.	Engine % Hi	Engine % Rev	Filler Block	Adapter Assy.	Stud Kit
ONE SPEED - TWO GEAR - MECHANICAL SHIFT															
442ZFAHX-*6 (1)	250	Eng	57			328993X	Furnished								
442ZHAHX-*6 (2)	250	Eng	66			328993X	Furnished								
442ZLAHX-*6 (3)	250	Eng	73			328993X	Furnished								
442ZQAHX-*6 (3)	225	Eng	79			328993X	Furnished								
442ZRAHX-*6 (3)	225	Eng	91			328993X	Furnished								
ONE SPEED - TWO GEAR - POWERSHIFT (AIR)															
236ZDAHX-*6 (3)	250	Eng	59			328993X	Furnished								
236ZKAHX-*6 (3)	250	Eng	76			328993X	Furnished								
236ZQAHX-*6 (3)	250	Eng	102			328993X	Furnished								
236ZUAHX-*6 (3)	225	Eng	117			328993X	Furnished								
ONE SPEED - FORWARD & REVERSE															
352ZSAHX-*6 (3)	140	Eng	110	143		328993X	Furnished								
ONE SPEED - DUAL SHAFT															
452ZSAHX-*6 (3)	140	Eng	110			328993X	Furnished								

NOTE: Shiftable input gear P.T.O. models will not mount on this adapter because sliding input gear will hit the 19-tooth cluster gear. Also 442 S, U, W and X ratios will not mount to the adapter due to gear interference.

(1) Input Gear Part No. 5-P-1077
(2) Input Gear Part No. 5-P-1364
(3) Input Gear Part No. 5-P-1004

Parker Hannifin Corporation
Chelsea Products Division
Olive Branch, MS 38654 USA

LF06S
LF06S

LEFT SIDE ONLY

TRANSMISSION GEAR DATA:
L.H. 8-Bolt Opening Gear NON-STANDARD of Centerline
33 Teeth - R.H. HELIX

PITCH LINE TO APERTURE FACE:
2.6480" (67.2592MM)

Caution: Application Approval Required for P.T.O. Output Shaft Speeds Above 2500 R.P.M.

LEFT Side P.T.O. Model	Inter. Torq.	Dir. Rot.	Engine % Hi	Engine % Rev	Filler Block	Adapter Assy.	Stud Kit	P.T.O. Model	Inter. Torq.	Dir. Rot.	Engine % Hi	Engine % Rev	Filler Block	Adapter Assy.	Stud Kit
ONE SPEED - SINGLE GEAR - MECHANICAL SHIFT															
100XRAHX-*4 (1)	125	Opp	77		329293X	329007X	Furnished								
ONE SPEED - TWO GEAR - MECHANICAL SHIFT															
221XCAHX-*6	250	Eng	34		7-A-032 (2) 329293X(T)	329007X	Furnished								
221XEAHX-*6	250	Eng	39		329293X	329007X	Furnished								
221XLAHX-*6	200	Eng	53		329293X	329007X	Furnished								
442XFAHX-*6 (3)	250	Eng	47		329293X	329007X	Furnished								
442XHAHX-*6 (4)	250	Eng	55		329293X	329007X	Furnished								
442XLAHX-*6 (5)	250	Eng	61		329293X	329007X	Furnished								
442XQAHX-*6 (5)	225	Eng	66		329293X	329007X	Furnished								
442XRAHX-*6 (5)	225	Eng	77		329293X	329007X	Furnished								
442XSAHX-*6 (5)	200	Eng	91		329293X	329007X	Furnished								
442XUAHX-*6 (5)	195	Eng	109		329293X	329007X	Furnished								
442XWAHX-*6 (5)	175	Eng	128		329293X	329007X	Furnished								
442XXAHX-*6 (5)	140	Eng	151		329293X	329007X	Furnished								
ONE SPEED - TWO GEAR - POWERSHIFT (AIR)															
236XDAHX-*6 (5)	250	Eng	49		329293X	329007X	Furnished								
236XKAHX-*6 (5)	250	Eng	64		329293X	329007X	Furnished								
236XQAHX-*6 (5)	250	Eng	86		329293X	329007X	Furnished								
236XUAHX-*6 (5)	225	Eng	98		329293X	329007X	Furnished								
ONE SPEED - FORWARD & REVERSE															
340XFAHX-*4 (6)	200	Eng	41	44	7-A-140 (2) 329293X(T)	329007X	Furnished								
352XSAHX-*6 (5)	140	Eng	92	120	329293X	329007X	Furnished								
ONE SPEED - DUAL SHAFT															
452XSAHX-*6 (5)	140	Eng	92		329293X	329007X	Furnished								

NOTE: For P.T.O. speeds for DJ transmission, multiply speeds shown by .933.NOTE: The "XQ" output flange can only be used in the number 3 arrangement due to interference between the housing and mounting flange in the number "6" arrangement.

(1) Gear and Shaft Kit No. KXA-2-P-565
(2) Filler block furnished with P.T.O. but not required
(3) Input Gear Part No. 5-P-1077
(4) Input Gear Part No. 5-P-1364
(5) Input Gear Part No. 5-P-1004
(6) Input Gear Part No. 5-P-581

MG06S

LEFT SIDE ONLY

TRANSMISSION GEAR DATA:

L.H. 8-Bolt Opening Gear NON-STANDARD of Centerline

39 Teeth - R.H. HELIX

PITCH LINE TO APERTURE FACE:

2.3730" (60.2742MM)

Caution: Application Approval Required for P.T.O. Output Shaft Speeds Above 2500 R.P.M.

LEFT Side P.T.O. Model	Inter. Torq.	Dir. Rot.	Engine % Hi	Engine % Rev	Filler Block	Adapter Assy.	Stud Kit	P.T.O. Model	Inter. Torq.	Dir. Rot.	Engine % Hi	Engine % Rev	Filler Block	Adapter Assy.	Stud Kit
ONE SPEED - TWO GEAR - MECHANICAL SHIFT															
442ZFAHX-*6 (1)	250	Eng	60		23-P-66-3	328993X	Furnished								
442ZHAHX-*6 (2)	250	Eng	70		23-P-66-3	328993X	Furnished								
442ZLAHX-*6 (3)	250	Eng	77		23-P-66-3	328993X	Furnished								
442ZQAHX-*6 (3)	225	Eng	83		23-P-66-3	328993X	Furnished								
442ZRAHX-*6 (3)	225	Eng	96		23-P-66-3	328993X	Furnished								
ONE SPEED - TWO GEAR - POWERSHIFT (AIR)															
236ZDAHX-*6 (3)	250	Eng	62		23-P-66-3	328993X	Furnished								
236ZKAHX-*6 (3)	250	Eng	80		23-P-66-3	328993X	Furnished								
ONE SPEED - FORWARD & REVERSE															
352ZSAHX-*6 (3)	140	Eng	116	150	23-P-66-3	328993X	Furnished								
ONE SPEED - DUAL SHAFT															
452ZSAHX-*6 (3)	140	Eng	116		23-P-66-3	328993X	Furnished								

NOTE: Shiftable input gear P.T.O.s along with 442 series in S,U,W,or X ratios will not mount on this adapter. This is due to interference with the cluster gear in the adapter.

(1) Input Gear Part No. 5-P-1077
(2) Input Gear Part No. 5-P-1364
(3) Input Gear Part No. 5-P-1004

Parker Chelsea

Parker Hannifin Corporation
Chelsea Products Division
Olive Branch, MS 38654 USA

LF05S

LEFT SIDE ONLY

TRANSMISSION GEAR DATA:
L.H. 8-Bolt Opening Gear NON-STANDARD of Centerline
30 Teeth - R.H. HELIX

PITCH LINE TO APERTURE FACE:
2.8730" (72.9700MM)

Caution: Application Approval Required for P.T.O. Output Shaft Speeds Above 2500 R.P.M.

LEFT Side P.T.O. Model	Inter. Torq.	Dir. Rot.	Engine % Hi	Engine % Rev	Filler Block	Adapter Assy.	Stud Kit	P.T.O. Model	Inter. Torq.	Dir. Rot.	Engine % Hi	Engine % Rev	Filler Block	Adapter Assy.	Stud Kit
ONE SPEED - TWO GEAR - MECHANICAL SHIFT															
442XFAHX-*6 (1)	250	Eng	35		329293X	329095X	Furnished								
442XHAHX-*6 (2)	250	Eng	41		329293X	329095X	Furnished								
442XLAHX-*6 (3)	250	Eng	46		329293X	329095X	Furnished								
442XQAHX-*6 (3)	225	Eng	49		329293X	329095X	Furnished								
442XRAHX-*6 (3)	225	Eng	57		329293X	329095X	Furnished								
442XSAHX-*6 (3)	200	Eng	68		329293X	329095X	Furnished								
ONE SPEED - TWO GEAR - POWERSHIFT (AIR)															
236XDAHX-*6 (3)	250	Eng	37		329293X	329095X	Furnished								
236XKAHX-*6 (3)	250	Eng	47		329293X	329095X	Furnished								
236XQAHX-*6 (3)	250	Eng	64		329293X	329095X	Furnished								
236XUAHX-*6 (3)	225	Eng	73		329293X	329095X	Furnished								
ONE SPEED - FORWARD & REVERSE															
340XFAHX-*4 (4)	200	Eng	31	33	7-A-140 (5) 329293X	329095X	Furnished								
352XSAHX-*6 (3)	140	Eng	69	89	329293X	329095X	Furnished								
ONE SPEED - DUAL SHAFT															
452XSAHX-*6 (3)	140	Eng	69		329293X(T)	329095X	Furnished								

NOTE: Shiftable input gear P.T.O.s along with 442 series in U,W, or X ratios will not mount on this adapter. This is due to interference with the cluster gear in the adapter.

(1) Input Gear Part No. 5-P-1077
(2) Input Gear Part No. 5-P-1364
(3) Input Gear Part No. 5-P-1004
(4) Input Gear Part No. 5-P-581
(5) Filler block furnished with P.T.O. but not required

LF06S

LEFT SIDE ONLY

TRANSMISSION GEAR DATA:
L.H. 8-Bolt Opening Gear NON-STANDARD of Centerline
34 Teeth - R.H. HELIX

PITCH LINE TO APERTURE FACE:
2.5370" (64.4440MM)

Caution: Application Approval Required for P.T.O. Output Shaft Speeds Above 2500 R.P.M.

LEFT Side P.T.O. Model	Inter. Torq.	Dir. Rot.	Engine % Hi	Engine % Rev	Filler Block	Adapter Assy.	Stud Kit	P.T.O. Model	Inter. Torq.	Dir. Rot.	Engine % Hi	Engine % Rev	Filler Block	Adapter Assy.	Stud Kit
ONE SPEED - SINGLE GEAR - MECHANICAL SHIFT															
100XRAHX-*4 (1)	125	Opp	99			328962X	Furnished								
ONE SPEED - TWO GEAR - MECHANICAL SHIFT															
221XCAHX-*6	250	Eng	44		7-A-032 (2)	328962X	Furnished								
221XEAHX-*6	250	Eng	51			328962X	Furnished								
221XLAHX-*6	200	Eng	68			328962X	Furnished								
221XPAHX-*6	200	Eng	83			328962X	Furnished								
442XFAHX-*6 (3)	250	Eng	61			328962X	Furnished								
442XHAHX-*6 (4)	250	Eng	71			328962X	Furnished								
442XLAHX-*6 (5)	250	Eng	79			328962X	Furnished								
442XQAHX-*6 (5)	225	Eng	86			328962X	Furnished								
442XRAHX-*6 (5)	225	Eng	99			328962X	Furnished								
442XSAHX-*6 (5)	200	Eng	118			328962X	Furnished								
ONE SPEED - TWO GEAR - POWERSHIFT (AIR)															
236XDAHX-*6 (5)	250	Eng	64			328962X	Furnished								
236XKAHX-*6 (5)	250	Eng	82			328962X	Furnished								
236XQAHX-*6 (5)	250	Eng	111			328962X	Furnished								
236XUAHX-*6 (5)	225	Eng	127			328962X	Furnished								
ONE SPEED - FORWARD & REVERSE															
340XFAHX-*4 (6)	200	Eng	54	56	7-A-140 (2)	328962X	Furnished								
352XSAHX-*6 (5)	140	Eng	119	155		328962X	Furnished								
ONE SPEED - DUAL SHAFT															
452XSAHX-*6 (5)	140	Eng	119			328962X	Furnished								

NOTE: The "XQ" output flange can only be used in a number 3 arrangement due to interference between the housing and mounting flange in the number 6 arrangement.

NOTE: Shiftable input gear P.T.O.s along with 442 series in U,W, or X ratios will not mount on this adapter. This is due to interference with the cluster gear in the adapter.

(1) Gear and Shaft Kit No. KXA-2-P-565
(2) Filler block furnished with P.T.O.
(3) Input Gear Part No. 5-P-1077
(4) Input Gear Part No. 5-P-1364
(5) Input Gear Part No. 5-P-1004
(6) Input Gear Part No. 5-P-581

Parker Chelsea

Parker Hannifin Corporation
Chelsea Products Division
Olive Branch, MS 38654 USA

LF05S

LEFT SIDE ONLY

TRANSMISSION GEAR DATA:
L.H. 8-Bolt Opening Gear FORWARD of Centerline
29 Teeth - R.H. HELIX

PITCH LINE TO APERTURE FACE:
2.8730" (72.9742MM)

Caution: Application Approval Required for P.T.O. Output Shaft Speeds Above 2500 R.P.M.

LEFT Side P.T.O. Model	Inter. Torq.	Dir. Rot.	Engine % Hi	Engine % Rev	Filler Block	Adapter Assy.	Stud Kit	P.T.O. Model	Inter. Torq.	Dir. Rot.	Engine % Hi	Engine % Rev	Filler Block	Adapter Assy.	Stud Kit
ONE SPEED - TWO GEAR - MECHANICAL SHIFT															
442XFAHX-*6 (1)	250	Eng	37			329095X	Furnished								
442XHAHX-*6 (2)	250	Eng	43			329095X	Furnished								
442XLAHX-*6 (3)	250	Eng	48			329095X	Furnished								
442XQAHX-*6 (3)	225	Eng	51			329095X	Furnished								
442XRAHX-*6 (3)	225	Eng	59			329095X	Furnished								
442XSAHX-*6 (3)	200	Eng	71			329095X	Furnished								
ONE SPEED - TWO GEAR - POWERSHIFT (AIR)															
236XDAHX-*6 (3)	250	Eng	39			329095X	Furnished								
236XKAHX-*6 (3)	250	Eng	49			329095X	Furnished								
236XQAHX-*6 (3)	250	Eng	66			329095X	Furnished								
236XUAHX-*6 (3)	225	Eng	76			329095X	Furnished								
ONE SPEED - FORWARD & REVERSE															
340XFAHX-*4 (4)	200	Eng	32	34	7-A-140 (5)	329095X	Furnished								
352XSAHX-*6 (3)	140	Eng	71	92		329095X	Furnished								
ONE SPEED - DUAL SHAFT															
452XSAHX-*6 (3)	140	Eng	71			329095X	Furnished								

NOTE: Shiftable input gear P.T.O.s along with 442 series in U,W, or X ratios will not mount on this adapter. This is due to interference with the cluster gear in the adapter.

(1) Input Gear Part No. 5-P-1077
(2) Input Gear Part No. 5-P-1364
(3) Input Gear Part No. 5-P-1004
(4) Input Gear Part No. 5-P-581
(5) Filler block furnished with P.T.O.

ISUZU

⚠ WARNING

FAILURE OR IMPROPER SELECTION OR IMPROPER USE OF THE PRODUCTS AND/OR SYSTEMS DESCRIBED HEREIN OR RELATED ITEMS CAN CAUSE DEATH, PERSONAL INJURY AND PROPERTY DAMAGE.

This document and other information from Parker Hannifin Corporation, its subsidiaries and authorized distributors provide product and/or system options for further investigation by users having technical expertise. It is important that you analyze all aspects of your application and review the information concerning the product or system in the current product catalog. Due to the variety of operating conditions and applications for these products or systems, the user, through its own analysis and testing, is solely responsible for making the final selection of the products and systems and assuring that all performance, safety and warning requirements of the application are met.

The products described herein, including without limitation, product features, specifications, designs, availability and pricing, are subject to change by Parker Hannifin Corporation and its subsidiaries at any time without notice.

Offer of Sale

The items described in this document are hereby offered for sale by Parker Hannifin Corporation, its subsidiaries or its authorized distributors. This offer and its acceptance are governed by the provisions stated in the "Offer of Sale".

© Copyright 2008, Parker Hannifin Corporation, All Rights Reserved

Parker Hannifin Corporation
Chelsea Products Division
Olive Branch, MS 38654 USA

Transmission Make and Model	P.T.O. Appl. Number	Number Forward Speeds	Teeth in P.T.O. Driver
ISUZU (ELECTROMATIC 1989 Model Year)	IZU-9	4	L63
MBD-5A (Spicer Australia Only)	IZU-8	5	L34
MBG-5A	IZU-8	5	L34
MBG-5B	IZU-1	5	L35
MBG-5C (Spicer Australia Only)	IZU-7	5	L34
MBG-5F	IZU-2	5	L37
MBG-5H	IZU-1	5	L35
MBP-6P	IZU-13	6	L28
MLD-6C	IZU-6	6	L33
MLD-6E	IZU-5	6	L34
MLD-6F	IZU-10	6	L35
MLD-6Q	IZU-11	6	L36
MLH-5G	IZU-3	5	L40
MZZ-6U (Will replace the MSA5D beginning in 2002)	IZU-17	6	L37
450-43LE (Case Serial # 8D3394 and Later)	IZU-12	4	L58

IMPORTANT: See Safety Information in Section I of the Chelsea Applications catalog HY25-3000/US.

Transmission P.T.O. Driver & Aperatures (Viewed from Rear of Transmission)

L-Left Side R-Right Side B-Bottom Side T-Top Side

For transmission not listed, contact your authorized Chelsea Distributor.

January 2008

Parker Hannifin Corporation
Chelsea Products Division
Olive Branch, MS 38654 USA

MBG-5B
MBG-5H

LEFT SIDE ONLY

TRANSMISSION GEAR DATA:
L.H. 8-Bolt Opening Gear NON-STANDARD of Centerline
35 Teeth - R.H. HELIX

PITCH LINE TO APERTURE FACE:
1.2970" (32.9440MM)

Caution: Application Approval Required for P.T.O. Output Shaft Speeds Above 2500 R.P.M.

LEFT Side P.T.O. Model	Inter. Torq.	Dir. Rot.	Engine % Hi	Engine % Rev	Filler Block	Adapter Assy.	Stud Kit	P.T.O. Model	Inter. Torq.	Dir. Rot.	Engine % Hi	Engine % Rev	Filler Block	Adapter Assy.	Stud Kit
ONE SPEED - SINGLE GEAR - MECHANICAL SHIFT															
100XRAHX-*4 (1)	125	Opp	68			328960-1X	Furnished								
ONE SPEED - TWO GEAR - MECHANICAL SHIFT															
221XCAHX-*6	250	Eng	30		7-A-032 (2)	328960-1X	Furnished								
221XEAHX-*6	250	Eng	35			328960-1X	Furnished								
221XLAHX-*6	200	Eng	47			328960-1X	Furnished								
221XPAHX-*6	200	Eng	57			328960-1X	Furnished								
442XFAHX-*6 (3)	250	Eng	42			328960-1X	Furnished								
442XHAHX-*6 (4)	250	Eng	49			328960-1X	Furnished								
442XLAHX-*6 (5)	250	Eng	55			328960-1X	Furnished								
442XQAHX-*6 (5)	225	Eng	59			328960-1X	Furnished								
442XRAHX-*6 (5)	225	Eng	68			328960-1X	Furnished								
442XSAHX-*6 (5)	200	Eng	81			328960-1X	Furnished								
442XUAHX-*6 (5)	195	Eng	97			328960-1X	Furnished								
442XWAHX-*6 (5)	175	Eng	114			328960-1X	Furnished								
442XXAHX-*6 (5)	140	Eng	135			328960-1X	Furnished								
ONE SPEED - TWO GEAR - POWERSHIFT (AIR)															
236XDAHX-*6 (5)	250	Eng	45			328960-1X	Furnished								
236XKAHX-*6 (5)	250	Eng	57			328960-1X	Furnished								
236XQAHX-*6 (5)	250	Eng	77			328960-1X	Furnished								
236XUAHX-*6 (5)	225	Eng	88			328960-1X	Furnished								
ONE SPEED - FORWARD & REVERSE															
340XFAHX-*4 (6)	200	Eng	37	39	7-A-140(P)(2)	328960-1X	Furnished								
340XFAHX-*5 (6)	200	Eng	37	39	7-A-140(P)(2)	328960-1X	Furnished								
352XSAHX-*6 (5)	140	Eng	82	107		328960-1X	Furnished								
ONE SPEED - DUAL SHAFT															
452XSAHX-*6 (5)	140	Eng	82			328960-1X	Furnished								

(1) Gear and Shaft Kit No. KXA-2-P-565
(2) Filler block furnished with P.T.O.
(3) Input Gear Part No. 5-P-1077
(4) Input Gear Part No. 5-P-1364
(5) Input Gear Part No. 5-P-1004
(6) Input Gear Part No. 5-P-581

MBG-5F

LEFT SIDE ONLY

TRANSMISSION GEAR DATA:
L.H. 8-Bolt Opening Gear NON-STANDARD of Centerline
37 Teeth - R.H. HELIX

PITCH LINE TO APERTURE FACE:
1.1460" (29.1080MM)

Caution: Application Approval Required for P.T.O. Output Shaft Speeds Above 2500 R.P.M.

LEFT Side P.T.O. Model	Inter. Torq.	Dir. Rot.	Engine % Hi	Engine % Rev	Filler Block	Adapter Assy.	Stud Kit	P.T.O. Model	Inter. Torq.	Dir. Rot.	Engine % Hi	Engine % Rev	Filler Block	Adapter Assy.	Stud Kit
ONE SPEED - SINGLE GEAR - MECHANICAL SHIFT															
100XRAHX-*4 (1)	125	Opp	85			328960-2X	Furnished								
ONE SPEED - TWO GEAR - MECHANICAL SHIFT															
221XCAHX-*6	250	Eng	38		7-A-032(P)(2)	328960-2X	Furnished								
221XEAHX-*6	250	Eng	44			328960-2X	Furnished								
221XLAHX-*6	200	Eng	59			328960-2X	Furnished								
221XPAHX-*6	200	Eng	71			328960-2X	Furnished								
442XFAHX-*6 (3)	250	Eng	53			328960-2X	Furnished								
442XHAHX-*6 (4)	250	Eng	61			328960-2X	Furnished								
442XLAHX-*6 (5)	250	Eng	68			328960-2X	Furnished								
442XQAHX-*6 (5)	225	Eng	74			328960-2X	Furnished								
442XRAHX-*6 (5)	225	Eng	85			328960-2X	Furnished								
442XSAHX-*6 (5)	200	Eng	102			328960-2X	Furnished								
442XUAHX-*6 (5)	195	Eng	121			328960-2X	Furnished								
442XWAHX-*6 (5)	175	Eng	142			328960-2X	Furnished								
442XXAHX-*6 (5)	140	Eng	168			328960-2X	Furnished								
ONE SPEED - TWO GEAR - POWERSHIFT (AIR)															
236XDAHX-*6 (5)	250	Eng	55			328960-2X	Furnished								
236XKAHX-*6 (5)	250	Eng	71			328960-2X	Furnished								
236XQAHX-*6 (5)	250	Eng	95			328960-2X	Furnished								
236XUAHX-*6 (5)	225	Eng	109			328960-2X	Furnished								
ONE SPEED - FORWARD & REVERSE															
340XFAHX-*4 (6)	200	Eng	46	48	7-A-140(P)(2)	328960-2X	Furnished								
352XSAHX-*6 (5)	140	Eng	103	133		328960-2X	Furnished								
ONE SPEED - DUAL SHAFT															
452XSAHX-*6 (5)	140	Eng	103			328960-2X	Furnished								

(1) Gear and Shaft Kit No. KXA-2-P-565
(2) Filler block furnished with P.T.O.
(3) Input Gear Part No. 5-P-1077
(4) Input Gear Part No. 5-P-1364
(5) Input Gear Part No. 5-P-1004
(6) Input Gear Part No. 5-P-581

MLH-5G

LEFT SIDE ONLY

TRANSMISSION GEAR DATA:
L.H. 8-Bolt Opening Gear NON-STANDARD of Centerline
40 Teeth - R.H. HELIX

PITCH LINE TO APERTURE FACE:
2.3040" (58.5200MM)

Caution: Application Approval Required for P.T.O. Output Shaft Speeds Above 2500 R.P.M.

LEFT Side P.T.O. Model	Inter. Torq.	Dir. Rot.	Engine % Hi	Engine % Rev	Filler Block	Adapter Assy.	Stud Kit	P.T.O. Model	Inter. Torq.	Dir. Rot.	Engine % Hi	Engine % Rev	Filler Block	Adapter Assy.	Stud Kit
ONE SPEED - SINGLE GEAR - MECHANICAL SHIFT															
100XRAHX-*3 (1)	125	Opp	97			328983X	Furnished								
ONE SPEED - TWO GEAR - MECHANICAL SHIFT															
221XCAHX-*5	250	Eng	43		7-A-032(P)(2)	328983X	Furnished								
221XEAHX-*5	250	Eng	50			328983X	Furnished								
221XLAHX-*5	200	Eng	67			328983X	Furnished								
221XPAHX-*5	200	Eng	81			328983X	Furnished								
442XFAHX-*5 (3)	250	Eng	60			328983X	Furnished								
442XHAHX-*5 (4)	250	Eng	70			328983X	Furnished								
442XLAHX-*5 (5)	250	Eng	78			328983X	Furnished								
442XQAHX-*5 (5)	225	Eng	84			328983X	Furnished								
442XRAHX-*5 (5)	225	Eng	97			328983X	Furnished								
442XSAHX-*5 (5)	200	Eng	115			328983X	Furnished								
442XUAHX-*5 (5)	195	Eng	137			328983X	Furnished								
442XWAHX-*5 (5)	175	Eng	162			328983X	Furnished								
442XXAHX-*5 (5)	140	Eng	191			328983X	Furnished								
ONE SPEED - TWO GEAR - POWERSHIFT (AIR)															
236XDAHX-*5 (5)	250	Eng	63			328983X	Furnished								
236XKAHX-*5 (5)	250	Eng	81			328983X	Furnished								
236XQAHX-*5 (5)	250	Eng	109			328983X	Furnished								
236XUAHX-*5 (5)	225	Eng	124			328983X	Furnished								
ONE SPEED - FORWARD & REVERSE															
340XFAHX-*5 (6)	200	Eng	52	55	7-A-140(P)(2)	328983X	Furnished								
352XSAHX-*5 (5)	140	Eng	117	151		328983X	Furnished								
ONE SPEED - DUAL SHAFT															
452XSAHX-*5 (5)	140	Eng	117			328983X	Furnished								

(1) Gear and Shaft Kit No. KXA-2-P-565
(2) Filler block furnished with P.T.O.
(3) Input Gear Part No. 5-P-1077
(4) Input Gear Part No. 5-P-1364
(5) Input Gear Part No. 5-P-1004
(6) Input Gear Part No. 5-P-581

MLD-6E

LEFT SIDE ONLY

TRANSMISSION GEAR DATA:
L.H. 6-Bolt Opening Gear FORWARD of Centerline
34 Teeth - R.H. HELIX

PITCH LINE TO APERTURE FACE:
3.0650" (77.8510MM)

Caution: Application Approval Required for P.T.O. Output Shaft Speeds Above 2500 R.P.M.

LEFT Side P.T.O. Model	Inter. Torq.	Dir. Rot.	Engine % Hi	Engine % Rev	Filler Block	Adapter Assy.	Stud Kit	P.T.O. Model	Inter. Torq.	Dir. Rot.	Engine % Hi	Engine % Rev	Filler Block	Adapter Assy.	Stud Kit
ONE SPEED - SINGLE GEAR - MECHANICAL SHIFT															
100XRAHX-*4 (1)	125	Opp	79		23-P-65-1(T)	328985X	Furnished								
ONE SPEED - TWO GEAR - MECHANICAL SHIFT															
221XCAHX-*6	250	Eng	35		7-A-032(P)(2) 23-P-65-1(T)	328985X	Furnished								
221XEAHX-*6	250	Eng	40		23-P-65-1(T)	328985X	Furnished								
221XLAHX-*6	200	Eng	54		23-P-65-1(T)	328985X	Furnished								
221XPAHX-*6	200	Eng	66		23-P-65-1(T)	328985X	Furnished								
442XFAHX-*6 (3)	250	Eng	49		23-P-65-1(T)	328985X	Furnished								
442XHAHX-*6 (4)	250	Eng	57		23-P-65-1(T)	328985X	Furnished								
442XLAHX-*6 (5)	250	Eng	63		23-P-65-1(T)	328985X	Furnished								
442XQAHX-*6 (5)	225	Eng	68		23-P-65-1(T)	328985X	Furnished								
442XRAHX-*6 (5)	225	Eng	79		23-P-65-1(T)	328985X	Furnished								
442XSAHX-*6 (5)	200	Eng	94		23-P-65-1(T)	328985X	Furnished								
442XUAHX-*6 (5)	195	Eng	112		23-P-65-1(T)	328985X	Furnished								
442XWAHX-*6 (5)	175	Eng	131		23-P-65-1(T)	328985X	Furnished								
442XXAHX-*6 (5)	140	Eng	155		23-P-65-1(T)	328985X	Furnished								
ONE SPEED - TWO GEAR - POWERSHIFT (AIR)															
236XDAHX-*6 (5)	250	Eng	51		23-P-65-1(T)	328985X	Furnished								
236XKAHX-*6 (5)	250	Eng	66		23-P-65-1(T)	328985X	Furnished								
236XQAHX-*6 (5)	250	Eng	88		23-P-65-1(T)	328985X	Furnished								
236XUAHX-*6 (5)	225	Eng	101		23-P-65-1(T)	328985X	Furnished								
ONE SPEED - FORWARD & REVERSE															
340XFAHX-*4 (6)	200	Eng	43	45	7-A-140(P)(2) 23-P-65-1(T)	328985X	Furnished								
352XSAHX-*6 (5)	140	Eng	95	123	23-P-65-1(T)	328985X	Furnished								
ONE SPEED - DUAL SHAFT															
452XSAHX-*6 (5)	140	Eng	95		23-P-65-1(T)	328985X	Furnished								

NOTE: Adapter 328985X is required to mount a P.T.O. on this transmission, and may be mounted with the S.A.E. 6-Bolt pad in either direction.

(1) Gear and Shaft Kit No. KXA-2-P-565
(2) Filler block furnished with P.T.O.
(3) Input Gear Part No. 5-P-1077
(4) Input Gear Part No. 5-P-1364
(5) Input Gear Part No. 5-P-1004
(6) Input Gear Part No. 5-P-581

MLD-6C

LEFT SIDE ONLY

TRANSMISSION GEAR DATA:
L.H. 6-Bolt Opening Gear FORWARD of Centerline

33 Teeth - R.H. HELIX

PITCH LINE TO APERTURE FACE:
3.1412" (79.7864MM)

Caution: Application Approval Required for P.T.O. Output Shaft Speeds Above 2500 R.P.M.

LEFT Side P.T.O. Model	Inter. Torq.	Dir. Rot.	Engine % Hi	Engine % Rev	Filler Block	Adapter Assy.	Stud Kit	P.T.O. Model	Inter. Torq.	Dir. Rot.	Engine % Hi	Engine % Rev	Filler Block	Adapter Assy.	Stud Kit
ONE SPEED - SINGLE GEAR - MECHANICAL SHIFT															
100XRAHX-*4 (1)	125	Opp	82			328985X	Furnished								
ONE SPEED - TWO GEAR - MECHANICAL SHIFT															
221XCAHX-*6	250	Eng	36		7-A-032(P)(2)	328985X	Furnished								
221XEAHX-*6	250	Eng	42			328985X	Furnished								
221XLAHX-*6	200	Eng	56			328985X	Furnished								
221XPAHX-*6	200	Eng	68			328985X	Furnished								
442XFAHX-*6 (3)	250	Eng	51			328985X	Furnished								
442XHAHX-*6 (4)	250	Eng	59			328985X	Furnished								
442XLAHX-*6 (5)	250	Eng	66			328985X	Furnished								
442XQAHX-*6 (5)	225	Eng	71			328985X	Furnished								
442XRAHX-*6 (5)	225	Eng	82			328985X	Furnished								
442XSAHX-*6 (5)	200	Eng	97			328985X	Furnished								
442XUAHX-*6 (5)	195	Eng	116			328985X	Furnished								
442XWAHX-*6 (5)	175	Eng	136			328985X	Furnished								
442XXAHX-*6 (5)	140	Eng	161			328985X	Furnished								
ONE SPEED - TWO GEAR - POWERSHIFT (AIR)															
236XDAHX-*6 (5)	250	Eng	53			328985X	Furnished								
236XKAHX-*6 (5)	250	Eng	68			328985X	Furnished								
236XQAHX-*6 (5)	250	Eng	91			328985X	Furnished								
236XUAHX-*6 (5)	225	Eng	105			328985X	Furnished								
ONE SPEED - FORWARD & REVERSE															
340XFAHX-*4 (6)	200	Eng	44	46	7-A-140(P)(2)	328985X	Furnished								
352XSAHX-*6 (5)	140	Eng	99	128		328985X	Furnished								
ONE SPEED - DUAL SHAFT															
452XSAHX-*6 (5)	140	Eng	99			328985X	Furnished								

NOTE: Adapter 328985X is required to mount a P.T.O. on this transmission, and may be mounted with the S.A.E. 6-Bolt pad in either direction.

(1) Gear and Shaft Kit No. KXA-2-P-565
(2) Filler block furnished with P.T.O.
(3) Input Gear Part No. 5-P-1077
(4) Input Gear Part No. 5-P-1364
(5) Input Gear Part No. 5-P-1004
(6) Input Gear Part No. 5-P-581

Parker Hannifin Corporation
Chelsea Products Division
Olive Branch, MS 38654 USA

MBG-5C

LEFT SIDE ONLY

TRANSMISSION GEAR DATA:
L.H. 8-Bolt Opening Gear NON-STANDARD of Centerline
34 Teeth - R.H. HELIX

PITCH LINE TO APERTURE FACE:
3.1550" (80.1370MM)

Caution: Application Approval Required for P.T.O. Output Shaft Speeds Above 2500 R.P.M.

LEFT Side P.T.O. Model	Inter. Torq.	Dir. Rot.	Engine % Hi	Engine % Rev	Filler Block	Adapter Assy.	Stud Kit	P.T.O. Model	Inter. Torq.	Dir. Rot.	Engine % Hi	Engine % Rev	Filler Block	Adapter Assy.	Stud Kit
ONE SPEED - SINGLE GEAR - MECHANICAL SHIFT															
100XRAHX-*4 (1)	125	Opp	66			329017X	Furnished								
ONE SPEED - TWO GEAR - MECHANICAL SHIFT															
221XCAHX-*6 (2)	250	Eng	30			329017X	Furnished								
221XEAHX-*6 (3)	250	Eng	34			329017X	Furnished								
221XLAHX-*6 (3)	200	Eng	46			329017X	Furnished								
221XPAHX-*6 (3)	200	Eng	55			329017X	Furnished								
442XFAHX-*6 (4)	250	Eng	41			329017X	Furnished								
442XHAHX-*6 (5)	250	Eng	48			329017X	Furnished								
442XLAHX-*6 (6)	250	Eng	53			329017X	Furnished								
442XQAHX-*6 (6)	225	Eng	57			329017X	Furnished								
442XRAHX-*6 (6)	225	Eng	66			329017X	Furnished								
442XSAHX-*6 (6)	200	Eng	79			329017X	Furnished								
442XUAHX-*6 (6)	195	Eng	94			329017X	Furnished								
442XWAHX-*6 (6)	175	Eng	111			329017X	Furnished								
442XXAHX-*6 (6)	140	Eng	131			329017X	Furnished								
ONE SPEED - TWO GEAR - POWERSHIFT (AIR)															
236XDAHX-*6 (6)	250	Eng	43			329017X	Furnished								
236XKAHX-*6 (6)	250	Eng	55			329017X	Furnished								
236XQAHX-*6 (6)	250	Eng	75			329017X	Furnished								
236XUAHX-*6 (6)	225	Eng	85			329017X	Furnished								
ONE SPEED - FORWARD & REVERSE															
340XFAHX-*4 (7)	200	Eng	36	38	7-4-140(P) 7-A-140 (8)	329017X	Furnished								
352XSAHX-*6 (6)	140	Eng	80	104		329017X	Furnished								
ONE SPEED - DUAL SHAFT															
452XSAHX-*6 (6)	140	Eng	80			329017X	Furnished								

NOTE: Adapter 329017X is required to convert the non-standard opening to a standard S.A.E. 6-bolt opening.

(1) Gear and Shaft Kit No. KXA-2-P-565
(2) Input Gear Part No. 5-P-319
(3) Input Gear Part No. 5-P-202
(4) Input Gear Part No. 5-P-1077
(5) Input Gear Part No. 5-P-1364
(6) Input Gear Part No. 5-P-1004
(7) Input Gear Part No. 5-P-581
(8) Filler block furnished with P.T.O.

Parker Hannifin Corporation
Chelsea Products Division
Olive Branch, MS 38654 USA

MBD-5A
MBG-5A

LEFT SIDE ONLY

TRANSMISSION GEAR DATA:
L.H. 8-Bolt Opening Gear NON-STANDARD of Centerline
34 Teeth - R.H. HELIX

PITCH LINE TO APERTURE FACE:
3.1550" (80.1370MM)

Caution: Application Approval Required for P.T.O. Output Shaft Speeds Above 2500 R.P.M.

LEFT Side P.T.O. Model	Inter. Torq.	Dir. Rot.	Engine % Hi	Engine % Rev	Filler Block	Adapter Assy.	Stud Kit	P.T.O. Model	Inter. Torq.	Dir. Rot.	Engine % Hi	Engine % Rev	Filler Block	Adapter Assy.	Stud Kit
ONE SPEED - SINGLE GEAR - MECHANICAL SHIFT															
100XRAHX-*4 (1)	125	Opp	72			329017-1X	Furnished								
ONE SPEED - TWO GEAR - MECHANICAL SHIFT															
221XCAHX-*6 (2)	250	Eng	32			329017-1X	Furnished								
221XEAHX-*6 (3)	250	Eng	37			329017-1X	Furnished								
221XLAHX-*6 (3)	200	Eng	50			329017-1X	Furnished								
221XPAHX-*6 (3)	200	Eng	60			329017-1X	Furnished								
442XFAHX-*6 (4)	250	Eng	44			329017-1X	Furnished								
442XHAHX-*6 (5)	250	Eng	51			329017-1X	Furnished								
442XLAHX-*6 (6)	250	Eng	57			329017-1X	Furnished								
442XQAHX-*6 (6)	225	Eng	62			329017-1X	Furnished								
442XRAHX-*6 (6)	225	Eng	72			329017-1X	Furnished								
442XSAHX-*6 (6)	200	Eng	85			329017-1X	Furnished								
442XUAHX-*6 (6)	195	Eng	102			329017-1X	Furnished								
442XWAHX-*6 (6)	175	Eng	120			329017-1X	Furnished								
442XXAHX-*6 (6)	140	Eng	141			329017-1X	Furnished								
ONE SPEED - TWO GEAR - POWERSHIFT (AIR)															
236XDAHX-*6 (6)	250	Eng	46			329017-1X	Furnished								
236XKAHX-*6 (6)	250	Eng	60			329017-1X	Furnished								
236XQAHX-*6 (6)	250	Eng	81			329017-1X	Furnished								
236XUAHX-*6 (6)	225	Eng	92			329017-1X	Furnished								
ONE SPEED - FORWARD & REVERSE															
340XFAHX-*4 (7)	200	Eng	39	41	7-A-140 (8)	329017-1X	Furnished								
352XSAHX-*6 (6)	140	Eng	86	112		329017-1X	Furnished								
ONE SPEED - DUAL SHAFT															
452XSAHX-*6 (6)	140	Eng	86			329017-1X	Furnished								

NOTE: Adapter 329017X is required to convert the non-standard opening to a stanadard S.A.E. 6 bolt opening.

(1) Gear and Shaft Kit No. KXA-2-P-565
(2) Input Gear Part No. 5-P-319
(3) Input Gear Part No. 5-P-202
(4) Input Gear Part No. 5-P-1077
(5) Input Gear Part No. 5-P-1364
(6) Input Gear Part No. 5-P-1004
(7) Input Gear Part No. 5-P-581
(8) Filler block furnished with P.T.O.

ISUZU

LEFT SIDE ONLY

TRANSMISSION GEAR DATA:

L.H. 6-Bolt Opening Gear NON-STANDARD of Centerline

63 Teeth - SPUR

PITCH LINE TO APERTURE FACE:

1.2970" (32.9438MM)

Caution: Application Approval Required for P.T.O. Output Shaft Speeds Above 2500 R.P.M.

LEFT Side P.T.O. Model	Inter. Torq.	Dir. Rot.	Engine % Hi	Engine % Rev	Filler Block	Adapter Assy.	Stud Kit	P.T.O. Model	Inter. Torq.	Dir. Rot.	Engine % Hi	Engine % Rev	Filler Block	Adapter Assy.	Stud Kit
ONE SPEED - TWO GEAR - MECHANICAL SHIFT															
440JQFAX-*5 (1)	225	Eng	147				Furnished								
442JQFAX-*5 (1)	225	Eng	147				Furnished								
442JRFAX-*5 (1)	225	Eng	170				Furnished								
ONE SPEED - TWO GEAR - POWERSHIFT (HYDRAULIC)															
270JGFAP-*5 (2)	175	Eng	98				Furnished								

NOTE: One of two shift options should be used for the 440 series on this application: "B" for a special hydraulic shift cover, or "Z" for an E-Zshift cover.

NOTE: "B" shift option includes hydraulic shift cover 329191X for the 440 series and installation kit 329070X.

NOTE: 440 series speed with torque converter slip = 109%.

NOTE: 270 series speed with torque converter slip = 74%.

NOTE: As of 1995 model year there will be some Jatco Automatic transmissions with no P.T.O. drive gears. These should be labled with a sticker on the aperature cover which states "No PTO Drive Gear".

(1) Input Gear Part No. 5-P-894
(2) Input Gear Part No. 5-P-882

Parker Hannifin Corporation
Chelsea Products Division
Olive Branch, MS 38654 USA

MLD-6F

LEFT SIDE ONLY

TRANSMISSION GEAR DATA:
L.H. 6-Bolt Opening Gear FORWARD of Centerline
35 Teeth - R.H. HELIX

PITCH LINE TO APERTURE FACE:
2.9900" (75.9460MM)

Caution: Application Approval Required for P.T.O. Output Shaft Speeds Above 2500 R.P.M.

LEFT Side P.T.O. Model	Inter. Torq.	Dir. Rot.	Engine % Hi	Engine % Rev	Filler Block	Adapter Assy.	Stud Kit	P.T.O. Model	Inter. Torq.	Dir. Rot.	Engine % Hi	Engine % Rev	Filler Block	Adapter Assy.	Stud Kit
ONE SPEED - SINGLE GEAR - MECHANICAL SHIFT															
100XRAHX-*4 (1)	125	Opp	81		23-P-65-2(T)	328985X	Furnished								
ONE SPEED - TWO GEAR - MECHANICAL SHIFT															
221XCAHX-*6	250	Eng	36		7-A-032(P)(2) 23-P-65-2(T)	328985X	Furnished								
221XEAHX-*6	250	Eng	42		23-P-65-2(T)	328985X	Furnished								
221XLAHX-*6	200	Eng	56		23-P-65-2(T)	328985X	Furnished								
221XPAHX-*6	200	Eng	68		23-P-65-2(T)	328985X	Furnished								
442XFAHX-*6 (3)	250	Eng	50		23-P-65-2(T)	328985X	Furnished								
442XHAHX-*6 (4)	250	Eng	58		23-P-65-2(T)	328985X	Furnished								
442XLAHX-*6 (5)	250	Eng	65		23-P-65-2(T)	328985X	Furnished								
442XQAHX-*6 (5)	225	Eng	70		23-P-65-2(T)	328985X	Furnished								
442XRAHX-*6 (5)	225	Eng	81		23-P-65-2(T)	328985X	Furnished								
442XSAHX-*6 (5)	200	Eng	96		23-P-65-2(T)	328985X	Furnished								
442XUAHX-*6 (5)	195	Eng	115		23-P-65-2(T)	328985X	Furnished								
442XWAHX-*6 (5)	175	Eng	135		23-P-65-2(T)	328985X	Furnished								
442XXAHX-*6 (5)	140	Eng	160		23-P-65-2(T)	328985X	Furnished								
ONE SPEED - TWO GEAR - POWERSHIFT (AIR)															
236XDAHX-*6 (5)	250	Eng	53		23-P-65-2(T)	328985X	Furnished								
236XKAHX-*6 (5)	250	Eng	67		23-P-65-2(T)	328985X	Furnished								
236XQAHX-*6 (5)	250	Eng	91		23-P-65-2(T)	328985X	Furnished								
236XUAHX-*6 (5)	225	Eng	104		23-P-65-2(T)	328985X	Furnished								
ONE SPEED - FORWARD & REVERSE															
340XFAHX-*4 (6)	200	Eng	44	46	7-A-140(P)(2) 23-P-62-2(T)	328985X	Furnished								
352XSAHX-*6 (5)	140	Eng	98	126	23-P-65-2(T)	328985X	Furnished								
ONE SPEED - DUAL SHAFT															
452XSAHX-*6 (5)	140	Eng	98		23-P-65-2(T)	328985X	Furnished								

NOTE: Adapter 328985X is required to mount most P.T.O.s on this transmission, and may be mounted with the 6-Bolt pad in either direction.

(1) Gear and Shaft Kit No. KXA-2-P-565
(2) Filler block furnished with P.T.O.
(3) Input Gear Part No. 5-P-1077
(4) Input Gear Part No. 5-P-1364
(5) Input Gear Part No. 5-P-1004
(6) Input Gear Part No. 5-P-581

Parker Hannifin Corporation
Chelsea Products Division
Olive Branch, MS 38654 USA

MLD-6Q

LEFT SIDE ONLY

TRANSMISSION GEAR DATA:

L.H. 8-Bolt Opening Gear NON-STANDARD of Centerline

36 Teeth - R.H. HELIX

PITCH LINE TO APERTURE FACE:

2.7150 (68.9610MM)

Caution: Application Approval Required for P.T.O. Output Shaft Speeds Above 2500 R.P.M.

LEFT Side P.T.O. Model	Inter. Torq.	Dir. Rot.	Engine % Hi	Engine % Rev	Filler Block	Adapter Assy.	Stud Kit	P.T.O. Model	Inter. Torq.	Dir. Rot.	Engine % Hi	Engine % Rev	Filler Block	Adapter Assy.	Stud Kit
ONE SPEED - SINGLE GEAR - MECHANICAL SHIFT															
100XRAHX-*4 (1)	125	Opp	101		329308X	328985X	328170-202X								
ONE SPEED - TWO GEAR - MECHANICAL SHIFT															
221XCAHX-*6	250	Eng	45		7-A-032(P)(2) 329308X(T)	328985X	328170-202X								
221XEAHX-*6	250	Eng	52		329308X	328985X	328170-202X								
221XLAHX-*6	200	Eng	70		329308X	328985X	328170-202X								
221XPAHX-*6	200	Eng	85		329308X	328985X	328170-202X								
442XFAHX-*6 (3)	250	Eng	63		329308X	328985X	328170-202X								
442XHAHX-*6 (4)	250	Eng	73		329308X	328985X	328170-202X								
442XLAHX-*6 (5)	250	Eng	81		329308X	328985X	328170-202X								
442XQAHX-*6 (5)	225	Eng	88		329308X	328985X	328170-202X								
442XRAHX-*6 (5)	225	Eng	101		329308X	328985X	328170-202X								
442XSAHX-*6 (5)	200	Eng	121		329308X	328985X	328170-202X								
442XUAHX-*6 (5)	195	Eng	144		329308X	328985X	328170-202X								
442XWAHX-*6 (5)	175	Eng	169		329308X	328985X	328170-202X								
442XXAHX-*6 (5)	140	Eng	200		329308X	328985X	328170-202X								
ONE SPEED - TWO GEAR - POWERSHIFT (AIR)															
236XDAHX-*6 (5)	250	Eng	66		329308X	328985X	328170-202X								
236XKAHX-*6 (5)	250	Eng	84		329308X	328985X	328170-202X								
236XQAHX-*6 (5)	250	Eng	113		329308X	328985X	328170-202X								
236XUAHX-*6 (5)	225	Eng	130		329308X	328985X	328170-202X								
ONE SPEED - FORWARD & REVERSE															
340XFAHX-*4 (6)	200	Eng	55	58	7-A-140(P)(2) 329308X(T)	328985X	328170-202X								
352XSAHX-*6 (5)	140	Eng	122	158	329308X	328985X	328170-202X								
ONE SPEED - DUAL SHAFT															
452XSAHX-*6 (5)	140	Eng	122		329308X	328985X	328170-202X								

NOTE: Adapter 328985X is required to mount most P.T.O.s on this transmission, and may be mounted with the S.A.E. 6-Bolt pad in either direction.

(1) Gear and Shaft Kit No. KXA-2-P-565
(2) Filler block furnished with P.T.O.
(3) Input Gear Part No. 5-P-1077
(4) Input Gear Part No. 5-P-1364
(5) Input Gear Part No. 5-P-1004
(6) Input Gear Part No. 5-P-581

Parker Hannifin Corporation
Chelsea Products Division
Olive Branch, MS 38654 USA

A450-43LE
450-43LE

LEFT SIDE ONLY

TRANSMISSION GEAR DATA:
L.H. 6-Bolt Opening Gear FORWARD of Centerline
58 Teeth - SPUR

PITCH LINE TO APERTURE FACE:
1.0880" (27.6352MM)

Caution: Application Approval Required for P.T.O. Output Shaft Speeds Above 2500 R.P.M.

LEFT Side P.T.O. Model	Inter. Torq.	Dir. Rot.	Engine % Hi	Engine % Rev	Filler Block	Adapter Assy.	Stud Kit	P.T.O. Model	Inter. Torq.	Dir. Rot.	Engine % Hi	Engine % Rev	Filler Block	Adapter Assy.	Stud Kit
ONE SPEED - TWO GEAR - POWERSHIFT (HYDRAULIC)															
270AAKUP-*5 (1)	210	Eng	55				Furnished								
270ABKUP-*5 (2)	163	Eng	71				Furnished								
270ADKUP-*5 (3)	139	Eng	82				Furnished								
270AKKUP-*5 (4)	104	Eng	111				Furnished								
270AQKUP-*5 (5)	78	Eng	148				Furnished								

NOTE: When ordering the 270 "A", the hose kit 329246X and metric stud kit 328170-205X is furnished with the P.T.O. The hose kit and metric stud kit are required for completing the 270 Series installation. The 329246X kit supplies hoses for the low pressure lube, high pressure oil, and drain back oil.

NOTE: The torque ratings shown for the 270 Series are based on the maximum allowable torque capacity of the P.T.O. drive gear in the transmission.

NOTE: The P.T.O.s shown on this application page will fit Isuzu NQR model trucks with serial number X7901741 and later only.

NOTE: The P.T.O.s shown on this application page will fit Isuzu NPR model trucks with wheel bases of 109" or 132" and a serial number of X7006763 and later.

NOTE: The P.T.O.s shown on this application page will also fit the same NPR model trucks with wheel bases of 150" and 176" after August of 1998 and serial number of X7006763 and later.

NOTE: The serial number is the last eight digits found on the VIN plate which is located in the cab behind the driver.

(1) Input Gear Part No. 5-P-1353
(2) Input Gear Part No. 5-P-1354
(3) Input Gear Part No. 5-P-1355
(4) Input Gear Part No. 5-P-1356
(5) Input Gear Part No. 5-P-1359

Parker Hannifin Corporation
Chelsea Products Division
Olive Branch, MS 38654 USA

MBP-6P

LEFT SIDE ONLY

TRANSMISSION GEAR DATA:
L.H. 8-Bolt Opening Gear CENTER of Centerline
28 Teeth - R.H. HELIX

PITCH LINE TO APERTURE FACE:
1.8560" (47.1424MM)

Caution: Application Approval Required for P.T.O. Output Shaft Speeds Above 2500 R.P.M.

ONE SPEED - TWO GEAR - MECHANICAL SHIFT

LEFT Side P.T.O. Model	Inter. Torq.	Dir. Rot.	Engine % Hi	Engine % Rev	Filler Block	Adapter Assy.	Stud Kit	P.T.O. Model	Inter. Torq.	Dir. Rot.	Engine % Hi	Engine % Rev	Filler Block	Adapter Assy.	Stud Kit
447XQEVX-*6 (1)	225	Eng	36			329244X	Furnished								
447XREVX-*6 (2)	225	Eng	42			329244X	Furnished								
447XSJXX-*6 (3)	200	Eng	50			329244X	Furnished								
447XUJXX-*6 (4)	195	Eng	60			329244X	Furnished								

NOTE: This is a non-standard 8 bolt opening. The 329244X adapter converts the opening to a standard SAE 6 bolt opening. The gears in the adapter are 43-P-162 and 43-P-163.

NOTE: The old 447XSEVX with a 5-P-1206, the 447XUEVX with a 5-P-1207, and the 447XWEVX with a 5-P-1208, will not mount on this transmission due to interference between the hub of the P.T.O. input gear and the outside diameter of the adapter gear 43-P-163.

(1) Input Gear Part No. 5-P-1205
(2) Input Gear Part No. 5-P-1219
(3) Input Gear Part No. 5-P-1270
(4) Input Gear Part No. 5-P-1271

MZZ-6U

LEFT SIDE ONLY

TRANSMISSION GEAR DATA:
L.H. 8-Bolt Opening Gear FORWARD of Centerline
37 Teeth - R.H. HELIX

PITCH LINE TO APERTURE FACE:
1.2850" (32.6390MM)

Caution: Application Approval Required for P.T.O. Output Shaft Speeds Above 2500 R.P.M.

LEFT Side P.T.O. Model	Inter. Torq.	Dir. Rot.	Engine % Hi	Engine % Rev	Filler Block	Adapter Assy.	Stud Kit	P.T.O. Model	Inter. Torq.	Dir. Rot.	Engine % Hi	Engine % Rev	Filler Block	Adapter Assy.	Stud Kit
ONE SPEED - SINGLE GEAR - MECHANICAL SHIFT															
100XRAHX-*4 (1)	125	Opp	67			328960-3X	Furnished								
ONE SPEED - TWO GEAR - MECHANICAL SHIFT															
442XFAHX-*6 (2)	250	Eng	42			328960-3X	Furnished								
442XHAHX-*6 (3)	250	Eng	49			328960-3X	Furnished								
442XLAHX-*6 (4)	250	Eng	54			328960-3X	Furnished								
442XQAHX-*6 (4)	225	Eng	58			328960-3X	Furnished								
442XRAHX-*6 (4)	225	Eng	68			328960-3X	Furnished								
442XSAHX-*6 (4)	200	Eng	80			328960-3X	Furnished								
442XUAHX-*6 (4)	195	Eng	96			328960-3X	Furnished								
442XWAHX-*6 (4)	175	Eng	113			328960-3X	Furnished								
442XXAHX-*6 (4)	140	Eng	127			328960-3X	Furnished								
ONE SPEED - FORWARD & REVERSE															
352XSAHX-*6 (4)	140	Eng	81	105		328960-3X	Furnished								
ONE SPEED - DUAL SHAFT															
452XSAHX-*6 (4)	140	Eng	81			328960-3X	Furnished								

(1) Gear and Shaft Kit No. KXA-2-P-565
(2) Input Gear Part No. 5-P-1077
(3) Input Gear Part No. 5-P-1364
(4) Input Gear Part No. 5-P-1004

Parker Hannifin Corporation
Chelsea Products Division
Olive Branch, MS 38654 USA

MACK

⚠ WARNING

FAILURE OR IMPROPER SELECTION OR IMPROPER USE OF THE PRODUCTS AND/OR SYSTEMS DESCRIBED HEREIN OR RELATED ITEMS CAN CAUSE DEATH, PERSONAL INJURY AND PROPERTY DAMAGE.

This document and other information from Parker Hannifin Corporation, its subsidiaries and authorized distributors provide product and/or system options for further investigation by users having technical expertise. It is important that you analyze all aspects of your application and review the information concerning the product or system in the current product catalog. Due to the variety of operating conditions and applications for these products or systems, the user, through its own analysis and testing, is solely responsible for making the final selection of the products and systems and assuring that all performance, safety and warning requirements of the application are met.

The products described herein, including without limitation, product features, specifications, designs, availability and pricing, are subject to change by Parker Hannifin Corporation and its subsidiaries at any time without notice.

Offer of Sale

The items described in this document are hereby offered for sale by Parker Hannifin Corporation, its subsidiaries or its authorized distributors. This offer and its acceptance are governed by the provisions stated in the "Offer of Sale".

© Copyright 2008, Parker Hannifin Corporation, All Rights Reserved

Parker Hannifin Corporation
Chelsea Products Division
Olive Branch, MS 38654 USA

Transmission Make and Model	P.T.O. Appl. Number	Number Forward Speeds	Teeth in P.T.O. Driver
D107	MAK-18	10	L37-R37
D1070	MAK-19	10	L37-R37
DX1070	MAK-16	6	L34-R34
DX1071	MAK-16	6	L34-R34
DX1078	MAK-16	6	L34-R34
DX10780	MAK-16	6	L34-R34
DX10781	MAK-16	6	L34-R34
G1070	MAK-19	7	L37-R37
QL7220	MAK-17	20	L38-R38
T1060 (Renault BDSL-181)	RNT-1	6	R33
T107	MAK-18	6	L37-R37
T1070	MAK-19	12	L37-R37
T1070-B	MAK-19	12	L37-R37
T1090 (Renault G-409-0)	RNT-6	9	R53
T1100 (Renault BDSL-2142R)	RNT-2	10	R53
T2050	MAK-25	5	L54-R54
T2050-C	MAK-29	5	L48-R48
T2060	MAK-25	6	L54-R54
T2060-A	MAK-30	6	L40-R40
T2060-C	MAK-29	6	L48-R48
T2070	MAK-25	7	L54-R54
T2070-A (Front Box)	MAK-25	7	L54-R54
T2070-A (Rear Box)	MAK-26	7	L49-R49
T2070-B (Front Box)	MAK-25	7	L54-R54
T2070-B (Rear Box)	MAK-26	7	L49-R49
T2070-C	MAK-29	7	L48-R48
T2070-D (Front Box)	MAK-29	7	L48-R48
T2070-D (Rear Box)	MAK-26	7	L49-R49
T2070-F	MAK-25	7	L54-R54
T2080	MAK-25	8	L54-R54
T2080-B (Front Box)	MAK-25	8	L54-R54
T2080-B (Rear Box)	MAK-26	8	L49-R49
T2080-C	MAK-29	8	L48-R48
T2080-D (Front Box)	MAK-29	8	L48-R48
T2080-D (Rear Box)	MAK-26	8	L49-R49
T2090	MAK-23	9	L54-R54

IMPORTANT: See Safety Information in Section I of the Chelsea Applications catalog HY25-3000/US.

Transmission P.T.O. Driver & Aperatures (Viewed from Rear of Transmission)

L-Left Side R-Right Side B-Bottom Side T-Top Side

For transmission not listed, contact your authorized Chelsea Distributor.

January 2008

Parker Hannifin Corporation
Chelsea Products Division
Olive Branch, MS 38654 USA

MACK TRANSMISSION INDEX

Transmission Make and Model	P.T.O. Appl. Number	Number Forward Speeds	Teeth in P.T.O. Driver
T2090-L	MAK-23	9	L54-R54
T2100	MAK-24	10	L54-R54
T2110-B (REAR BOX FOR T2110B)	MAK-31	11	L49-R49
T2110-B (FRONT BOX FOR T2110B)	MAK-24	11	L54-R54
T2130 (Front Box)	MAK-23	13	L54-R54
T2130 (Rear Box)	MAK-28	13	L49-R49
T2130-B (Front Box)	MAK-23	13	L54-R54
T2130-B (Rear Box)	MAK-28	12	L49-R49
T2180 (Front Box)	MAK-23	18	L54-R54
T2180 (Rear Box)	MAK-27	18	L49-R49
T2180-B (Front Box)	MAK-23	18	L54-R54
T2180-B (Rear Box)	MAK-27	18	L49-R49
T305	MAK-25	5	L54-R54
T306	MAK-25	6	L54-R54
T306G	MAK-30	6	L40-R40
T307	MAK-25	7	L54-R54
T307M (Front Box)	MAK-25	7	L54-R54
T307M (Rear Box)	MAK-26	7	L49-R49
T308	MAK-25	8	L54-R54
T308M (Front Box)	MAK-25	8	L54-R54
T308M (Rear Box)	MAK-26	8	L49-R49
T309	MAK-23	9	L54-R54
T309L	MAK-23	9	L54-R54
T309LR	MAK-23	9	L54-R54
T310 (T310 is a standard 10 speed with no rear box)	MAK-32	10	L53-R53
T310-M (Front Box)	MAK-32	13	L53-R53
T310-M (Rear Box)	MAK-27	13	L49-R49
T310-MLR (Front Box)	MAK-23	13	L54-R54
T310-MLR (Rear Box)	MAK-27	13	L49-R49
T310ME (Front box, same as T-310M except long output flange for rear mount PTO)	MAK-32	10	L53-R53
T310ME (Rear box, same as T310M except output flange extended for rear mount PTO)	MAK-27	10	L49-R49
T313L (Front Box)	MAK-23	13	L54-R54
T313L (Rear Box)	MAK-28	13	L49-R49
T313L21 (Front Box)	MAK-23	13	L54-R54
T313L21 (Rear Box)	MAK-28	13	L49-R49
T313LR (Front Box)	MAK-23	13	L54-R54
T313LR (Rear Box)	MAK-28	13	L49-R49

IMPORTANT: See Safety Information in Section 1 of the Chelsea Applications catalog HY25-3000/US.

Transmission P.T.O. Driver & Aperatures (Viewed from Rear of Transmission)

L-Left Side R-Right Side B-Bottom Side T-Top Side

For transmission not listed, contact your authorized Chelsea Distributor.

January 2008

Parker Hannifin Corporation
Chelsea Products Division
Olive Branch, MS 38654 USA

Transmission Make and Model	P.T.O. Appl. Number	Number Forward Speeds	Teeth in P.T.O. Driver
T313LR21 (Front Box)	MAK-23	13	L54-R54
T313LR21 (Rear Box)	MAK-28	13	L49-R49
T318L (Front Box)	MAK-23	18	L54-R54
T318L (Rear Box)	MAK-27	18	L49-R49
T318L21 (Front Box)	MAK-23	18	L54-R54
T318L21 (Rear Box)	MAK-27	18	L49-R49
T318LR (Front Box)	MAK-23	18	L54-R54
T318LR (Rear Box)	MAK-27	18	L49-R49
T318LR21 (Front Box)	MAK-23	18	L54-R54
T318LR21 (Rear Box)	MAK-27	18	L49-R49
TM308	MAK-33	8	L54-R54
TM308M (Rear Box)	MAK-26	8	L49-R49
TM308M (Front box)	MAK-23	8	L54-R54
TM309	MAK-33	9	L54-R54
TR720-7220	MAK-17	5	L38-R38
TRD7250	MAK-17	10	L38-R38
TRDL107	MAK-18	10	L37-R37
TRDL1070	MAK-19	10	L37-R37
TRDL720-7220	MAK-17	10	L38-R38
TRDLG1070	MAK-19	7	L37-R37
TRDX720-7220	MAK-17	10	L38-R38
TRDXL107	MAK-16	6	L34-R34
TRDXL1070	MAK-16	6	L34-R34
TRDXL1071	MAK-16	6	L34-R34
TRDXL1078	MAK-16	6	L34-R34
TRDXL10780	MAK-16	6	L34-R34
TRDXL10781	MAK-16	6	L34-R34
TRDXT720-7220	MAK-17	10	L38-R38
TRL107	MAK-22	5	L34-R34
TRL1076	MAK-16	5	L34-R34
TRL10760	MAK-20	5	L34-R34
TRL1078	MAK-16	5	L34-R34
TRL10780	MAK-20	5	L34-R34
TRQL7220	MAK-17	20	L38-R38
TRT720-7220	MAK-17	15	L38-R38
TRTL720-7220	MAK-17	15	L38-R38
TRTXL107	MAK-18	12	L37-R37



IMPORTANT: See Safety Information in Section I of the Chelsea Applications catalog HY25-3000/US.

Transmission P.T.O. Driver & Aperatures (Viewed from Rear of Transmission)

L-Left Side R-Right Side B-Bottom Side T-Top Side

For transmission not listed, contact your authorized Chelsea Distributor.

January 2008

Parker Hannifin Corporation
Chelsea Products Division
Olive Branch, MS 38654 USA

MACK TRANSMISSION INDEX

Transmission Make and Model	P.T.O. Appl. Number	Number Forward Speeds	Teeth in P.T.O. Driver
TRTXL1070	MAK-19	12	L37-R37
TRTXL1070-B	MAK-19	12	L37-R37
TRXL107	MAK-18	6	L37-R37
TRXL107-A	MAK-18	6	L37-R37
TRXL1070	MAK-21	6	L37-R37
TRXL1070-A	MAK-21	6	L37-R37
TRXL1071	MAK-18	6	L37-R37
TRXL1071-A	MAK-18	6	L37-R37
TRXL10710	MAK-21	6	L37-R37
TRXL1076	MAK-16	6	L34-R34
TX2060	MAK-25	7	L54-R54
X107	MAK-18	5	L37-R37
X107-A	MAK-18	6	L37-R37
X1070	MAK-21	6	L37-R37
X1070-A	MAK-21	6	L37-R37
X1071	MAK-18	5	L37-R37
X1071-A	MAK-18	6	L37-R37
X10710	MAK-21	6	L37-R37
X10710-A	MAK-21	6	L37-R37
X2060	MAK-25	7	L54-R54
107	MAK-22	5	L34-R34
1076	MAK-16	5	L34-R34
10760	MAK-20	5	L34-R34
1078	MAK-16	5	L34-R34
10780	MAK-20	5	L34-R34
2050	MAK-25	5	L54-R54
2060	MAK-25	6	L54-R54
2090	MAK-23	9	L54-R54
2100	MAK-24	10	L54-R54

IMPORTANT: See Safety Information in Section 1 of the Chelsea Applications catalog HY25-3000/US.

Transmission P.T.O. Driver & Aperatures (Viewed from Rear of Transmission)

L-Left Side R-Right Side B-Bottom Side T-Top Side

For transmission not listed, contact your authorized Chelsea Distributor.

January 2008

Parker Hannifin Corporation
Chelsea Products Division
Olive Branch, MS 38654 USA

1076	DX10780	TRDXL1078	TRXL1076
1078	DX10781	TRDXL10780	
DX1070	TRDXL107	TRDXL10781	
DX1071	TRDXL1070	TRL1076	
DX1078	TRDXL1071	TRL1078	

LEFT SIDE ONLY

TRANSMISSION GEAR DATA:
L.H. 8-Bolt Opening Gear FORWARD of Centerline

34 Teeth - SPUR

PITCH LINE TO APERTURE FACE:
.8050" (20.4500MM)

RIGHT SIDE ONLY

TRANSMISSION GEAR DATA:
R.H. 6-Bolt Opening Gear FORWARD of Centerline

34 Teeth - SPUR

PITCH LINE TO APERTURE FACE:
3.0850" (78.3600MM)

Caution: Application Approval Required for P.T.O. Output Shaft Speeds Above 2500 R.P.M.

LEFT Side P.T.O. Model	Inter. Torq.	Dir. Rot.	Engine % Hi	Engine % Rev	Filler Block	Adapter Assy.	Stud Kit	RIGHT Side P.T.O. Model	Inter. Torq.	Dir. Rot.	Engine % Hi	Engine % Rev	Filler Block	Adapter Assy.	Stud Kit
ONE SPEED - SINGLE GEAR - MECHANICAL SHIFT															
								100XRAHX-*3 (1)	125	Opp	72			328530-1X	328291-17X
ONE SPEED - TWO GEAR - MECHANICAL SHIFT															
221ZCAHX-*5	250	Opp	32		7-A-032 (2)	328564X	Furnished	221XCAHX-*3	250	Eng	32		7-A-032 (2)	328530-1X	328170-83X
221ZEAHX-*5	250	Opp	37			328564X	Furnished	221XEAHX-*3	250	Eng	37			328530-1X	328170-83X
221ZLAHX-*5	200	Opp	50			328564X	Furnished	221XLAHX-*3	200	Eng	50			328530-1X	328170-83X
221ZPAHX-*5	200	Opp	60			328564X	Furnished	221XPAHX-*3	200	Eng	60			328530-1X	328170-83X
442ZAAHX-*5 (3)	250	Opp	28			328564X	Furnished	442KFAHX-*3 (5)	250	Eng	45			328530-1X	7170-16X
442ZCAHX-*5 (4)	250	Opp	36			328564X	Furnished	442KHAHX-*3 (6)	250	Eng	52			328530-1X	7170-16X
442ZFAHX-*5 (5)	250	Opp	45			328564X	Furnished	442KLAHX-*3 (7)	250	Eng	58			328530-1X	7170-16X
442ZHAHX-*5 (6)	250	Opp	52			328564X	Furnished	442KQAHX-*3 (7)	225	Eng	62			328530-1X	7170-16X
442ZLAHX-*5 (7)	250	Opp	58			328564X	Furnished	442KRAHX-*3 (7)	225	Eng	72			328530-1X	7170-16X
442ZQAHX-*5 (7)	225	Opp	62			328564X	Furnished	442KSAHX-*3 (7)	200	Eng	86			328530-1X	7170-16X
442ZRAHX-*5 (7)	225	Opp	72			328564X	Furnished	442KUAHX-*3 (7)	195	Eng	102			328530-1X	7170-16X
442ZSAHX-*5 (7)	200	Opp	86			328564X	Furnished	442KWAHX-*3 (7)	175	Eng	121			328530-1X	7170-16X
442ZUAHX-*5 (7)	195	Opp	102			328564X	Furnished	442KXAHX-*3 (7)	140	Eng	143			328530-1X	7170-16X
442ZWAHX-*5 (7)	175	Opp	121			328564X	Furnished								
442ZXAHX-*5 (7)	140	Opp	143			328564X	Furnished								
489XAAHX-*5 (3)	250	Opp	28				Furnished								
489XCAHX-*5 (4)	250	Opp	36				Furnished								
489XFAHX-*5 (5)	250	Opp	45				Furnished								
489XHAHX-*5 (6)	250	Opp	52				Furnished								
489XLAHX-*5 (7)	250	Opp	58				Furnished								
489XQAHX-*5 (7)	225	Opp	62				Furnished								
489XRAHX-*5 (7)	225	Opp	72				Furnished								
489XSAHX-*5 (7)	200	Opp	86				Furnished								
489XUAHX-*5 (7)	195	Opp	102				Furnished								
489XWAHX-*5 (7)	175	Opp	121				Furnished								
489XXAHX-*5 (7)	140	Opp	143				Furnished								

Continued Next Page

CAUTION: Do not use geared adapters with 442 "A" and "C" ratios.

CAUTION: 660/680 Series: Applications above 1500 RPM, contact Chelsea Technical Service for approval.

NOTE: With gear selector lever in low range for the front portion of compound transmissions, multiply speeds shown by the factor listed for the transmission: TRDXL-107, DX-107 multiply by .595; TRDXL-1071, DX-1071 multiply by .350. This feature can cause insufficient P.T.O. speed, particularly in spreading applications.

NOTE: With gear selector lever in high range for the front portion of compound transmissions, multiply speed shown by the factor listed for the transmission: TRDXL-1070, DX-1070, TRDXL-10780, DX-10780 multiply by 1.62. This feature can cause excessive P.T.O. speeds.

NOTE: The AK & XK output flanges can not be used with the "A" & "C" ratios on the 489 Series PTOs due to mounting stud interference. Use a RA or RB rotatable flange for the XK and the RA for the AK flange.

NOTE: If Ordering the 230/231 Series with the Shaft Brake Option, order the "BA" Output for Automatic Transmissions and the "BD" Output for Manual Transmissions.

(1) Gear and Shaft Kit No. KXA-2-P-565
(2) Filler block furnished with P.T.O. but not required
(3) Input Gear Part No. 5-P-1280
(4) Input Gear Part No. 5-P-1287
(5) Input Gear Part No. 5-P-1077
(6) Input Gear Part No. 5-P-1364
(7) Input Gear Part No. 5-P-1004

1076	DX10780	TRDXL1078	TRXL1076
1078	DX10781	TRDXL10780	
DX1070	TRDXL107	TRDXL10781	
DX1071	TRDXL1070	TRL1076	
DX1078	TRDXL1071	TRL1078	

LEFT SIDE ONLY

TRANSMISSION GEAR DATA:
L.H. 8-Bolt Opening Gear FORWARD of Centerline
34 Teeth - SPUR

PITCH LINE TO APERTURE FACE:
.8050" (20.4500MM)

RIGHT SIDE ONLY

TRANSMISSION GEAR DATA:
R.H. 6-Bolt Opening Gear FORWARD of Centerline
34 Teeth - SPUR

PITCH LINE TO APERTURE FACE:
3.0850" (78.3600MM)

Caution: Application Approval Required for P.T.O. Output Shaft Speeds Above 2500 R.P.M.

LEFT Side P.T.O. Model	Inter. Torq.	Dir. Rot.	Engine % Hi	Engine % Rev	Filler Block	Adapter Assy.	Stud Kit	RIGHT Side P.T.O. Model	Inter. Torq.	Dir. Rot.	Engine % Hi	Engine % Rev	Filler Block	Adapter Assy.	Stud Kit
ONE SPEED - TWO GEAR - MECHANICAL SHIFT															
680XFAHX-*5 (8)	375	Opp	45				Furnished								
680XQAHX-*5 (9)	375	Opp	62				Furnished								
680XSAHX-*5 (10)	325	Opp	86				Furnished								
823XBAHX-*3 (11)	500	Opp	30				Furnished								
823XJAHX-*3 (12)	500	Opp	46				Furnished								
823XMAHX-*3 (13)	500	Opp	54				Furnished								
823XRAHX-*3 (14)	400	Opp	75				Furnished								
823XTKTX-*3 (15)	372	Opp	90		8-A-165		7170-116X								
880XBAHX-*3 (16)	500	Opp	30				Furnished								
880XDAHX-*3 (17)	500	Opp	36				Furnished								
880XGAHX-*3 (18)	500	Opp	39				Furnished								
880XJAHX-*3 (19)	500	Opp	46				Furnished								
880XMAHX-*3 (20)	500	Opp	54				Furnished								
880XQAHX-*3 (21)	450	Opp	64				Furnished								
880XRAHX-*3 (22)	400	Opp	75				Furnished								
880XTAHX-*3 (23)	350	Opp	96				Furnished								
ONE SPEED - TWO GEAR - POWERSHIFT (AIR)															
230XAAJX-*3	250	Opp	24		328481X		Furnished	236KDAHX-*3 (7)	250	Eng	47		328530-1X	7170-16X	
230XBAJX-*3	250	Opp	31		328481X		Furnished	236KKAHX-*3 (7)	250	Eng	60		328530-1X	7170-16X	
230XDAJX-*3	250	Opp	35		328481X		Furnished	236KQAHX-*3 (7)	250	Eng	81		328530-1X	7170-16X	
230XKAJX-*3	250	Opp	48		328481X		Furnished	236KUAHX-*3 (7)	225	Eng	93		328530-1X	7170-16X	
230XQAJX-*3	250	Opp	64		328481X		Furnished								
230XUAJX-*3	225	Opp	102		328481X		Furnished								
236ZDAHX-*5 (7)	250	Opp	47		328564X		Furnished								
236ZKAHX-*5 (7)	250	Opp	60		328564X		Furnished								
236ZQAHX-*5 (7)	250	Opp	81		328564X		Furnished								
236ZUAHX-*5 (7)	225	Opp	93		328564X		Furnished								
885XBAHX-*3 (16)	500	Opp	30				Furnished								

Continued Next Page

CAUTION: Do not use geared adapters with 442 "A" and "C" ratios.

CAUTION: 660/680 Series: Applications above 1500 RPM, contact Chelsea Technical Service for approval.

NOTE: With gear selector lever in low range for the front portion of compound transmissions, multiply speeds shown by the factor listed for the transmission: TRDXL-107, DX-107 multiply by .595; TRDXL-1071, DX-1071 multiply by .350. This feature can cause insufficient P.T.O. speed, particularly in spreading applications.

NOTE: With gear selector lever in high range for the front portion of compound transmissions, multiply speed shown by the factor listed for the transmission: TRDXL-1070, DX-1070, TRDXL-10780, DX-10780 multiply by 1.62. This feature can cause excessive P.T.O. speeds.

NOTE: The AK & XK output flanges can not be used with the "A" & "C" ratios on the 489 Series PTOs due to mounting stud interference. Use a RA or RB rotatable flange for the XK and the RA for the AK flange.

NOTE: If Ordering the 230/231 Series with the Shaft Brake Option, order the "BA" Output for Automatic Transmissions and the "BD" Output for Manual Transmissions.

(7) Input Gear Part No. 5-P-1004
(8) Input Gear Part No. 5-P-1242
(9) Input Gear Part No. 5-P-1246
(10) Input Gear Part No. 5-P-1322
(11) Input Gear Part No. 5-P-285
(12) Input Gear Part No. 5-P-325
(13) Input Gear Part No. 5-P-283
(14) Input Gear Part No. 5-P-721
(15) Input Gear Part No. 5-P-1395
(16) Input Gear Part No. 5-P-1100
(17) Input Gear Part No. 5-P-1101
(18) Input Gear Part No. 5-P-1135
(19) Input Gear Part No. 5-P-1102
(20) Input Gear Part No. 5-P-1103
(21) Input Gear Part No. 5-P-1385
(22) Input Gear Part No. 5-P-1104
(23) Input Gear Part No. 5-P-1105

1076	DX10780	TRDXL1078	TRXL1076
1078	DX10781	TRDXL10780	
DX1070	TRDXL107	TRDXL10781	
DX1071	TRDXL1070	TRL1076	
DX1078	TRDXL1071	TRL1078	

LEFT SIDE ONLY

TRANSMISSION GEAR DATA:
L.H. 8-Bolt Opening Gear FORWARD of Centerline
34 Teeth - SPUR

PITCH LINE TO APERTURE FACE:
.8050" (20.4500MM)

RIGHT SIDE ONLY

TRANSMISSION GEAR DATA:
R.H. 6-Bolt Opening Gear FORWARD of Centerline
34 Teeth - SPUR

PITCH LINE TO APERTURE FACE:
3.0850" (78.3600MM)

Caution: Application Approval Required for P.T.O. Output Shaft Speeds Above 2500 R.P.M.

LEFT Side P.T.O. Model	Inter. Torq.	Dir. Rot.	Engine % Hi	Engine % Rev	Filler Block	Adapter Assy.	Stud Kit	RIGHT Side P.T.O. Model	Inter. Torq.	Dir. Rot.	Engine % Hi	Engine % Rev	Filler Block	Adapter Assy.	Stud Kit
ONE SPEED - TWO GEAR - POWERSHIFT (AIR)															
885XGAHX-*3 (18)	500	Opp	39				Furnished								
885XJAHX-*3 (19)	500	Opp	46				Furnished								
885XMAHX-*3 (20)	500	Opp	54				Furnished								
ONE SPEED - FORWARD & REVERSE															
340SFAHX-*5 (24)	200	Opp	39	41	7-A-140 (2)	310778X	Furnished	340XFAHX-*5 (24)	200	Eng	39	41	7-A-140(P)(25)	328530-1X	7170-16X
352ZSAHX-*5 (7)	140	Opp	87	113		328564X	Furnished	352XSAHX-*3 (7)	140	Eng	87	113		328530-1X	7170-16X
863XBAHX-*5	500	Opp	30	38			Furnished								
ONE SPEED - DUAL SHAFT															
452ZSAHX-*3 (7)	140	Opp	87			328564X	Furnished	452XSAHX-*3 (7)	140	Eng	87			328530-1X	7170-16X
GEARED ADAPTERS															
628XAHX-3AH							Furnished								

CAUTION: Do not use geared adapters with 442 "A" and "C" ratios.

CAUTION: 660/680 Series: Applications above 1500 RPM, contact Chelsea Technical Service for approval.

NOTE: With gear selector lever in low range for the front portion of compound transmissions, multiply speeds shown by the factor listed for the transmission: TRDXL-107, DX-107 multiply by .595; TRDXL-1071, DX-1071 multiply by .350. This feature can cause insufficient P.T.O. speed, particularly in spreading applications.

NOTE: With gear selector lever in high range for the front portion of compound transmissions, multiply speed shown by the factor listed for the transmission: TRDXL-1070, DX-1070, TRDXL-10780, DX-10780 multiply by 1.62. This feature can cause excessive P.T.O. speeds.

NOTE: The AK & XK output flanges can not be used with the "A" & "C" ratios on the 489 Series PTOs due to mounting stud interference. Use a RA or RB rotatable flange for the XK and the RA for the AK flange.

NOTE: If Ordering the 230/231 Series with the Shaft Brake Option, order the "BA" Output for Automatic Transmissions and the "BD" Output for Manual Transmissions.

(2) Filler block furnished with P.T.O. but not required
(7) Input Gear Part No. 5-P-1004
(18) Input Gear Part No. 5-P-1135
(19) Input Gear Part No. 5-P-1102
(20) Input Gear Part No. 5-P-1103
(24) Input Gear Part No. 5-P-581
(25) Filler block furnished with P.T.O.

QL7220	TRDXT720-7220
TR720-7220	TRQL7220
TRD7250	TRT720-7220
TRDL720-7220	TRTL720-7220
TRDX720-7220	

LEFT SIDE ONLY

TRANSMISSION GEAR DATA:
L.H. 6-Bolt Opening Gear REAR of Centerline
38 Teeth - SPUR
PITCH LINE TO APERTURE FACE:
3.0500" (77.4700MM)

RIGHT SIDE ONLY

TRANSMISSION GEAR DATA:
R.H. 6-Bolt Opening Gear REAR of Centerline
38 Teeth - SPUR
PITCH LINE TO APERTURE FACE:
3.0500" (77.4700MM)

Caution: Application Approval Required for P.T.O. Output Shaft Speeds Above 2500 R.P.M.

LEFT Side P.T.O. Model	Inter. Torq.	Dir. Rot.	Engine % Hi	Engine % Rev	Filler Block	Adapter Assy.	Stud Kit	RIGHT Side P.T.O. Model	Inter. Torq.	Dir. Rot.	Engine % Hi	Engine % Rev	Filler Block	Adapter Assy.	Stud Kit
ONE SPEED - SINGLE GEAR - MECHANICAL SHIFT															
100XRABX-*4 (1)	125	Opp	125		7-A-032(T)	328530-2X	328291-17X	100XRABX-*4 (1)	125	Opp	125		7-A-032(T)	328530-2X	328291-17X
ONE SPEED - TWO GEAR - MECHANICAL SHIFT															
221XCABX-*6	250	Eng	58		7-A-032(T)	328530-2X	328170-83X	221XCABX-*4	250	Eng	58		7-A-032(T)	328530-2X	328170-83X
221XEABX-*6	250	Eng	64		7-A-032(T)	328530-2X	328170-83X	221XEABX-*4	250	Eng	64		7-A-032(T)	328530-2X	328170-83X
221XLABX-*6	200	Eng	86		7-A-032(T)	328530-2X	328170-83X	221XLABX-*4	200	Eng	86		7-A-032(T)	328530-2X	328170-83X
221XPABX-*6	200	Eng	104		7-A-032(T)	328530-2X	328170-83X	221XPABX-*4	200	Eng	104		7-A-032(T)	328530-2X	328170-83X
442KFABX-*6 (2)	250	Eng	75		7-A-032(T)	328530-2X	7170-16X	442KFABX-*4 (2)	250	Eng	75		7-A-032(T)	328530-2X	7170-16X
442KLABX-*6 (3)	250	Eng	97		7-A-032(T)	328530-2X	7170-16X	442KLABX-*4 (3)	250	Eng	97		7-A-032(T)	328530-2X	7170-16X
442KQABX-*6 (3)	225	Eng	104		7-A-032(T)	328530-2X	7170-16X	442KQABX-*4 (3)	225	Eng	104		7-A-032(T)	328530-2X	7170-16X
442KRABX-*6 (3)	225	Eng	121		7-A-032(T)	328530-2X	7170-16X	442KRABX-*4 (3)	225	Eng	121		7-A-032(T)	328530-2X	7170-16X
442KSABX-*6 (3)	200	Eng	144		7-A-032(T)	328530-2X	7170-16X	442KSABX-*4 (3)	200	Eng	144		7-A-032(T)	328530-2X	7170-16X
442KUABX-*6 (3)	195	Eng	172		7-A-032(T)	328530-2X	7170-16X	442KUABX-*4 (3)	195	Eng	172		7-A-032(T)	328530-2X	7170-16X
442KWABX-*6 (3)	175	Eng	202		7-A-032(T)	328530-2X	7170-16X	442KWABX-*4 (3)	175	Eng	202		7-A-032(T)	328530-2X	7170-16X
442KXABX-*6 (3)	140	Eng	239		7-A-032(T)	328530-2X	7170-16X	442KXABX-*4 (3)	140	Eng	239		7-A-032(T)	328530-2X	7170-16X
ONE SPEED - TWO GEAR - POWERSHIFT (AIR)															
236KDABX-*6 (3)	250	Eng	79		7-A-032(T)	328530-2X	7170-16X	236KDABX-*4 (3)	250	Eng	79		7-A-032(T)	328530-2X	7170-16X
236KKABX-*6 (3)	250	Eng	101		7-A-032(T)	328530-2X	7170-16X	236KKABX-*4 (3)	250	Eng	101		7-A-032(T)	328530-2X	7170-16X
236KQABX-*6 (3)	250	Eng	136		7-A-032(T)	328530-2X	7170-16X	236KQABX-*4 (3)	250	Eng	136		7-A-032(T)	328530-2X	7170-16X
236KUABX-*6 (3)	225	Eng	155		7-A-032(T)	328530-2X	7170-16X	236KUABX-*4 (3)	225	Eng	155		7-A-032(T)	328530-2X	7170-16X
ONE SPEED - FORWARD & REVERSE															
340XFABX-*4 (4)	200	Eng	68	72	7-A-140(P)(5) 7-A-032(T)	328530-2X	7170-16X	340XFABX-*4 (4)	200	Eng	68	72	7-A-140(P)(5) 7-A-032(T)	328530-2X	7170-16X
352XSABX-*6 (3)	140	Eng	146	189	7-A-032(T)	328530-2X	7170-16X	352XSABX-*4 (3)	140	Eng	146	189	7-A-032(T)	328530-2X	7170-16X
ONE SPEED - DUAL SHAFT															
452XSABX-*6 (3)	140	Eng	146		7-A-032(T)	328530-2X	7170-16X	452XSABX-*6 (3)	140	Eng	146		7-A-032(T)	328530-2X	7170-16X

(1) Gear and Shaft Kit No. KXA-2-P-563
(2) Input Gear Part No. 5-P-1076
(3) Input Gear Part No. 5-P-1001
(4) Input Gear Part No. 5-P-579
(5) Filler block furnished with P.T.O.

D107	TRXL107-A	X1071
T107	TRXL1071	X1071-A
TRDL107	TRXL1071-A	
TRTXL107	X107	
TRXL107	X107-A	

LEFT SIDE ONLY

TRANSMISSION GEAR DATA:
L.H. 8-Bolt Opening Gear FORWARD of Centerline
37 Teeth - SPUR

PITCH LINE TO APERTURE FACE:
.5700" (14.4800MM)

RIGHT SIDE ONLY

TRANSMISSION GEAR DATA:
R.H. 6-Bolt Opening Gear FORWARD of Centerline
37 Teeth - SPUR

PITCH LINE TO APERTURE FACE:
2.8340" (71.9800MM)

Caution: Application Approval Required for P.T.O. Output Shaft Speeds Above 2500 R.P.M.

LEFT Side P.T.O. Model	Inter. Torq.	Dir. Rot.	Engine % Hi	Engine % Rev	Filler Block	Adapter Assy.	Stud Kit	RIGHT Side P.T.O. Model	Inter. Torq.	Dir. Rot.	Engine % Hi	Engine % Rev	Filler Block	Adapter Assy.	Stud Kit
ONE SPEED - SINGLE GEAR - MECHANICAL SHIFT															
								100XRAHX-*3 (1)	125	Opp	162		7-A-240(T)	328530-1X	7170-26X
ONE SPEED - TWO GEAR - MECHANICAL SHIFT															
221XCAHX-*5	250	Opp	72		7-A-032 (2)	328564X	Furnished	221XCAHX-*3	250	Eng	72		7-A-032(P)(2) 7-A-240(T)	328530-1X	328170-32X
221XEAHX-*5	250	Opp	84			328564X	Furnished	221XEAHX-*3	250	Eng	84		7-A-240(T)	328530-1X	328170-32X
221XLAHX-*5	200	Opp	112			328564X	Furnished	221XLAHX-*3	200	Eng	112		7-A-240(T)	328530-1X	328170-32X
221XPAHX-*5	200	Opp	136			328564X	Furnished	221XPAHX-*3	200	Eng	136		7-A-240(T)	328530-1X	328170-32X
442XAAHX-*5 (3)	250	Opp	64			328564X	Furnished	442KFAHX-*3 (5)	250	Eng	101		7-A-240(T)	328530-1X	328170-168X
442XCAHX-*5 (4)	250	Opp	81			328564X	Furnished	442KHAHX-*3 (6)	250	Eng	117		7-A-240(T)	328530-1X	328170-168X
442XFAHX-*5 (5)	250	Opp	101			328564X	Furnished	442KLAHX-*3 (7)	250	Eng	130		7-A-240(T)	328530-1X	328170-168X
442XHAHX-*5 (6)	250	Opp	117			328564X	Furnished	442KQAHX-*3 (7)	225	Eng	140		7-A-240(T)	328530-1X	328170-168X
442XLAHX-*5 (7)	250	Opp	130			328564X	Furnished	442KRAHX-*3 (7)	225	Eng	162		7-A-240(T)	328530-1X	328170-168X
442XQAHX-*5 (7)	225	Opp	140			328564X	Furnished	442KSAHX-*3 (7)	200	Eng	193		7-A-240(T)	328530-1X	328170-168X
442XRAHX-*5 (7)	225	Opp	162			328564X	Furnished	442KUAHX-*3 (7)	195	Eng	230		7-A-240(T)	328530-1X	328170-168X
442XSAHX-*5 (7)	200	Opp	193			328564X	Furnished	442KWAHX-*3 (7)	175	Eng	271		7-A-240(T)	328530-1X	328170-168X
442XUAHX-*5 (7)	195	Opp	230			328564X	Furnished	442KXAHX-*3 (7)	140	Eng	321		7-A-240(T)	328530-1X	328170-168X
442XWAHX-*5 (7)	175	Opp	271			328564X	Furnished								
442XXAHX-*5 (7)	140	Opp	321			328564X	Furnished								
489XAAHX-*5 (3)	250	Opp	64		8-A-062 8-A-093		328170-8X								
489XCAHX-*5 (4)	250	Opp	81		8-A-062 8-A-093		328170-8X								
489XFAHX-*5 (5)	250	Opp	101		8-A-062 8-A-093		328170-8X								
489XHAHX-*5 (6)	250	Opp	117		8-A-062 8-A-093		328170-8X								
489XLAHX-*5 (7)	250	Opp	130		8-A-062 8-A-093		328170-8X								

Continued Next Page

CAUTION: Do not use geared adapters with 442 "A" and "C" ratios.

CAUTION: 660/680 Series: Applications above 1500 RPM, contact Chelsea Technical Service for approval.

NOTE: All speeds shown are with transmission in 5th speed. For P.T.O. speeds with the main transmission in all other gears, multiply speeds shown by the following: for 1st - .116, 2nd - .200, 3rd - .353, 4th - .603.

NOTE: The 812 Series will not mount. The output shaft interferes with the reverse idler bulge.

NOTE: Due to the offset in the 230 series housing, assembly 5 must be used to obtain proper backlash.

NOTE: The AK & XK output flanges can not be used with the "A" & "C" ratios on the 489 Series P.T.O.s due to mounting stud interference. Use a RA or RB rotatable flange for the XK and the RA for the AK flange.

NOTE: If Ordering the 230/231 Series with the Shaft Brake Option, order the "BA" Output for Automatic Transmissions and the "BD" Output for Manual Transmissions.

(1) Gear and Shaft Kit No. KXA-2-P-565
(2) Filler block furnished with P.T.O.
(3) Input Gear Part No. 5-P-1280
(4) Input Gear Part No. 5-P-1287
(5) Input Gear Part No. 5-P-1077
(6) Input Gear Part No. 5-P-1364
(7) Input Gear Part No. 5-P-1004

D107	TRXL107-A	X1071
T107	TRXL1071	X1071-A
TRDL107	TRXL1071-A	
TRTXL107	X107	
TRXL107	X107-A	

LEFT SIDE ONLY

TRANSMISSION GEAR DATA:
L.H. 8-Bolt Opening Gear FORWARD of Centerline
37 Teeth - SPUR

PITCH LINE TO APERTURE FACE:
.5700" (14.4800MM)

RIGHT SIDE ONLY

TRANSMISSION GEAR DATA:
R.H. 6-Bolt Opening Gear FORWARD of Centerline
37 Teeth - SPUR

PITCH LINE TO APERTURE FACE:
2.8340" (71.9800MM)

Caution: Application Approval Required for P.T.O. Output Shaft Speeds Above 2500 R.P.M.

ONE SPEED - TWO GEAR - MECHANICAL SHIFT

LEFT Side P.T.O. Model	Inter. Torq.	Dir. Rot.	Engine % Hi	Engine % Rev	Filler Block	Adapter Assy.	Stud Kit	RIGHT Side P.T.O. Model	Inter. Torq.	Dir. Rot.	Engine % Hi	Engine % Rev	Filler Block	Adapter Assy.	Stud Kit
489XQAHX-*5 (7)	225	Opp	140		8-A-062 8-A-093		328170-8X								
489XRAHX-*5 (7)	225	Opp	162		8-A-062 8-A-093		328170-8X								
489XSAHX-*5 (7)	200	Opp	193		8-A-062 8-A-093		328170-8X								
489XUAHX-*5 (7)	195	Opp	230		8-A-062 8-A-093		328170-8X								
489XWAHX-*5 (7)	175	Opp	271		8-A-062 8-A-093		328170-8X								
489XXAHX-*5 (7)	140	Opp	321		8-A-062 8-A-093		328170-8X								
680XFAHX-*5 (8)	375	Opp	101		8-A-062 8-A-093		328170-8X								
680XQAHX-*5 (9)	375	Opp	140		8-A-062 8-A-093		328170-8X								
680XSAHX-*5 (10)	325	Opp	193		8-A-062 8-A-093		328170-8X								
823XBAHX-*5 (11)	500	Opp	69		8-A-190		328170-14X								
823XJAHX-*5 (12)	500	Opp	104		8-A-190		328170-14X								
823XMAHX-*5 (13)	500	Opp	122		8-A-190		328170-14X								
823XRAHX-*5 (14)	400	Opp	168		8-A-190		328170-14X								
880XBAHX-*5 (15)	500	Opp	69		8-A-190		328170-14X								
880XDAHX-*5 (16)	500	Opp	81		8-A-190		328170-14X								
880XGAHX-*5 (17)	500	Opp	88		8-A-190		328170-14X								
880XJAHX-*5 (18)	500	Opp	104		8-A-190		328170-14X								
880XMAHX-*5 (19)	500	Opp	122		8-A-190		328170-14X								
880XQAHX-*5 (20)	450	Opp	142		8-A-190		328170-14X								
880XRAHX-*5 (21)	400	Opp	168		8-A-190		328170-14X								
880XTAHX-*5 (22)	350	Opp	217		8-A-190		328170-14X								

Continued Next Page

CAUTION: Do not use geared adapters with 442 "A" and "C" ratios.

CAUTION: 660/680 Series: Applications above 1500 RPM, contact Chelsea Technical Service for approval.

NOTE: All speeds shown are with transmission in 5th speed. For P.T.O. speeds with the main transmission in all other gears, multiply speeds shown by the following: for 1st - .116, 2nd - .200, 3rd - .353, 4th - .603.

NOTE: The 812 Series will not mount. The output shaft interferes with the reverse idler bulge.

NOTE: Due to the offset in the 230 series housing, assembly 5 must be used to obtain proper backlash.

NOTE: The AK & XK output flanges can not be used with the "A" & "C" ratios on the 489 Series P.T.O.s due to mounting stud interference. Use a RA or RB rotatable flange for the XK and the RA for the AK flange.

NOTE: If Ordering the 230/231 Series with the Shaft Brake Option, order the "BA" Output for Automatic Transmissions and the "BD" Output for Manual Transmissions.

(7) Input Gear Part No. 5-P-1004
(8) Input Gear Part No. 5-P-1242
(9) Input Gear Part No. 5-P-1246
(10) Input Gear Part No. 5-P-1322
(11) Input Gear Part No. 5-P-285
(12) Input Gear Part No. 5-P-325
(13) Input Gear Part No. 5-P-283
(14) Input Gear Part No. 5-P-721
(15) Input Gear Part No. 5-P-1100
(16) Input Gear Part No. 5-P-1101
(17) Input Gear Part No. 5-P-1135
(18) Input Gear Part No. 5-P-1102
(19) Input Gear Part No. 5-P-1103
(20) Input Gear Part No. 5-P-1385
(21) Input Gear Part No. 5-P-1104
(22) Input Gear Part No. 5-P-1105

January 2008

Parker Hannifin Corporation
Chelsea Products Division
Olive Branch, MS 38654 USA

D107	TRXL107-A	X1071
T107	TRXL1071	X1071-A
TRDL107	TRXL1071-A	
TRTXL107	X107	
TRXL107	X107-A	

LEFT SIDE ONLY

TRANSMISSION GEAR DATA:
L.H. 8-Bolt Opening Gear FORWARD of Centerline
37 Teeth - SPUR

PITCH LINE TO APERTURE FACE:
.5700" (14.4800MM)

RIGHT SIDE ONLY

TRANSMISSION GEAR DATA:
R.H. 6-Bolt Opening Gear FORWARD of Centerline
37 Teeth - SPUR

PITCH LINE TO APERTURE FACE:
2.8340" (71.9800MM)

Caution: Application Approval Required for P.T.O. Output Shaft Speeds Above 2500 R.P.M.

LEFT Side P.T.O. Model	Inter. Torq.	Dir. Rot.	Engine % Hi	Engine % Rev	Filler Block	Adapter Assy.	Stud Kit	RIGHT Side P.T.O. Model	Inter. Torq.	Dir. Rot.	Engine % Hi	Engine % Rev	Filler Block	Adapter Assy.	Stud Kit
ONE SPEED - TWO GEAR - POWERSHIFT (AIR)															
230XAAJX-*5	250	Opp	53		7-A-032	310778X	Furnished	236KDAHX-*3 (7)	250	Eng	105		7-A-240(T)	328530-1X	328170-168X
230XBAJX-*5	250	Opp	69		7-A-032	310778X	Furnished	236KKAHX-*3 (7)	250	Eng	135		7-A-240(T)	328530-1X	328170-168X
230XDAJX-*5	250	Opp	80		7-A-032	310778X	Furnished	236KQAHX-*3 (7)	250	Eng	182		7-A-240(T)	328530-1X	328170-168X
230XKAJX-*5	250	Opp	108		7-A-032	310778X	Furnished	236KUAHX-*3 (7)	225	Eng	209		7-A-240(T)	328530-1X	328170-168X
230XQAJX-*5	250	Opp	143		7-A-032	310778X	Furnished								
230XUAJX-*5	225	Opp	229		7-A-032	310778X	Furnished								
236XDAHX-*5 (7)	250	Opp	105			328564X	Furnished								
236XKAHX-*5 (7)	250	Opp	135			328564X	Furnished								
236XQAHX-*5 (7)	250	Opp	182			328564X	Furnished								
236XUAHX-*5 (7)	225	Opp	209			328564X	Furnished								
885XBAHX-*5 (15)	500	Opp	69		8-A-190		328170-14X								
885XGAHX-*5 (17)	500	Opp	88		8-A-190		328170-14X								
885XJAHX-*5 (18)	500	Opp	104		8-A-190		328170-14X								
885XMAHX-*5 (19)	500	Opp	122		8-A-190		328170-14X								
ONE SPEED - FORWARD & REVERSE															
340XFAHX-*5 (23)	200	Opp	88	92	7-A-140(P)(2)	328564X	Furnished	340XFAHX-*5 (23)	200	Eng	88	92	7-A-140(P)(2) 7-A-240(T)	328530-1X	328170-168X
352XSAHX-*5 (7)	140	Opp	196	254		328564X	Furnished	352XSAHX-*3 (7)	140	Eng	196	254	7-A-240(T)	328530-1X	328170-168X
863XBAHX-*5	500	Opp	69	85	8-A-190		328170-15X								
ONE SPEED - DUAL SHAFT															
452XSAHX-*3 (7)	140	Opp	196			328564X	Furnished	452XSAHX-*3 (7)	140	Eng	196		7-A-240(T)	328530-1X	328170-168X
GEARED ADAPTERS															
628XAHX-3AH					8-A-190		328170-8X								

CAUTION: Do not use geared adapters with 442 "A" and "C" ratios.

CAUTION: 660/680 Series: Applications above 1500 RPM, contact Chelsea Technical Service for approval.

NOTE: All speeds shown are with transmission in 5th speed. For P.T.O. speeds with the main transmission in all other gears, multiply speeds shown by the following: for 1st - .116, 2nd - .200, 3rd - .353, 4th - .603.

NOTE: The 812 Series will not mount. The output shaft interferes with the reverse idler bulge.

NOTE: Due to the offset in the 230 series housing, assembly 5 must be used to obtain proper backlash.

NOTE: The AK & XK output flanges can not be used with the "A" & "C" ratios on the 489 Series P.T.O.s due to mounting stud interference. Use a RA or RB rotatable flange for the XK and the RA for the AK flange.

NOTE: If Ordering the 230/231 Series with the Shaft Brake Option, order the "BA" Output for Automatic Transmissions and the "BD" Output for Manual Transmissions.

(2) Filler block furnished with P.T.O.
(7) Input Gear Part No. 5-P-1004
(15) Input Gear Part No. 5-P-1100
(17) Input Gear Part No. 5-P-1135
(18) Input Gear Part No. 5-P-1102
(19) Input Gear Part No. 5-P-1103
(23) Input Gear Part No. 5-P-581

January 2008

Parker Hannifin Corporation
Chelsea Products Division
Olive Branch, MS 38654 USA

D1070	TRDLG1070
G1070	TRTXL1070
T1070	TRTXL1070-B
T1070-B	
TRDL1070	

LEFT SIDE ONLY

TRANSMISSION GEAR DATA:
L.H. 8-Bolt Opening Gear REAR of Centerline
37 Teeth - SPUR
PITCH LINE TO APERTURE FACE:
.3750" (9.5200MM)

RIGHT SIDE ONLY

TRANSMISSION GEAR DATA:
R.H. 6-Bolt Opening Gear REAR of Centerline
37 Teeth - SPUR
PITCH LINE TO APERTURE FACE:
2.8340" (71.9800MM)

Caution: Application Approval Required for P.T.O. Output Shaft Speeds Above 2500 R.P.M.

LEFT Side P.T.O. Model	Inter. Torq.	Dir. Rot.	Engine % Hi	Engine % Rev	Filler Block	Adapter Assy.	Stud Kit	RIGHT Side P.T.O. Model	Inter. Torq.	Dir. Rot.	Engine % Hi	Engine % Rev	Filler Block	Adapter Assy.	Stud Kit
ONE SPEED - SINGLE GEAR - MECHANICAL SHIFT															
								100XRAHX-*4 (1)	125	Opp	209		7-A-240(T)	328530-1X	7170-26X
ONE SPEED - TWO GEAR - MECHANICAL SHIFT															
221XCAHX-*6	250	Opp	93		7-A-032(P)(2)	328564X	Furnished	221XCAHX-*4	250	Eng	93		7-A-032(P)(2) 7-A-240(T)	328530-1X	328170-32X
221XEAHX-*6	250	Opp	107			328564X	Furnished	221XEAHX-*4	250	Eng	107		7-A-240(T)	328530-1X	328170-32X
221XLAHX-*6	200	Opp	144			328564X	Furnished	221XLAHX-*4	200	Eng	144		7-A-240(T)	328530-1X	328170-32X
221XPAHX-*6	200	Opp	174			328564X	Furnished	221XPAHX-*4	200	Eng	174		7-A-240(T)	328530-1X	328170-32X
442XFAHX-*6 (3)	250	Opp	129			328564X	Furnished	442KFAHX-*4 (3)	250	Eng	129		7-A-240(T)	328530-1X	328170-168X
442XHAHX-*6 (4)	250	Opp	150			328564X	Furnished	442KHAHX-*4 (4)	250	Eng	150		7-A-240(T)	328530-1X	328170-168X
442XLAHX-*6 (5)	250	Opp	168			328564X	Furnished	442KLAHX-*4 (5)	250	Eng	168		7-A-240(T)	328530-1X	328170-168X
442XQAHX-*6 (5)	225	Opp	180			328564X	Furnished	442KQAHX-*4 (5)	225	Eng	180		7-A-240(T)	328530-1X	328170-168X
442XRAHX-*6 (5)	225	Opp	209			328564X	Furnished	442KRAHX-*4 (5)	225	Eng	209		7-A-240(T)	328530-1X	328170-168X
442XSAHX-*6 (5)	200	Opp	249			328564X	Furnished	442KSAHX-*4 (5)	200	Eng	249		7-A-240(T)	328530-1X	328170-168X
442XUAHX-*6 (5)	195	Opp	296			328564X	Furnished	442KUAHX-*4 (5)	195	Eng	296		7-A-240(T)	328530-1X	328170-168X
442XWAHX-*6 (5)	175	Opp	349			328564X	Furnished	442KWAHX-*4 (5)	175	Eng	349		7-A-240(T)	328530-1X	328170-168X
442XXAHX-*6 (5)	140	Opp	412			328564X	Furnished	442KXAHX-*4 (5)	140	Eng	412		7-A-240(T)	328530-1X	328170-168X
489XFAHX-*6 (3)	250	Opp	129		8-A-062 8-A-093		328170-8X								
489XHAHX-*6 (4)	250	Opp	150		8-A-062 8-A-093		328170-8X								
489XLAHX-*6 (5)	250	Opp	168		8-A-062 8-A-093		328170-8X								
489XQAHX-*6 (5)	225	Opp	180		8-A-062 8-A-093		328170-8X								
489XRAHX-*6 (5)	225	Opp	209		8-A-062 8-A-093		328170-8X								
489XSAHX-*6 (5)	200	Opp	249		8-A-062 8-A-093		328170-8X								

Continued Next Page

CAUTION: Do not use geared adapters with 442 "A" and "C" ratios.

CAUTION: 660/680 Series: Applications above 1500 RPM, contact Chelsea Technical Service for approval.

NOTE: All speeds shown are with the transmission in 5th speed. For P.T.O. speeds with the main transmission in all others, multiply speed shown by the following: 1st - .116, 2nd - .200, 3rd - .353,4th - .603.

NOTE: Due to the offset in the 230 Series housing, assembly 4 must be used to obtain proper backlash on the left side mounting.

NOTE: The AK & XK output flanges can not be used with the "A" & "C" ratios on the 489 Series P.T.O.s due to mounting stud interference. Use a RA or RB rotatable flange for the XK and the RA for the AK flange.NOTE: The 812 Series P.T.O. will not mount on this transmission because the output shaft interferes with the reverse idler buldge.

NOTE: If Ordering the 230/231 Series with the Shaft Brake Option, order the "BA" Output for Automatic Transmissions and the "BD" Output for Manual Transmissions.

(1) Gear and Shaft Kit No. KXA-2-P-565
(2) Filler block furnished with P.T.O.
(3) Input Gear Part No. 5-P-1077
(4) Input Gear Part No. 5-P-1364
(5) Input Gear Part No. 5-P-1004

D1070	TRDLG1070
G1070	TRTXL1070
T1070	TRTXL1070-B
T1070-B	
TRDL1070	

LEFT SIDE ONLY

TRANSMISSION GEAR DATA:
L.H. 8-Bolt Opening Gear REAR of Centerline
37 Teeth - SPUR
PITCH LINE TO APERTURE FACE:
.3750" (9.5200MM)

RIGHT SIDE ONLY

TRANSMISSION GEAR DATA:
R.H. 6-Bolt Opening Gear REAR of Centerline
37 Teeth - SPUR
PITCH LINE TO APERTURE FACE:
2.8340" (71.9800MM)

Caution: Application Approval Required for P.T.O. Output Shaft Speeds Above 2500 R.P.M.

ONE SPEED - TWO GEAR - MECHANICAL SHIFT

LEFT Side P.T.O. Model	Inter. Torq.	Dir. Rot.	Engine % Hi	Engine % Rev	Filler Block	Adapter Assy.	Stud Kit	RIGHT Side P.T.O. Model	Inter. Torq.	Dir. Rot.	Engine % Hi	Engine % Rev	Filler Block	Adapter Assy.	Stud Kit
489XUAHX-*6 (5)	195	Opp	296		8-A-062 8-A-093		328170-8X								
489XWAHX-*6 (5)	175	Opp	349		8-A-062 8-A-093		328170-8X								
489XXAHX-*6 (5)	140	Opp	412		8-A-062 8-A-093		328170-8X								
680XFAHX-*6 (6)	375	Opp	129		8-A-062 8-A-093		328170-8X								
680XQAHX-*6 (7)	375	Opp	180		8-A-062 8-A-093		328170-8X								
680XSAHX-*6 (8)	325	Opp	249		8-A-062 8-A-093		328170-8X								
823XBAHX-*6 (9)	500	Opp	88		8-A-190		328170-14X								
823XJAHX-*6 (10)	500	Opp	133		8-A-190		328170-14X								
823XMAHX-*6 (11)	500	Opp	157		8-A-190		328170-14X								
823XRAHX-*6 (12)	400	Opp	216		8-A-190		328170-14X								
880XBAHX-*6 (13)	500	Opp	88		8-A-190		328170-14X								
880XDAHX-*6 (14)	500	Opp	104		8-A-190		328170-14X								
880XGAHX-*6 (15)	500	Opp	113		8-A-190		328170-14X								
880XJAHX-*6 (16)	500	Opp	133		8-A-190		328170-14X								
880XMAHX-*6 (17)	500	Opp	157		8-A-190		328170-14X								
880XQAHX-*6 (18)	450	Opp	183		8-A-190		328170-14X								
880XRAHX-*6 (19)	400	Opp	216		8-A-190		328170-14X								
880XTAHX-*6 (20)	350	Opp	279		8-A-190		328170-14X								

Continued Next Page

CAUTION: Do not use geared adapters with 442 "A" and "C" ratios.

CAUTION: 660/680 Series: Applications above 1500 RPM, contact Chelsea Technical Service for approval.

NOTE: All speeds shown are with the transmission in 5th speed. For P.T.O. speeds with the main transmission in all others, multiply speed shown by the following: 1st - .116, 2nd - .200, 3rd - .353,4th - .603.

NOTE: Due to the offset in the 230 Series housing, assembly 4 must be used to obtain proper backlash on the left side mounting.

NOTE: The AK & XK output flanges can not be used with the "A" & "C" ratios on the 489 Series P.T.O.s due to mounting stud interference. Use a RA or RB rotatable flange for the XK and the RA for the AK flange.NOTE: The 812 Series P.T.O. will not mount on this transmission because the output shaft interferes with the reverse idler buldge.

NOTE: If Ordering the 230/231 Series with the Shaft Brake Option, order the "BA" Output for Automatic Transmissions and the "BD" Output for Manual Transmissions.

(5) Input Gear Part No. 5-P-1004
(6) Input Gear Part No. 5-P-1242
(7) Input Gear Part No. 5-P-1246
(8) Input Gear Part No. 5-P-1322
(9) Input Gear Part No. 5-P-285
(10) Input Gear Part No. 5-P-325
(11) Input Gear Part No. 5-P-283
(12) Input Gear Part No. 5-P-721
(13) Input Gear Part No. 5-P-1100
(14) Input Gear Part No. 5-P-1101
(15) Input Gear Part No. 5-P-1135
(16) Input Gear Part No. 5-P-1102
(17) Input Gear Part No. 5-P-1103
(18) Input Gear Part No. 5-P-1385
(19) Input Gear Part No. 5-P-1104
(20) Input Gear Part No. 5-P-1105

Parker Hannifin Corporation
Chelsea Products Division
Olive Branch, MS 38654 USA

D1070	TRDLG1070
G1070	TRTXL1070
T1070	TRTXL1070-B
T1070-B	
TRDL1070	

LEFT SIDE ONLY

TRANSMISSION GEAR DATA:
L.H. 8-Bolt Opening Gear REAR of Centerline
37 Teeth - SPUR
PITCH LINE TO APERTURE FACE:
.3750" (9.5200MM)

RIGHT SIDE ONLY

TRANSMISSION GEAR DATA:
R.H. 6-Bolt Opening Gear REAR of Centerline
37 Teeth - SPUR
PITCH LINE TO APERTURE FACE:
2.8340" (71.9800MM)

Caution: Application Approval Required for P.T.O. Output Shaft Speeds Above 2500 R.P.M.

LEFT Side P.T.O. Model	Inter. Torq.	Dir. Rot.	Engine % Hi	Engine % Rev	Filler Block	Adapter Assy.	Stud Kit	RIGHT Side P.T.O. Model	Inter. Torq.	Dir. Rot.	Engine % Hi	Engine % Rev	Filler Block	Adapter Assy.	Stud Kit
ONE SPEED - TWO GEAR - POWERSHIFT (AIR)															
230XAAJX-*4 (21)	250	Opp	53		7-A-032	310778X	Furnished	236KDAHX-*4 (5)	250	Eng	136		7-A-240(T)	328530-1X	328170-168X
230XBAJX-*4 (22)	250	Opp	69		7-A-032	310778X	Furnished	236KKAHX-*4 (5)	250	Eng	174		7-A-240(T)	328530-1X	328170-168X
230XDAJX-*4 (23)	250	Opp	79		7-A-032	310778X	Furnished	236KQAHX-*4 (5)	250	Eng	234		7-A-240(T)	328530-1X	328170-168X
230XKAJX-*4 (24)	250	Opp	107		7-A-032	310778X	Furnished	236KUAHX-*4 (5)	225	Eng	268		7-A-240(T)	328530-1X	328170-168X
230XQAJX-*4 (25)	250	Opp	143		7-A-032	310778X	Furnished								
230XUAJX-*4 (26)	225	Opp	229		7-A-032	310778X	Furnished								
236XDAHX-*6 (5)	250	Opp	136			328564X	Furnished								
236XKAHX-*6 (5)	250	Opp	174			328564X	Furnished								
236XQAHX-*6 (5)	250	Opp	234			328564X	Furnished								
236XUAHX-*6 (5)	225	Opp	268			328564X	Furnished								
885XGAHX-*6 (15)	500	Opp	113				Furnished								
885XJAHX-*6 (16)	500	Opp	133		8-A-190		328170-14X								
885XMAHX-*6 (17)	500	Opp	157		8-A-190		328170-14X								
ONE SPEED - FORWARD & REVERSE															
340XFAHX-*4 (27)	200	Opp	113	119	7-A-140(P)(2)	328564X	Furnished	340XFAHX-*4 (27)	200	Eng	113	119	7-A-140(P)(2) 7-A-240(T)	328530-1X	328170-168X
352XSAHX-*6 (5)	140	Opp	252	326		328564X	Furnished	352XSAHX-*4 (5)	140	Eng	252	326	7-A-240(T)	328530-1X	328170-168X
863XBAHX-*4	500	Opp	88	109	8-A-190		328170-15X								
ONE SPEED - DUAL SHAFT															
452XSAHX-*6 (5)	140	Opp	252			328564X	Furnished	452XSAHX-*6 (5)	140	Eng	252		7-A-240(T)	328530-1X	328170-168X
GEARED ADAPTERS															
628XAHX-3AH					8-A-190		328170-8X								

CAUTION: Do not use geared adapters with 442 "A" and "C" ratios.

CAUTION: 660/680 Series: Applications above 1500 RPM, contact Chelsea Technical Service for approval.

NOTE: All speeds shown are with the transmission in 5th speed. For P.T.O. speeds with the main transmission in all others, multiply speed shown by the following: 1st - .116, 2nd - .200, 3rd - .353,4th - .603.

NOTE: Due to the offset in the 230 Series housing, assembly 4 must be used to obtain proper backlash on the left side mounting.

NOTE: The AK & XK output flanges can not be used with the "A" & "C" ratios on the 489 Series P.T.O.s due to mounting stud interference. Use a RA or RB rotatable flange for the XK and the RA for the AK flange.NOTE: The 812 Series P.T.O. will not mount on this transmission because the output shaft interferes with the reverse idler buldge.

NOTE: If Ordering the 230/231 Series with the Shaft Brake Option, order the "BA" Output for Automatic Transmissions and the "BD" Output for Manual Transmissions.

(2) Filler block furnished with P.T.O.
(5) Input Gear Part No. 5-P-1004
(15) Input Gear Part No. 5-P-1135
(16) Input Gear Part No. 5-P-1102
(17) Input Gear Part No. 5-P-1103
(21) Input Gear Part No. 5-P-567
(22) Input Gear Part No. 5-P-568
(23) Input Gear Part No. 5-P-695
(24) Input Gear Part No. 5-P-769
(25) Input Gear Part No. 5-P-770
(26) Input Gear Part No. 5-P-1144
(27) Input Gear Part No. 5-P-581

January 2008

Parker Hannifin Corporation
Chelsea Products Division
Olive Branch, MS 38654 USA

10760
10780
TRL10760
TRL10780

LEFT SIDE ONLY | **RIGHT SIDE ONLY**

TRANSMISSION GEAR DATA:
L.H. 8-Bolt Opening Gear FORWARD of Centerline
34 Teeth - SPUR
PITCH LINE TO APERTURE FACE:
.8050" (20.4500MM)

TRANSMISSION GEAR DATA:
R.H. 6-Bolt Opening Gear FORWARD of Centerline
34 Teeth - SPUR
PITCH LINE TO APERTURE FACE:
3.0850" (78.3600MM)

Caution: Application Approval Required for P.T.O. Output Shaft Speeds Above 2500 R.P.M.

LEFT Side P.T.O. Model	Inter. Torq.	Dir. Rot.	Engine % Hi	Engine % Rev	Filler Block	Adapter Assy.	Stud Kit	RIGHT Side P.T.O. Model	Inter. Torq.	Dir. Rot.	Engine % Hi	Engine % Rev	Filler Block	Adapter Assy.	Stud Kit
ONE SPEED - SINGLE GEAR - MECHANICAL SHIFT															
								100XRAHX-*3 (1)	125	Opp	119			328530-1X	328291-7X
ONE SPEED - TWO GEAR - MECHANICAL SHIFT															
221ZCAHX-*5	250	Opp	53		7-A-032(P)(2)	328564X	Furnished	221XCAHX-*3	250	Eng	53		7-A-032(P)(2)	328530-1X	328170-83X
221ZEAHX-*5	250	Opp	61			328564X	Furnished	221XEAHX-*3	250	Eng	61			328530-1X	328170-83X
221ZLAHX-*5	200	Opp	82			328564X	Furnished	221XLAHX-*3	200	Eng	82			328530-1X	328170-83X
221ZPAHX-*5	200	Opp	99			328564X	Furnished	221XPAHX-*3	200	Eng	99			328530-1X	328170-83X
442ZAAHX-*5 (3)	250	Opp	46			328564X	Furnished	442KFAHX-*3 (5)	250	Eng	73			328530-1X	7170-16X
442ZCAHX-*5 (4)	250	Opp	59			328564X	Furnished	442KHAHX-*3 (6)	250	Eng	85			328530-1X	7170-16X
442ZFAHX-*5 (5)	250	Opp	73			328564X	Furnished	442KLAHX-*3 (7)	250	Eng	95			328530-1X	7170-16X
442ZHAHX-*5 (6)	250	Opp	85			328564X	Furnished	442KQAHX-*3 (7)	225	Eng	102			328530-1X	7170-16X
442ZLAHX-*5 (7)	250	Opp	95			328564X	Furnished	442KRAHX-*3 (7)	225	Eng	119			328530-1X	7170-16X
442ZQAHX-*5 (7)	225	Opp	102			328564X	Furnished	442KSAHX-*3 (7)	200	Eng	141			328530-1X	7170-16X
442ZRAHX-*5 (7)	225	Opp	119			328564X	Furnished	442KUAHX-*3 (7)	195	Eng	168			328530-1X	7170-16X
442ZSAHX-*5 (7)	200	Opp	141			328564X	Furnished	442KWAHX-*3 (7)	175	Eng	198			328530-1X	7170-16X
442ZUAHX-*5 (7)	195	Opp	168			328564X	Furnished	442KXAHX-*3 (7)	140	Eng	234			328530-1X	7170-16X
442ZWAHX-*5 (7)	175	Opp	198			328564X	Furnished								
442ZXAHX-*5 (7)	140	Opp	234			328564X	Furnished								
489XAAHX-*5 (3)	250	Opp	46				Furnished								
489XCAHX-*5 (4)	250	Opp	59				Furnished								
489XFAHX-*5 (5)	250	Opp	73				Furnished								
489XHAHX-*5 (6)	250	Opp	85				Furnished								
489XLAHX-*5 (7)	250	Opp	95				Furnished								
489XQAHX-*5 (7)	225	Opp	102				Furnished								
489XRAHX-*5 (7)	225	Opp	119				Furnished								
489XSAHX-*5 (7)	200	Opp	141				Furnished								
489XUAHX-*5 (7)	195	Opp	168				Furnished								
489XWAHX-*5 (7)	175	Opp	198				Furnished								
489XXAHX-*5 (7)	140	Opp	234				Furnished								

Continued Next Page

CAUTION: Do not use geared adapters with 442 "A" and "C" ratios.

CAUTION: 660/680 Series: Applications above 1500 RPM, contact Chelsea Technical Service for approval.

NOTE: The AK & XK output flanges can not be used with the "A" & "C" ratios on the 489 Series P.T.O.s due to mounting stud interference. Use a RA or RB rotatable flange for the XK and the RA for the AK flange.

NOTE: If Ordering the 230/231 Series with the Shaft Brake Option, order the "BA" Output for Automatic Transmissions and the "BD" Output for Manual Transmissions.

(1) Gear and Shaft Kit No. KXA-2-P-565
(2) Filler block furnished with P.T.O.
(3) Input Gear Part No. 5-P-1280
(4) Input Gear Part No. 5-P-1287
(5) Input Gear Part No. 5-P-1077
(6) Input Gear Part No. 5-P-1364
(7) Input Gear Part No. 5-P-1004

10760
10780
TRL10760
TRL10780

LEFT SIDE ONLY | **RIGHT SIDE ONLY**

TRANSMISSION GEAR DATA:
L.H. 8-Bolt Opening Gear FORWARD of Centerline
34 Teeth - SPUR
PITCH LINE TO APERTURE FACE:
.8050" (20.4500MM)

TRANSMISSION GEAR DATA:
R.H. 6-Bolt Opening Gear FORWARD of Centerline
34 Teeth - SPUR
PITCH LINE TO APERTURE FACE:
3.0850" (78.3600MM)

Caution: Application Approval Required for P.T.O. Output Shaft Speeds Above 2500 R.P.M.

LEFT Side P.T.O. Model	Inter. Torq.	Dir. Rot.	Engine % Hi	Engine % Rev	Filler Block	Adapter Assy.	Stud Kit	RIGHT Side P.T.O. Model	Inter. Torq.	Dir. Rot.	Engine % Hi	Engine % Rev	Filler Block	Adapter Assy.	Stud Kit
ONE SPEED - TWO GEAR - MECHANICAL SHIFT															
680XFAHX-*5 (8)	375	Opp	73				Furnished								
680XQAHX-*5 (9)	375	Opp	102				Furnished								
680XSAHX-*5 (10)	325	Opp	141				Furnished								
823XBAHX-*3 (11)	500	Opp	50				Furnished								
823XJAHX-*3 (12)	500	Opp	76				Furnished								
823XMAHX-*3 (13)	500	Opp	89				Furnished								
823XRAHX-*3 (14)	400	Opp	123				Furnished								
823XTKTX-*5 (15)	350	Opp	149		8-A-165 (2)		Furnished								
880XBAHX-*5 (16)	500	Opp	50				Furnished								
880XDAHX-*5 (17)	500	Opp	59				Furnished								
880XGAHX-*5 (18)	500	Opp	64				Furnished								
880XJAHX-*5 (19)	500	Opp	76				Furnished								
880XMAHX-*5 (20)	500	Opp	89				Furnished								
880XQAHX-*5 (21)	450	Opp	104				Furnished								
880XRAHX-*5 (22)	400	Opp	123				Furnished								
880XTAHX-*5 (23)	350	Opp	158				Furnished								
ONE SPEED - TWO GEAR - POWERSHIFT (AIR)															
230XAAJX-*3	250	Opp	39			328481X	Furnished	236KDAHX-*3 (7)	250	Eng	77			328530-1X	7170-16X
230XBAJX-*3	250	Opp	50			328481X	Furnished	236KKAHX-*3 (7)	250	Eng	99			328530-1X	7170-16X
230XDAJX-*3	250	Opp	58			328481X	Furnished	236KQAHX-*3 (7)	250	Eng	133			328530-1X	7170-16X
230XKAJX-*3	250	Opp	79			328481X	Furnished	236KUAHX-*3 (7)	225	Eng	152			328530-1X	7170-16X
230XQAJX-*3	250	Opp	105			328481X	Furnished								
230XUAJX-*3	225	Opp	167			328481X	Furnished								
236ZDAHX-*5 (7)	250	Opp	77			328564X	Furnished								
236ZKAHX-*5 (7)	250	Opp	99			328564X	Furnished								
236ZQAHX-*5 (7)	250	Opp	133			328564X	Furnished								
236ZUAHX-*5 (7)	225	Opp	152			328564X	Furnished								
885XBAHX-*3 (16)	500	Opp	50				Furnished								

Continued Next Page

CAUTION: Do not use geared adapters with 442 "A" and "C" ratios.

CAUTION: 660/680 Series: Applications above 1500 RPM, contact Chelsea Technical Service for approval.

NOTE: The AK & XK output flanges can not be used with the "A" & "C" ratios on the 489 Series P.T.O.s due to mounting stud interference. Use a RA or RB rotatable flange for the XK and the RA for the AK flange.

NOTE: If Ordering the 230/231 Series with the Shaft Brake Option, order the "BA" Output for Automatic Transmissions and the "BD" Output for Manual Transmissions.

(2) Filler block furnished with P.T.O.
(7) Input Gear Part No. 5-P-1004
(8) Input Gear Part No. 5-P-1242
(9) Input Gear Part No. 5-P-1246
(10) Input Gear Part No. 5-P-1322
(11) Input Gear Part No. 5-P-285
(12) Input Gear Part No. 5-P-325
(13) Input Gear Part No. 5-P-283
(14) Input Gear Part No. 5-P-721
(15) Input Gear Part No. 5-P-1395
(16) Input Gear Part No. 5-P-1100
(17) Input Gear Part No. 5-P-1101
(18) Input Gear Part No. 5-P-1135
(19) Input Gear Part No. 5-P-1102
(20) Input Gear Part No. 5-P-1103
(21) Input Gear Part No. 5-P-1385
(22) Input Gear Part No. 5-P-1104
(23) Input Gear Part No. 5-P-1105

January 2008

Parker Hannifin Corporation
Chelsea Products Division
Olive Branch, MS 38654 USA

10760
10780
TRL10760
TRL10780

LEFT SIDE ONLY | **RIGHT SIDE ONLY**

TRANSMISSION GEAR DATA:
L.H. 8-Bolt Opening Gear FORWARD of Centerline
34 Teeth - SPUR
PITCH LINE TO APERTURE FACE:
.8050" (20.4500MM)

TRANSMISSION GEAR DATA:
R.H. 6-Bolt Opening Gear FORWARD of Centerline
34 Teeth - SPUR
PITCH LINE TO APERTURE FACE:
3.0850" (78.3600MM)

Caution: Application Approval Required for P.T.O. Output Shaft Speeds Above 2500 R.P.M.

LEFT Side P.T.O. Model	Inter. Torq.	Dir. Rot.	Engine % Hi	Engine % Rev	Filler Block	Adapter Assy.	Stud Kit	RIGHT Side P.T.O. Model	Inter. Torq.	Dir. Rot.	Engine % Hi	Engine % Rev	Filler Block	Adapter Assy.	Stud Kit
ONE SPEED - TWO GEAR - POWERSHIFT (AIR)															
885XGAHX-*5 (18)	500	Opp	64				Furnished								
885XJAHX-*3 (19)	500	Opp	76				Furnished								
885XMAHX-*3 (20)	500	Opp	89				Furnished								
ONE SPEED - FORWARD & REVERSE															
340SFAHX-*5 (24)	200	Opp	64	67	7-A-140 (25)	310778X	Furnished	340XFAHX-*5 (24)	200	Eng	64	67	7-A-140(P)(2)	328530-1X	7170-16X
352ZSAHX-*5 (7)	140	Opp	143	185		328564X	Furnished	352XSAHX-*3 (7)	140	Eng	143	185		328530-1X	7170-16X
863XBAHX-*5	500	Opp	50	62			Furnished								
ONE SPEED - DUAL SHAFT															
452ZSAHX-*3 (7)	140	Opp	143			328564X	Furnished	452XSAHX-*3 (7)	140	Eng	143			328530-1X	7170-16X
GEARED ADAPTERS															
628XAHX-4AH							Furnished								

CAUTION: Do not use geared adapters with 442 "A" and "C" ratios.

CAUTION: 660/680 Series: Applications above 1500 RPM, contact Chelsea Technical Service for approval.

NOTE: The AK & XK output flanges can not be used with the "A" & "C" ratios on the 489 Series P.T.O.s due to mounting stud interference. Use a RA or RB rotatable flange for the XK and the RA for the AK flange.

NOTE: If Ordering the 230/231 Series with the Shaft Brake Option, order the "BA" Output for Automatic Transmissions and the "BD" Output for Manual Transmissions.

(2) Filler block furnished with P.T.O.
(7) Input Gear Part No. 5-P-1004
(18) Input Gear Part No. 5-P-1135
(19) Input Gear Part No. 5-P-1102
(20) Input Gear Part No. 5-P-1103
(24) Input Gear Part No. 5-P-581
(25) Filler block furnished with P.T.O. but not required

TRXL1070	X10710
TRXL1070-A	X10710-A
TRXL10710	
X1070	
X1070-A	

LEFT SIDE ONLY

TRANSMISSION GEAR DATA:
L.H. 8-Bolt Opening Gear FORWARD of Centerline
37 Teeth - SPUR
PITCH LINE TO APERTURE FACE:
.5700" (14.4800MM)

RIGHT SIDE ONLY

TRANSMISSION GEAR DATA:
R.H. 6-Bolt Opening Gear FORWARD of Centerline
37 Teeth - SPUR
PITCH LINE TO APERTURE FACE:
2.8340" (71.9800MM)

Caution: Application Approval Required for P.T.O. Output Shaft Speeds Above 2500 R.P.M.

LEFT Side P.T.O. Model	Inter. Torq.	Dir. Rot.	Engine % Hi	Engine % Rev	Filler Block	Adapter Assy.	Stud Kit	RIGHT Side P.T.O. Model	Inter. Torq.	Dir. Rot.	Engine % Hi	Engine % Rev	Filler Block	Adapter Assy.	Stud Kit
ONE SPEED - SINGLE GEAR - MECHANICAL SHIFT															
								100XRAHX-*3 (1)	125	Opp	162		7-A-240(T)	328530-1X	7170-26X
ONE SPEED - TWO GEAR - MECHANICAL SHIFT															
221XCAHX-*5	250	Opp	72		7-A-032(P)(2)	328564X	Furnished	221XCAHX-*3	250	Eng	72		7-A-032(P)(2) 7-A-240(T)	328530-1X	328170-32X
221XEAHX-*5	250	Opp	84			328564X	Furnished	221XEAHX-*3	250	Eng	84		7-A-240(T)	328530-1X	328170-32X
221XLAHX-*5	200	Opp	112			328564X	Furnished	221XLAHX-*3	200	Eng	112		7-A-240(T)	328530-1X	328170-32X
221XPAHX-*5	200	Opp	136			328564X	Furnished	221XPAHX-*3	200	Eng	136		7-A-240(T)	328530-1X	328170-32X
442XAAHX-*5 (3)	250	Opp	64			328564X	Furnished	442KFAHX-*3 (5)	250	Eng	101		7-A-240(T)	328530-1X	328170-168X
442XCAHX-*5 (4)	250	Opp	81			328564X	Furnished	442KHAHX-*3 (6)	250	Eng	117		7-A-240(T)	328530-1X	328170-168X
442XFAHX-*5 (5)	250	Opp	101			328564X	Furnished	442KLAHX-*3 (7)	250	Eng	130		7-A-240(T)	328530-1X	328170-168X
442XHAHX-*5 (6)	250	Opp	117			328564X	Furnished	442KQAHX-*3 (7)	225	Eng	140		7-A-240(T)	328530-1X	328170-168X
442XLAHX-*5 (7)	250	Opp	130			328564X	Furnished	442KRAHX-*3 (7)	225	Eng	162		7-A-240(T)	328530-1X	328170-168X
442XQAHX-*5 (7)	225	Opp	140			328564X	Furnished	442KSAHX-*3 (7)	200	Eng	193		7-A-240(T)	328530-1X	328170-168X
442XRAHX-*5 (7)	225	Opp	162			328564X	Furnished	442KUAHX-*3 (7)	195	Eng	230		7-A-240(T)	328530-1X	328170-168X
442XSAHX-*5 (7)	200	Opp	193			328564X	Furnished	442KWAHX-*3 (7)	175	Eng	271		7-A-240(T)	328530-1X	328170-168X
442XUAHX-*5 (7)	195	Opp	230			328564X	Furnished	442KXAHX-*3 (7)	140	Eng	321		7-A-240(T)	328530-1X	328170-168X
442XWAHX-*5 (7)	175	Opp	271			328564X	Furnished								
442XXAHX-*5 (7)	140	Opp	321			328564X	Furnished								
489XAAHX-*5 (3)	250	Opp	64		8-A-062 8-A-093		328170-8X								
489XCAHX-*5 (4)	250	Opp	81		8-A-062 8-A-093		328170-8X								
489XFAHX-*5 (5)	250	Opp	101		8-A-062 8-A-093		328170-8X								
489XHAHX-*5 (6)	250	Opp	117		8-A-062 8-A-093		328170-8X								
489XLAHX-*5 (7)	250	Opp	130		8-A-062 8-A-093		328170-8X								

Continued Next Page

CAUTION: Do not use geared adapters with 442 "A" and "C" ratios.

CAUTION: 660/680 Series: Applications above 1500 RPM, contact Chelsea Technical Service for approval.

NOTE: All speeds figured with transmission in 4th speed direct. For P.T.O. speeds in other transmission gears, multiply speeds shown by following: 1st. = .1907, 2nd. = .3282, 3rd. = .5780, 5th. = 1.6744.

NOTE: Due to the offset in the 230 Series housing, assembly 5 must be used to obtain proper backlash.

NOTE: The AK & XK output flanges can not be used with the "A" & "C" ratios on the 489 Series P.T.O.s due to mounting stud interference. Use a RA or RB rotatable flange for the XK and the RA for the AK flange.

NOTE: If Ordering the 230/231 Series with the Shaft Brake Option, order the "BA" Output for Automatic Transmissions and the "BD" Output for Manual Transmissions.

(1) Gear and Shaft Kit No. KXA-2-P-565
(2) Filler block furnished with P.T.O.
(3) Input Gear Part No. 5-P-1280
(4) Input Gear Part No. 5-P-1287
(5) Input Gear Part No. 5-P-1077
(6) Input Gear Part No. 5-P-1364
(7) Input Gear Part No. 5-P-1004

Parker Hannifin Corporation
Chelsea Products Division
Olive Branch, MS 38654 USA

TRXL1070	X10710
TRXL1070-A	X10710-A
TRXL10710	
X1070	
X1070-A	

LEFT SIDE ONLY

TRANSMISSION GEAR DATA:
L.H. 8-Bolt Opening Gear FORWARD of Centerline
37 Teeth - SPUR

PITCH LINE TO APERTURE FACE:
.5700" (14.4800MM)

RIGHT SIDE ONLY

TRANSMISSION GEAR DATA:
R.H. 6-Bolt Opening Gear FORWARD of Centerline
37 Teeth - SPUR

PITCH LINE TO APERTURE FACE:
2.8340" (71.9800MM)

Caution: Application Approval Required for P.T.O. Output Shaft Speeds Above 2500 R.P.M.

ONE SPEED - TWO GEAR - MECHANICAL SHIFT

LEFT Side P.T.O. Model	Inter. Torq.	Dir. Rot.	Engine % Hi	Engine % Rev	Filler Block	Adapter Assy.	Stud Kit	RIGHT Side P.T.O. Model	Inter. Torq.	Dir. Rot.	Engine % Hi	Engine % Rev	Filler Block	Adapter Assy.	Stud Kit
489XQAHX-*5 (7)	225	Opp	140		8-A-062 8-A-093		328170-8X								
489XRAHX-*5 (7)	225	Opp	162		8-A-062 8-A-093		328170-8X								
489XSAHX-*5 (7)	200	Opp	193		8-A-062 8-A-093		328170-8X								
489XUAHX-*5 (7)	195	Opp	230		8-A-190(P)		328170-8X								
489XWAHX-*5 (7)	175	Opp	271		8-A-062 8-A-093		328170-8X								
489XXAHX-*5 (7)	140	Opp	321		8-A-062 8-A-093		328170-8X								
680XFAHX-*5 (8)	375	Opp	101		8-A-062 8-A-093		328170-8X								
680XQAHX-*5 (9)	375	Opp	140		8-A-062 8-A-093		328170-8X								
680XSAHX-*5 (10)	325	Opp	193		8-A-062 8-A-093		328170-8X								
823XBAHX-*3 (11)	500	Opp	69		8-A-190		328170-14X								
823XJAHX-*3 (12)	500	Opp	104		8-A-190		328170-14X								
823XMAHX-*3 (13)	500	Opp	122		8-A-190		328170-14X								
823XRAHX-*3 (14)	400	Opp	168		8-A-190		328170-14X								
880XBAHX-*3 (15)	500	Opp	69		8-A-190		328170-14X								
880XDAHX-*3 (16)	500	Opp	81		8-A-190		328170-14X								
880XGAHX-*3 (17)	500	Opp	88		8-A-190		328170-14X								
880XJAHX-*3 (18)	500	Opp	104		8-A-190		328170-14X								
880XMAHX-*3 (19)	500	Opp	122		8-A-190		328170-14X								
880XQAHX-*3 (20)	450	Opp	142		8-A-190		328170-14X								
880XRAHX-*3 (21)	400	Opp	168		8-A-190		328170-14X								
880XTAHX-*3 (22)	350	Opp	217		8-A-190		328170-14X								

Continued Next Page

CAUTION: Do not use geared adapters with 442 "A" and "C" ratios.

CAUTION: 660/680 Series: Applications above 1500 RPM, contact Chelsea Technical Service for approval.

NOTE: All speeds figured with transmission in 4th speed direct. For P.T.O. speeds in other transmission gears, multiply speeds shown by following: 1st. = .1907, 2nd. = .3282, 3rd. = .5780, 5th. = 1.6744.

NOTE: Due to the offset in the 230 Series housing, assembly 5 must be used to obtain proper backlash.

NOTE: The AK & XK output flanges can not be used with the "A" & "C" ratios on the 489 Series P.T.O.s due to mounting stud interference. Use a RA or RB rotatable flange for the XK and the RA for the AK flange.

NOTE: If Ordering the 230/231 Series with the Shaft Brake Option, order the "BA" Output for Automatic Transmissions and the "BD" Output for Manual Transmissions.

(7) Input Gear Part No. 5-P-1004
(8) Input Gear Part No. 5-P-1242
(9) Input Gear Part No. 5-P-1246
(10) Input Gear Part No. 5-P-1322
(11) Input Gear Part No. 5-P-285
(12) Input Gear Part No. 5-P-325
(13) Input Gear Part No. 5-P-283
(14) Input Gear Part No. 5-P-721
(15) Input Gear Part No. 5-P-1100
(16) Input Gear Part No. 5-P-1101
(17) Input Gear Part No. 5-P-1135
(18) Input Gear Part No. 5-P-1102
(19) Input Gear Part No. 5-P-1103
(20) Input Gear Part No. 5-P-1385
(21) Input Gear Part No. 5-P-1104
(22) Input Gear Part No. 5-P-1105

January 2008

Parker Hannifin Corporation
Chelsea Products Division
Olive Branch, MS 38654 USA

TRXL1070	X10710
TRXL1070-A	X10710-A
TRXL10710	
X1070	
X1070-A	

LEFT SIDE ONLY

TRANSMISSION GEAR DATA:
L.H. 8-Bolt Opening Gear FORWARD of Centerline
37 Teeth - SPUR
PITCH LINE TO APERTURE FACE:
.5700" (14.4800MM)

RIGHT SIDE ONLY

TRANSMISSION GEAR DATA:
R.H. 6-Bolt Opening Gear FORWARD of Centerline
37 Teeth - SPUR
PITCH LINE TO APERTURE FACE:
2.8340" (71.9800MM)

Caution: Application Approval Required for P.T.O. Output Shaft Speeds Above 2500 R.P.M.

LEFT Side P.T.O. Model	Inter. Torq.	Dir. Rot.	Engine % Hi	Engine % Rev	Filler Block	Adapter Assy.	Stud Kit	RIGHT Side P.T.O. Model	Inter. Torq.	Dir. Rot.	Engine % Hi	Engine % Rev	Filler Block	Adapter Assy.	Stud Kit
ONE SPEED - TWO GEAR - POWERSHIFT (AIR)															
230XAAJX-*5	250	Opp	53		7-A-032(P)	310778X	Furnished	236KDAHX-*3 (7)	250	Eng	105		7-A-240(T)	328530-1X	328170-168X
230XBAJX-*5	250	Opp	69		7-A-032(P)	310778X	Furnished	236KKAHX-*3 (7)	250	Eng	135		7-A-240(T)	328530-1X	328170-168X
230XDAJX-*5	250	Opp	80		7-A-032(P)	310778X	Furnished	236KQAHX-*3 (7)	250	Eng	182		7-A-240(T)	328530-1X	328170-168X
230XKAJX-*5	250	Opp	108		7-A-032(P)	310778X	Furnished	236KUAHX-*3 (7)	225	Eng	209		7-A-240(T)	328530-1X	328170-168X
230XQAJX-*5	250	Opp	143		7-A-032(P)	310778X	Furnished								
230XUAJX-*5	225	Opp	229		7-A-032(P)	310778X	Furnished								
236XDAHX-*5 (7)	250	Opp	105			328564X	Furnished								
236XKAHX-*5 (7)	250	Opp	135			328564X	Furnished								
236XQAHX-*5 (7)	250	Opp	182			328564X	Furnished								
236XUAHX-*5 (7)	225	Opp	209			328564X	Furnished								
885XBAHX-*3 (15)	500	Opp	69		8-A-190		328170-14X								
885XGAHX-*3 (17)	500	Opp	88		8-A-190		328170-14X								
885XJAHX-*3 (18)	500	Opp	104		8-A-190		328170-14X								
885XMAHX-*3 (19)	500	Opp	122		8-A-190		328170-14X								
ONE SPEED - FORWARD & REVERSE															
340XFAHX-*5 (23)	200	Opp	88	92	7-A-140(P)(2)	328564X	Furnished	340XFAHX-*5 (23)	200	Eng	88	92	7-A-140(P)(2) 7-A-240(T)	328530-1X	328170-168X
352XSAHX-*5 (7)	140	Opp	196	254		328564X	Furnished	352XSAHX-*3 (7)	140	Eng	196	254	7-A-240(T)	328530-1X	328170-168X
863XBAHX-*5	500	Opp	69	85	8-A-190		328170-15X								
ONE SPEED - DUAL SHAFT															
452XSAHX-*3 (7)	140	Opp	196			328564X	Furnished	452XSAHX-*3 (7)	140	Eng	196		7-A-240(T)	328530-1X	328170-168X
GEARED ADAPTERS															
628XAHX-4AH					8-A-190		328170-8X								

CAUTION: Do not use geared adapters with 442 "A" and "C" ratios.

CAUTION: 660/680 Series: Applications above 1500 RPM, contact Chelsea Technical Service for approval.

NOTE: All speeds figured with transmission in 4th speed direct. For P.T.O. speeds in other transmission gears, multiply speeds shown by following: 1st. = .1907, 2nd. = .3282, 3rd. = .5780, 5th. = 1.6744.

NOTE: Due to the offset in the 230 Series housing, assembly 5 must be used to obtain proper backlash.

NOTE: The AK & XK output flanges can not be used with the "A" & "C" ratios on the 489 Series P.T.O.s due to mounting stud interference. Use a RA or RB rotatable flange for the XK and the RA for the AK flange.

NOTE: If Ordering the 230/231 Series with the Shaft Brake Option, order the "BA" Output for Automatic Transmissions and the "BD" Output for Manual Transmissions.

(2) Filler block furnished with P.T.O.
(7) Input Gear Part No. 5-P-1004
(15) Input Gear Part No. 5-P-1100
(17) Input Gear Part No. 5-P-1135
(18) Input Gear Part No. 5-P-1102
(19) Input Gear Part No. 5-P-1103
(23) Input Gear Part No. 5-P-581

Parker Hannifin Corporation
Chelsea Products Division
Olive Branch, MS 38654 USA

107
TRL107

LEFT SIDE ONLY

TRANSMISSION GEAR DATA:
L.H. 8-Bolt Opening Gear FORWARD of Centerline
34 Teeth - SPUR

PITCH LINE TO APERTURE FACE:
.6250" (15.8800MM)

RIGHT SIDE ONLY

TRANSMISSION GEAR DATA:
R.H. 6-Bolt Opening Gear FORWARD of Centerline
34 Teeth - SPUR

PITCH LINE TO APERTURE FACE:
3.0850" (78.3600MM)

Caution: Application Approval Required for P.T.O. Output Shaft Speeds Above 2500 R.P.M.

LEFT Side P.T.O. Model	Inter. Torq.	Dir. Rot.	Engine % Hi	Engine % Rev	Filler Block	Adapter Assy.	Stud Kit	RIGHT Side P.T.O. Model	Inter. Torq.	Dir. Rot.	Engine % Hi	Engine % Rev	Filler Block	Adapter Assy.	Stud Kit
ONE SPEED - SINGLE GEAR - MECHANICAL SHIFT															
100XRAHX-*4 (1)	125	Opp	100			328764X	Furnished	100XRAHX-*3 (1)	125	Opp	72			328530-1X	328291-7X
ONE SPEED - TWO GEAR - MECHANICAL SHIFT															
221XCAHX-*6	250	Eng	45		7-A-032(P)(2)	328764X	Furnished	221XCAHX-*3	250	Eng	32		7-A-032(P)(2)	328530-1X	328170-83X
221XEAHX-*6	250	Eng	52			328764X	Furnished	221XEAHX-*3	250	Eng	37			328530-1X	328170-83X
221XLAHX-*6	200	Eng	69			328764X	Furnished	221XLAHX-*3	200	Eng	50			328530-1X	328170-83X
221XPAHX-*6	200	Eng	84			328764X	Furnished	221XPAHX-*3	200	Eng	60			328530-1X	328170-83X
221ZCAHX-*5	250	Opp	32		7-A-032(P)(2)	328564X	Furnished	442KFAHX-*3 (3)	250	Eng	45			328530-1X	7170-16X
221ZEAHX-*5	250	Opp	37			328564X	Furnished	442KHAHX-*3 (4)	250	Eng	72			328530-1X	7170-16X
221ZLAHX-*5	200	Opp	50			328564X	Furnished	442KLAHX-*3 (5)	250	Eng	58			328530-1X	7170-16X
221ZPAHX-*5	200	Opp	60			328564X	Furnished	442KQAHX-*3 (5)	225	Eng	62			328530-1X	7170-16X
442XFAHX-*6 (3)	250	Eng	62			328764X	Furnished	442KRAHX-*3 (5)	225	Eng	72			328530-1X	7170-16X
442XHAHX-*6 (4)	250	Eng	72			328764X	Furnished	442KSAHX-*3 (5)	200	Eng	86			328530-1X	7170-16X
442XLAHX-*6 (5)	250	Eng	80			328764X	Furnished	442KUAHX-*3 (5)	195	Eng	102			328530-1X	7170-16X
442XQAHX-*6 (5)	225	Eng	87			328764X	Furnished	442KWAHX-*3 (5)	175	Eng	121			328530-1X	7170-16X
442XRAHX-*6 (5)	225	Eng	100			328764X	Furnished	442KXAHX-*3 (5)	140	Eng	143			328530-1X	7170-16X
442XSAHX-*6 (5)	200	Eng	119			328764X	Furnished								
442XUAHX-*6 (5)	195	Eng	142			328764X	Furnished								
442XWAHX-*6 (5)	175	Eng	167			328764X	Furnished								
442XXAHX-*6 (5)	140	Eng	198			328764X	Furnished								
442ZAAHX-*5 (6)	250	Opp	28			328564X	Furnished								
442ZCAHX-*5 (7)	250	Opp	36			328564X	Furnished								
442ZFAHX-*5 (3)	250	Opp	45			328564X	Furnished								
442ZHAHX-*5 (4)	250	Opp	72			328564X	Furnished								
442ZLAHX-*5 (5)	250	Opp	58			328564X	Furnished								
442ZQAHX-*5 (5)	225	Opp	62			328564X	Furnished								
442ZRAHX-*5 (5)	225	Opp	72			328564X	Furnished								
442ZSAHX-*5 (5)	200	Opp	86			328564X	Furnished								
442ZUAHX-*5 (5)	195	Opp	102			328564X	Furnished								

Continued Next Page

CAUTION: 660/680 Series: Applications above 1500 RPM, contact Chelsea Technical Service for approval.

NOTE: The AK & XK output flanges can not be used with the "A" & "C" ratios on the 489 Series P.T.O.s due to mounting stud interference. Use a RA or RB rotatable flange for the XK and the RA for the AK flange.

NOTE: If Ordering the 230/231 Series with the Shaft Brake Option, order the "BA" Output for Automatic Transmissions and the "BD" Output for Manual Transmissions.

(1) Gear and Shaft Kit No. KXA-2-P-565
(2) Filler block furnished with P.T.O.
(3) Input Gear Part No. 5-P-1077
(4) Input Gear Part No. 5-P-1364
(5) Input Gear Part No. 5-P-1004
(6) Input Gear Part No. 5-P-1280
(7) Input Gear Part No. 5-P-1287

107
TRL107

LEFT SIDE ONLY	RIGHT SIDE ONLY
TRANSMISSION GEAR DATA: L.H. 8-Bolt Opening Gear FORWARD of Centerline 34 Teeth - SPUR **PITCH LINE TO APERTURE FACE:** .6250" (15.8800MM)	**TRANSMISSION GEAR DATA:** R.H. 6-Bolt Opening Gear FORWARD of Centerline 34 Teeth - SPUR **PITCH LINE TO APERTURE FACE:** 3.0850" (78.3600MM)

Caution: Application Approval Required for P.T.O. Output Shaft Speeds Above 2500 R.P.M.

ONE SPEED - TWO GEAR - MECHANICAL SHIFT

LEFT Side P.T.O. Model	Inter. Torq.	Dir. Rot.	Engine % Hi	Engine % Rev	Filler Block	Adapter Assy.	Stud Kit	RIGHT Side P.T.O. Model	Inter. Torq.	Dir. Rot.	Engine % Hi	Engine % Rev	Filler Block	Adapter Assy.	Stud Kit
442ZWAHX-*5 (5)	175	Opp	121			328564X	Furnished								
442ZXAHX-*5 (5)	140	Opp	143			328564X	Furnished								
489XAAHX-*5 (6)	250	Opp	28				Furnished								
489XCAHX-*5 (7)	250	Opp	36				Furnished								
489XFAHX-*5 (3)	250	Opp	45				Furnished								
489XHAHX-*5 (4)	250	Opp	72				Furnished								
489XLAHX-*5 (5)	250	Opp	58				Furnished								
489XQAHX-*5 (5)	225	Opp	62				Furnished								
489XRAHX-*5 (5)	225	Opp	72				Furnished								
489XSAHX-*5 (5)	200	Opp	86				Furnished								
489XUAHX-*5 (5)	195	Opp	102				Furnished								
489XWAHX-*5 (5)	175	Opp	121				Furnished								
489XXAHX-*5 (5)	140	Opp	143				Furnished								
680XFAHX-*5 (8)	375	Opp	45				Furnished								
680XQAHX-*5 (9)	375	Opp	62				Furnished								
680XSAHX-*5 (10)	325	Opp	86				Furnished								
823XBAHX-*3 (11)	500	Opp	30				Furnished								
823XJAHX-*3 (12)	500	Opp	46				Furnished								
823XMAHX-*3 (13)	500	Opp	54				Furnished								
823XRAHX-*3 (14)	400	Opp	75				Furnished								
823XTKTX-*3 (15)	350	Opp	90		8-A-165 (2)		Furnished								
880XBAHX-*3 (16)	500	Opp	30				Furnished								
880XJAHX-*3 (17)	500	Opp	46				Furnished								
880XMAHX-*3 (18)	500	Opp	54				Furnished								
880XQAHX-*3 (19)	450	Opp	64				Furnished								
880XRAHX-*3 (20)	400	Opp	75				Furnished								
880XTAHX-*3 (21)	350	Opp	96				Furnished								

Continued Next Page

CAUTION: 660/680 Series: Applications above 1500 RPM, contact Chelsea Technical Service for approval.

NOTE: The AK & XK output flanges can not be used with the "A" & "C" ratios on the 489 Series P.T.O.s due to mounting stud interference. Use a RA or RB rotatable flange for the XK and the RA for the AK flange.

NOTE: If Ordering the 230/231 Series with the Shaft Brake Option, order the "BA" Output for Automatic Transmissions and the "BD" Output for Manual Transmissions.

(2) Filler block furnished with P.T.O.
(3) Input Gear Part No. 5-P-1077
(4) Input Gear Part No. 5-P-1364
(5) Input Gear Part No. 5-P-1004
(6) Input Gear Part No. 5-P-1280
(7) Input Gear Part No. 5-P-1287
(8) Input Gear Part No. 5-P-1242
(9) Input Gear Part No. 5-P-1246
(10) Input Gear Part No. 5-P-1322
(11) Input Gear Part No. 5-P-285
(12) Input Gear Part No. 5-P-325
(13) Input Gear Part No. 5-P-283
(14) Input Gear Part No. 5-P-721
(15) Input Gear Part No. 5-P-1395
(16) Input Gear Part No. 5-P-1100
(17) Input Gear Part No. 5-P-1102
(18) Input Gear Part No. 5-P-1103
(19) Input Gear Part No. 5-P-1385
(20) Input Gear Part No. 5-P-1104
(21) Input Gear Part No. 5-P-1105

Parker Hannifin Corporation
Chelsea Products Division
Olive Branch, MS 38654 USA

107
TRL107

LEFT SIDE ONLY

TRANSMISSION GEAR DATA:
L.H. 8-Bolt Opening Gear FORWARD of Centerline
34 Teeth - SPUR

PITCH LINE TO APERTURE FACE:
.6250" (15.8800MM)

RIGHT SIDE ONLY

TRANSMISSION GEAR DATA:
R.H. 6-Bolt Opening Gear FORWARD of Centerline
34 Teeth - SPUR

PITCH LINE TO APERTURE FACE:
3.0850" (78.3600MM)

Caution: Application Approval Required for P.T.O. Output Shaft Speeds Above 2500 R.P.M.

LEFT Side P.T.O. Model	Inter. Torq.	Dir. Rot.	Engine % Hi	Engine % Rev	Filler Block	Adapter Assy.	Stud Kit	RIGHT Side P.T.O. Model	Inter. Torq.	Dir. Rot.	Engine % Hi	Engine % Rev	Filler Block	Adapter Assy.	Stud Kit
ONE SPEED - TWO GEAR - POWERSHIFT (AIR)															
230XAAJX-*3	250	Opp	24			328481X	Furnished	236KDAHX-*3 (5)	250	Eng	47			328530-1X	7170-16X
230XAAJX-*6	250	Eng	33			328764X	Furnished	236KKAHX-*3 (5)	250	Eng	60			328530-1X	7170-16X
230XBAJX-*3	250	Opp	31			328481X	Furnished	236KQAHX-*3 (5)	250	Eng	81			328530-1X	7170-16X
230XBAJX-*6	250	Eng	42			328764X	Furnished	236KUAHX-*3 (5)	225	Eng	93			328530-1X	7170-16X
230XDAJX-*3	250	Opp	35			328481X	Furnished								
230XDAJX-*6	250	Eng	49			328764X	Furnished								
230XKAJX-*3	250	Opp	48			328481X	Furnished								
230XKAJX-*6	250	Eng	67			328764X	Furnished								
230XQAJX-*3	250	Opp	64			328481X	Furnished								
230XQAJX-*6	250	Eng	89			328764X	Furnished								
230XUAJX-*3	225	Opp	102			328481X	Furnished								
230XUAJX-*6	225	Eng	142			328764X	Furnished								
236XDAHX-*6 (5)	250	Eng	65			328764X	Furnished								
236XKAHX-*6 (5)	250	Eng	83			328764X	Furnished								
236XQAHX-*6 (5)	250	Eng	112			328764X	Furnished								
236XUAHX-*6 (5)	225	Eng	129			328764X	Furnished								
236ZDAHX-*5 (5)	250	Opp	47			328564X	Furnished								
236ZKAHX-*5 (5)	250	Opp	60			328564X	Furnished								
236ZQAHX-*5 (5)	250	Opp	81			328564X	Furnished								
236ZUAHX-*5 (5)	225	Opp	93			328564X	Furnished								
885XBAHX-*3 (16)	500	Opp	30				Furnished								
885XJAHX-*3 (17)	500	Opp	46				Furnished								
885XMAHX-*3 (18)	500	Opp	54				Furnished								
ONE SPEED - FORWARD & REVERSE															
340SFAHX-*5 (22)	200	Opp	39	41	7-A-140 (23)	310778X	Furnished	340XFAHX-*5 (22)	200	Eng	39	41	7-A-140(P)(2)	328530-1X	7170-16X
352XSAHX-*6 (5)	140	Eng	121	157		328764X	Furnished	352XSAHX-*3 (5)	140	Eng	87	113		328530-1X	7170-16X
352ZSAHX-*5 (5)	140	Opp	87	113		328564X	Furnished								
863XBAHX-*5	500	Opp	30	38			Furnished								

Continued Next Page

CAUTION: 660/680 Series: Applications above 1500 RPM, contact Chelsea Technical Service for approval.

NOTE: The AK & XK output flanges can not be used with the "A" & "C" ratios on the 489 Series P.T.O.s due to mounting stud interference. Use a RA or RB rotatable flange for the XK and the RA for the AK flange.

NOTE: If Ordering the 230/231 Series with the Shaft Brake Option, order the "BA" Output for Automatic Transmissions and the "BD" Output for Manual Transmissions.

(2) Filler block furnished with P.T.O.
(5) Input Gear Part No. 5-P-1004
(16) Input Gear Part No. 5-P-1100
(17) Input Gear Part No. 5-P-1102
(18) Input Gear Part No. 5-P-1103
(22) Input Gear Part No. 5-P-581
(23) Filler block furnished with P.T.O. but not required

Parker Hannifin Corporation
Chelsea Products Division
Olive Branch, MS 38654 USA

107
TRL107

LEFT SIDE ONLY	RIGHT SIDE ONLY
TRANSMISSION GEAR DATA: L.H. 8-Bolt Opening Gear FORWARD of Centerline 34 Teeth - SPUR **PITCH LINE TO APERTURE FACE:** .6250" (15.8800MM)	**TRANSMISSION GEAR DATA:** R.H. 6-Bolt Opening Gear FORWARD of Centerline 34 Teeth - SPUR **PITCH LINE TO APERTURE FACE:** 3.0850" (78.3600MM)

Caution: Application Approval Required for P.T.O. Output Shaft Speeds Above 2500 R.P.M.

LEFT Side P.T.O. Model	Inter. Torq.	Dir. Rot.	Engine % Hi	Engine % Rev	Filler Block	Adapter Assy.	Stud Kit	RIGHT Side P.T.O. Model	Inter. Torq.	Dir. Rot.	Engine % Hi	Engine % Rev	Filler Block	Adapter Assy.	Stud Kit
ONE SPEED - DUAL SHAFT															
452XSAHX-*6 (5)	140	Eng	121			328764X	Furnished	452XSAHX-*3 (5)	140	Eng	87			328530-1X	7170-16X
452ZSAHX-*3 (5)	140	Opp	87			328564X	Furnished								
GEARED ADAPTERS															
628XAHX-4AH							Furnished								

CAUTION: 660/680 Series: Applications above 1500 RPM, contact Chelsea Technical Service for approval.

NOTE: The AK & XK output flanges can not be used with the "A" & "C" ratios on the 489 Series P.T.O.s due to mounting stud interference. Use a RA or RB rotatable flange for the XK and the RA for the AK flange.

NOTE: If Ordering the 230/231 Series with the Shaft Brake Option, order the "BA" Output for Automatic Transmissions and the "BD" Output for Manual Transmissions.

(5) Input Gear Part No. 5-P-1004

Parker Hannifin Corporation
Chelsea Products Division
Olive Branch, MS 38654 USA

2090	T2180	T310-MLR	T318L
T2090	T2180-B	T313L	T318L21
T2090-L	T309	T313L21	T318LR
T2130	T309L	T313LR	T318LR21
T2130-B	T309LR	T313LR21	TM308M

LEFT SIDE ONLY

TRANSMISSION GEAR DATA:
L.H. 8-Bolt Opening Gear FORWARD of Centerline
54 Teeth - SPUR

PITCH LINE TO APERTURE FACE:
.8100" (20.5700MM)

RIGHT SIDE ONLY

TRANSMISSION GEAR DATA:
R.H. 6-Bolt Opening Gear FORWARD of Centerline
54 Teeth - SPUR

PITCH LINE TO APERTURE FACE:
1.0850" (27.5600MM)

Caution: Application Approval Required for P.T.O. Output Shaft Speeds Above 2500 R.P.M.

LEFT Side P.T.O. Model	Inter. Torq.	Dir. Rot.	Engine % Hi	Engine % Rev	Filler Block	Adapter Assy.	Stud Kit	RIGHT Side P.T.O. Model	Inter. Torq.	Dir. Rot.	Engine % Hi	Engine % Rev	Filler Block	Adapter Assy.	Stud Kit
ONE SPEED - SINGLE GEAR - MECHANICAL SHIFT															
812XKDAX-*5	400	Eng	97				Furnished	100XRAHX-*3 (1)	125	Opp	150			328554-2X	Furnished
ONE SPEED - TWO GEAR - MECHANICAL SHIFT															
221ZCDAX-*5	250	Opp	68			328564X	Furnished	221XCAHX-*3	250	Eng	67		7-A-032(P)(2)	328554-2X	Furnished
221ZEDAX-*5	250	Opp	75			328564X	Furnished	221XEAHX-*3	250	Eng	77			328554-2X	Furnished
221ZLDAX-*5	200	Opp	101			328564X	Furnished	221XLAHX-*3	200	Eng	104			328554-2X	Furnished
221ZPDAX-*5	200	Opp	122			328564X	Furnished	221XPAHX-*3	200	Eng	125			328554-2X	Furnished
442ZADAX-*5 (6)	250	Opp	59		7-A-062(P)	328481X	Furnished	221XCDAX-*3	250	Opp	68				Furnished
442ZCDAX-*5 (7)	250	Opp	76		7-A-062(P)	328481X	Furnished	221XEDAX-*3	250	Opp	75				Furnished
442ZFDAX-*5 (8)	250	Opp	94		7-A-062(P)	328481X	Furnished	221XLDAX-*3	200	Opp	101				Furnished
442ZHDAX-*5 (4)	250	Opp	109		7-A-062(P)	328481X	Furnished	221XPDAX-*3	200	Opp	122				Furnished
442ZLDAX-*5 (9)	250	Opp	121		7-A-062(P)	328481X	Furnished	442XFAHX-*3 (3)	250	Eng	93			328554-2X	Furnished
442ZQDAX-*5 (9)	225	Opp	130		7-A-062(P)	328481X	Furnished	442XHAHX-*3 (4)	250	Eng	109			328554-2X	Furnished
442ZRDAX-*5 (9)	225	Opp	151		7-A-062(P)	328481X	Furnished	442XLAHX-*3 (5)	250	Eng	120			328554-2X	Furnished
442ZSDAX-*5 (9)	200	Opp	180		7-A-062(P)	328481X	Furnished	442XQAHX-*3 (5)	225	Eng	130			328554-2X	Furnished
442ZUDAX-*5 (9)	195	Opp	214		7-A-062(P)	328481X	Furnished	442XRAHX-*3 (5)	225	Eng	150			328554-2X	Furnished
442ZWDAX-*5 (9)	175	Opp	252		7-A-032(P)	328481X	Furnished	442XSAHX-*3 (5)	200	Eng	179			328554-2X	Furnished
442ZXDAX-*5 (9)	140	Opp	298		7-A-062(P)	328481X	Furnished	442XUAHX-*3 (5)	195	Eng	213			328554-2X	Furnished
489ZADAX-*5 (6)	250	Opp	59				Furnished	442XWAHX-*3 (5)	175	Eng	250			328554-2X	Furnished
489ZCDAX-*5 (7)	250	Opp	76				Furnished	442XXAHX-*3 (5)	140	Eng	296			328554-2X	Furnished
489ZFDAX-*5 (8)	250	Opp	94				Furnished	442ZADAX-*3 (6)	250	Opp	59		7-A-062		Furnished
489ZHDAX-*5 (4)	250	Opp	109				Furnished	442ZCDAX-*3 (7)	250	Opp	76		7-A-062		Furnished
489ZLDAX-*5 (9)	250	Opp	121				Furnished	442ZFDAX-*3 (8)	250	Opp	94		7-A-062		Furnished
489ZQDAX-*5 (9)	225	Opp	130				Furnished	442ZHDAX-*3 (4)	250	Opp	109		7-A-062		Furnished
489ZRDAX-*5 (9)	225	Opp	151				Furnished	442ZLDAX-*3 (9)	250	Opp	121		7-A-062		Furnished
489ZSDAX-*5 (9)	200	Opp	180				Furnished	442ZQDAX-*3 (9)	225	Opp	130		7-A-062		Furnished
489ZUDAX-*5 (9)	195	Opp	214				Furnished	442ZRDAX-*3 (9)	225	Opp	151		7-A-062		Furnished
489ZWDAX-*5 (9)	175	Opp	252				Furnished	442ZSDAX-*3 (9)	200	Opp	180		7-A-062		Furnished
489ZXDAX-*5 (9)	140	Opp	298				Furnished	442ZUDAX-*3 (9)	195	Opp	214		7-A-062		Furnished

Continued Next Page

CAUTION: Do not use geared adapters with 442 "A" and "C" ratios.

CAUTION: 660/680 Series: Applications above 1500 RPM, contact Chelsea Technical Service for approval.

NOTE: Using the 328554-2X adapter will permit P.T.O. installation on trucks with set back front axle.

NOTE: The 812 Series with a direct mount pump flange or a universal joint larger than the 1000 series will interfere with the reverse idler bulge.

NOTE: The AK & XK output flanges can not be used with the "A" & "C" ratios on the 489 Series PTOs due to mounting stud interference. Use a RA or RB rotatable flange for the XK and the RA for the AK flange.

(1) Gear and Shaft Kit No. KXA-2-P-565
(2) Filler block furnished with P.T.O.
(3) Input Gear Part No. 5-P-1077
(4) Input Gear Part No. 5-P-1365
(5) Input Gear Part No. 5-P-1004
(6) Input Gear Part No. 5-P-1284
(7) Input Gear Part No. 5-P-1291
(8) Input Gear Part No. 5-P-1085
(9) Input Gear Part No. 5-P-1037

Parker Hannifin Corporation
Chelsea Products Division
Olive Branch, MS 38654 USA

2090	T2180	T310-MLR	T318L
T2090	T2180-B	T313L	T318L21
T2090-L	T309	T313L21	T318LR
T2130	T309L	T313LR	T318LR21
T2130-B	T309LR	T313LR21	TM308M

LEFT SIDE ONLY

TRANSMISSION GEAR DATA:
L.H. 8-Bolt Opening Gear FORWARD of Centerline
54 Teeth - SPUR
PITCH LINE TO APERTURE FACE:
.8100" (20.5700MM)

RIGHT SIDE ONLY

TRANSMISSION GEAR DATA:
R.H. 6-Bolt Opening Gear FORWARD of Centerline
54 Teeth - SPUR
PITCH LINE TO APERTURE FACE:
1.0850" (27.5600MM)

Caution: Application Approval Required for P.T.O. Output Shaft Speeds Above 2500 R.P.M.

LEFT Side P.T.O. Model	Inter. Torq.	Dir. Rot.	Engine % Hi	Engine % Rev	Filler Block	Adapter Assy.	Stud Kit	RIGHT Side P.T.O. Model	Inter. Torq.	Dir. Rot.	Engine % Hi	Engine % Rev	Filler Block	Adapter Assy.	Stud Kit
ONE SPEED - TWO GEAR - MECHANICAL SHIFT															
680ZFDAX-*5 (10)	375	Opp	94				Furnished	442ZWDAX-*3 (9)	175	Opp	252		7-A-062		Furnished
680ZQDAX-*5 (11)	375	Opp	130				Furnished	442ZXDAX-*3 (9)	140	Opp	298		7-A-062		Furnished
680ZSDAX-*5 (12)	325	Opp	180				Furnished	660ZFDAX-*3 (10)	375	Opp	94		7-A-062		Furnished
823XBDAX-*5 (13)	500	Opp	61				Furnished	660ZQDAX-*3 (11)	375	Opp	130		7-A-062		Furnished
823XMDAX-*5 (14)	500	Opp	108				Furnished	660ZSDAX-*3 (12)	325	Opp	180		7-A-062		Furnished
823XRDAX-*5 (15)	400	Opp	150				Furnished								
880XBDAX-*5 (16)	500	Opp	61				Furnished								
880XGDAX-*5 (17)	500	Opp	78				Furnished								
880XMDAX-*5 (18)	500	Opp	108				Furnished								
880XRDAX-*5 (19)	400	Opp	150				Furnished								
880XTDAX-*5 (20)	350	Opp	193				Furnished								
ONE SPEED - TWO GEAR - POWERSHIFT (AIR)															
230XADAX-*5	250	Opp	48			328481X	Furnished	230XADAX-*3	250	Opp	48				Furnished
230XBDAX-*5	250	Opp	62			328481X	Furnished	230XBDAX-*3	250	Opp	62				Furnished
230XDDAX-*5	250	Opp	72			328481X	Furnished	230XDDAX-*3	250	Opp	72				Furnished
230XKDAX-*5 (21)	250	Opp	97			328481X	Furnished	230XKDAX-*3 (21)	250	Opp	97				Furnished
230XQDAX-*5 (22)	250	Opp	129			328481X	Furnished	230XQDAX-*3 (22)	250	Opp	129				Furnished
236ZDDAX-*5 (9)	250	Opp	98		7-A-062(P)	328481X	Furnished	236XDAHX-*3 (5)	250	Eng	97			328554-2X	Furnished
236ZKDAX-*5 (9)	250	Opp	126		7-A-062(P)	328481X	Furnished	236XKAHX-*3 (5)	250	Eng	125			328554-2X	Furnished
236ZQDAX-*5 (9)	250	Opp	169		7-A-032(P)	328481X	Furnished	236XQAHX-*3 (5)	250	Eng	168			328554-2X	Furnished
236ZUDAX-*5 (9)	225	Opp	194		7-A-062(P)	328481X	Furnished	236XUAHX-*3 (5)	225	Eng	192			328554-2X	Furnished
885XBDAX-*5 (16)	500	Opp	61				Furnished	236ZDDAX-*3 (9)	250	Opp	98		7-A-062		Furnished
885XGDAX-*5 (17)	500	Opp	78				Furnished	236ZKDAX-*3 (9)	250	Opp	126		7-A-062		Furnished
885XMDAX-*5 (18)	500	Opp	108				Furnished	236ZQDAX-*3 (9)	250	Opp	169		7-A-062		Furnished
								236ZUDAX-*3 (9)	225	Opp	194		7-A-062		Furnished
ONE SPEED - FORWARD & REVERSE															
340SFDAX-*5 (23)	200	Opp	85	90		328481X	Furnished	340SFDAX-*5 (23)	200	Opp	85	90			Furnished

Continued Next Page

CAUTION: Do not use geared adapters with 442 "A" and "C" ratios.

CAUTION: 660/680 Series: Applications above 1500 RPM, contact Chelsea Technical Service for approval.

NOTE: Using the 328554-2X adapter will permit P.T.O. installation on trucks with set back front axle.

NOTE: The 812 Series with a direct mount pump flange or a universal joint larger than the 1000 series will interfere with the reverse idler bulge.

NOTE: The AK & XK output flanges can not be used with the "A" & "C" ratios on the 489 Series PTOs due to mounting stud interference. Use a RA or RB rotatable flange for the XK and the RA for the AK flange.

(5) Input Gear Part No. 5-P-1004
(9) Input Gear Part No. 5-P-1037
(10) Input Gear Part No. 5-P-1330
(11) Input Gear Part No. 5-P-1331
(12) Input Gear Part No. 5-P-1332
(13) Input Gear Part No. 5-P-636
(14) Input Gear Part No. 5-P-637
(15) Input Gear Part No. 5-P-808
(16) Input Gear Part No. 5-P-1120
(17) Input Gear Part No. 5-P-1174
(18) Input Gear Part No. 5-P-1121
(19) Input Gear Part No. 5-P-1122
(20) Input Gear Part No. 5-P-1123
(21) Input Gear Part No. 5-P--P-843
(22) Input Gear Part No. 5-P--P-844
(23) Input Gear Part No. 5-P-634

Parker Hannifin Corporation
Chelsea Products Division
Olive Branch, MS 38654 USA

2090	T2180	T310-MLR	T318L
T2090	T2180-B	T313L	T318L21
T2090-L	T309	T313L21	T318LR
T2130	T309L	T313LR	T318LR21
T2130-B	T309LR	T313LR21	TM308M

LEFT SIDE ONLY

TRANSMISSION GEAR DATA:
L.H. 8-Bolt Opening Gear FORWARD of Centerline
54 Teeth - SPUR

PITCH LINE TO APERTURE FACE:
.8100" (20.5700MM)

RIGHT SIDE ONLY

TRANSMISSION GEAR DATA:
R.H. 6-Bolt Opening Gear FORWARD of Centerline
54 Teeth - SPUR

PITCH LINE TO APERTURE FACE:
1.0850" (27.5600MM)

Caution: Application Approval Required for P.T.O. Output Shaft Speeds Above 2500 R.P.M.

LEFT Side P.T.O. Model	Inter. Torq.	Dir. Rot.	Engine % Hi	Engine % Rev	Filler Block	Adapter Assy.	Stud Kit	RIGHT Side P.T.O. Model	Inter. Torq.	Dir. Rot.	Engine % Hi	Engine % Rev	Filler Block	Adapter Assy.	Stud Kit
ONE SPEED - FORWARD & REVERSE															
863XBDAX-*5	500	Opp	61	75			Furnished	352XSAHX-*3 (5)	140	Eng	181	234		328554-2X	Furnished
ONE SPEED - DUAL SHAFT															
								452XSAHX-*3 (5)	140	Eng	181			328554-2X	Furnished
GEARED ADAPTERS															
628ZDAX-5DA		Eng					Furnished	626ZDAX-3DA		Eng			7-A-062		Furnished
								630ZDAX-3DA		Eng			7-A-062		Furnished
								645ZDAX-3DA		Eng			7-A-062		Furnished

CAUTION: Do not use geared adapters with 442 "A" and "C" ratios.

CAUTION: 660/680 Series: Applications above 1500 RPM, contact Chelsea Technical Service for approval.

NOTE: Using the 328554-2X adapter will permit P.T.O. installation on trucks with set back front axle.

NOTE: The 812 Series with a direct mount pump flange or a universal joint larger than the 1000 series will interfere with the reverse idler bulge.

NOTE: The AK & XK output flanges can not be used with the "A" & "C" ratios on the 489 Series PTOs due to mounting stud interference. Use a RA or RB rotatable flange for the XK and the RA for the AK flange.

(5) Input Gear Part No. 5-P-1004

2100
T2100
T2110-B

LEFT SIDE ONLY

TRANSMISSION GEAR DATA:
L.H. 8-Bolt Opening Gear FORWARD of Centerline
54 Teeth - SPUR
PITCH LINE TO APERTURE FACE:
.8100" (20.5700MM)

RIGHT SIDE ONLY

TRANSMISSION GEAR DATA:
R.H. 6-Bolt Opening Gear FORWARD of Centerline
54 Teeth - SPUR
PITCH LINE TO APERTURE FACE:
1.0850" (27.5600MM)

Caution: Application Approval Required for P.T.O. Output Shaft Speeds Above 2500 R.P.M.

LEFT Side P.T.O. Model	Inter. Torq.	Dir. Rot.	Engine % Hi	Engine % Rev	Filler Block	Adapter Assy.	Stud Kit	RIGHT Side P.T.O. Model	Inter. Torq.	Dir. Rot.	Engine % Hi	Engine % Rev	Filler Block	Adapter Assy.	Stud Kit
ONE SPEED - SINGLE GEAR - MECHANICAL SHIFT															
812XKDAX-*5	400	Eng	90				Furnished	100XRAHX-*3 (1)	125	Opp	139			328554-2X	Furnished
ONE SPEED - TWO GEAR - MECHANICAL SHIFT															
221ZCDAX-*5	250	Opp	63			328564X	Furnished	221XCAHX-*3	250	Eng	62		7-A-032(P)(2)	328554-2X	Furnished
221ZEDAX-*5	250	Opp	70			328564X	Furnished	221XEAHX-*3	250	Eng	72			328554-2X	Furnished
221ZLDAX-*5	200	Opp	94			328564X	Furnished	221XLAHX-*3	200	Eng	96			328554-2X	Furnished
221ZPDAX-*5	200	Opp	113			328564X	Furnished	221XPAHX-*3	200	Eng	116			328554-2X	Furnished
442ZADAX-*5 (6)	250	Opp	55		7-A-062(P)	328481X	Furnished	221XCDAX-*3	250	Opp	63				Furnished
442ZCDAX-*5 (7)	250	Opp	70		7-A-062(P)	328481X	Furnished	221XEDAX-*3	250	Opp	70				Furnished
442ZFDAX-*5 (8)	250	Opp	87		7-A-062(P)	328481X	Furnished	221XLDAX-*3	200	Opp	94				Furnished
442ZHDAX-*5 (4)	250	Opp	101		7-A-062(P)	328481X	Furnished	221XPDAX-*3	200	Opp	113				Furnished
442ZLDAX-*5 (9)	250	Opp	113		7-A-062(P)	328481X	Furnished	442XFAHX-*3 (3)	250	Eng	86			328554-2X	Furnished
442ZQDAX-*5 (9)	225	Opp	121		7-A-062(P)	328481X	Furnished	442XHAHX-*3 (4)	250	Eng	101			328554-2X	Furnished
442ZRDAX-*5 (9)	225	Opp	140		7-A-062(P)	328481X	Furnished	442XLAHX-*3 (5)	250	Eng	112			328554-2X	Furnished
442ZSDAX-*5 (9)	200	Opp	167		7-A-062(P)	328481X	Furnished	442XQAHX-*3 (5)	225	Eng	120			328554-2X	Furnished
442ZUDAX-*5 (9)	195	Opp	199		7-A-062(P)	328481X	Furnished	442XRAHX-*3 (5)	225	Eng	139			328554-2X	Furnished
442ZWDAX-*5 (9)	175	Opp	234		7-A-062(P)	328481X	Furnished	442XSAHX-*3 (5)	200	Eng	166			328554-2X	Furnished
442ZXDAX-*5 (9)	140	Opp	277		7-A-062(P)	328481X	Furnished	442XUAHX-*3 (5)	195	Eng	198			328554-2X	Furnished
489ZADAX-*5 (6)	250	Opp	55				Furnished	442XWAHX-*3 (5)	175	Eng	233			328554-2X	Furnished
489ZCDAX-*5 (7)	250	Opp	70				Furnished	442XXAHX-*3 (5)	140	Eng	275			328554-2X	Furnished
489ZFDAX-*5 (8)	250	Opp	87				Furnished	442ZADAX-*3 (6)	250	Opp	55		7-A-062		Furnished
489ZHDAX-*5 (4)	250	Opp	101				Furnished	442ZCDAX-*3 (7)	250	Opp	70		7-A-062		Furnished
489ZLDAX-*5 (9)	250	Opp	113				Furnished	442ZFDAX-*3 (8)	250	Opp	87		7-A-062		Furnished
489ZQDAX-*5 (9)	225	Opp	121				Furnished	442ZHDAX-*3 (4)	250	Opp	101		7-A-062		Furnished
489ZRDAX-*5 (9)	225	Opp	140				Furnished	442ZLDAX-*3 (9)	250	Opp	113		7-A-062		Furnished
489ZSDAX-*5 (9)	200	Opp	167				Furnished	442ZQDAX-*3 (9)	225	Opp	121		7-A-062		Furnished
489ZUDAX-*5 (9)	195	Opp	199				Furnished	442ZRDAX-*3 (9)	225	Opp	140		7-A-062		Furnished
489ZWDAX-*5 (9)	175	Opp	234				Furnished	442ZSDAX-*3 (9)	200	Opp	167		7-A-062		Furnished
489ZXDAX-*5 (9)	140	Opp	277				Furnished	442ZUDAX-*3 (9)	195	Opp	199		7-A-062		Furnished

Continued Next Page

CAUTION: Do not use geared adapters with 442 "A" and "C" ratios.

CAUTION: 660/680 Series: Applications above 1500 RPM, contact Chelsea Technical Service for approval.

NOTE: Using the 328554-2X adapter will permit P.T.O. installation on trucks with set back front axle.

NOTE: The 812 Series with a direct mount pump flange or a universal joint larger than the 1000 series will interfere with the reverse idler bulge.

NOTE: The AK & XK output flanges can not be used with the "A" & "C" ratios on the 489 Series PTOs due to mounting stud interference. Use a RA or RB rotatable flange for the XK and the RA for the AK flange.

(1) Gear and Shaft Kit No. KXA-2-P-565
(2) Filler block furnished with P.T.O.
(3) Input Gear Part No. 5-P-1077
(4) Input Gear Part No. 5-P-1365
(5) Input Gear Part No. 5-P-1004
(6) Input Gear Part No. 5-P-1284
(7) Input Gear Part No. 5-P-1291
(8) Input Gear Part No. 5-P-1085
(9) Input Gear Part No. 5-P-1037

Parker Hannifin Corporation
Chelsea Products Division
Olive Branch, MS 38654 USA

2100
T2100
T2110-B

LEFT SIDE ONLY

TRANSMISSION GEAR DATA:
L.H. 8-Bolt Opening Gear FORWARD of Centerline
54 Teeth - SPUR

PITCH LINE TO APERTURE FACE:
.8100" (20.5700MM)

RIGHT SIDE ONLY

TRANSMISSION GEAR DATA:
R.H. 6-Bolt Opening Gear FORWARD of Centerline
54 Teeth - SPUR

PITCH LINE TO APERTURE FACE:
1.0850" (27.5600MM)

Caution: Application Approval Required for P.T.O. Output Shaft Speeds Above 2500 R.P.M.

LEFT Side P.T.O. Model	Inter. Torq.	Dir. Rot.	Engine % Hi	Engine % Rev	Filler Block	Adapter Assy.	Stud Kit	RIGHT Side P.T.O. Model	Inter. Torq.	Dir. Rot.	Engine % Hi	Engine % Rev	Filler Block	Adapter Assy.	Stud Kit
ONE SPEED - TWO GEAR - MECHANICAL SHIFT															
680ZFDAX-*5 (10)	375	Opp	87				Furnished	442ZWDAX-*3 (9)	175	Opp	234		7-A-062		Furnished
680ZQDAX-*5 (11)	375	Opp	121				Furnished	442ZXDAX-*3 (9)	140	Opp	277		7-A-062		Furnished
680ZSDAX-*5 (12)	325	Opp	167				Furnished	660ZFDAX-*3 (10)	375	Opp	87		7-A-062		Furnished
823XBDAX-*5 (13)	500	Opp	57				Furnished	660ZQDAX-*3 (11)	375	Opp	121		7-A-062		Furnished
823XMDAX-*5 (14)	500	Opp	101				Furnished	660ZSDAX-*3 (12)	325	Opp	167		7-A-062		Furnished
823XRDAX-*5 (15)	400	Opp	139				Furnished								
880XBDAX-*5 (16)	500	Opp	57				Furnished								
880XGDAX-*5 (17)	500	Opp	73				Furnished								
880XMDAX-*5 (18)	500	Opp	101				Furnished								
880XRDAX-*5 (19)	400	Opp	139				Furnished								
880XTDAX-*5 (20)	350	Opp	179				Furnished								
ONE SPEED - TWO GEAR - POWERSHIFT (AIR)															
230XADAX-*5	250	Opp	44			328481X	Furnished	230XADAX-*3	250	Opp	44				Furnished
230XBDAX-*5	250	Opp	58			328481X	Furnished	230XBDAX-*3	250	Opp	58				Furnished
230XDDAX-*5	250	Opp	67			328481X	Furnished	230XDDAX-*3	250	Opp	67				Furnished
230XKDAX-*5 (21)	250	Opp	90			328481X	Furnished	230XKDAX-*3 (21)	250	Opp	90				Furnished
230XQDAX-*5 (22)	250	Opp	120			328481X	Furnished	230XQDAX-*3 (22)	250	Opp	120				Furnished
236ZDDAX-*5 (9)	250	Opp	92		7-A-062(P)	328481X	Furnished	236XDAHX-*3 (5)	250	Eng	91			328554-2X	Furnished
236ZKDAX-*5 (9)	250	Opp	116		7-A-062(P)	328481X	Furnished	236XKAHX-*3 (5)	250	Eng	116			328554-2X	Furnished
236ZQDAX-*5 (9)	250	Opp	157		7-A-062(P)	328481X	Furnished	236XQAHX-*3 (5)	250	Eng	156			328554-2X	Furnished
236ZUDAX-*5 (9)	225	Opp	180		7-A-062(P)	328481X	Furnished	236XUAHX-*3 (5)	225	Eng	179			328554-2X	Furnished
885XBDAX-*5 (16)	500	Opp	57				Furnished	236ZDDAX-*3 (9)	250	Opp	92		7-A-062		Furnished
885XGDAX-*5 (17)	500	Opp	73				Furnished	236ZKDAX-*3 (9)	250	Opp	116		7-A-062		Furnished
885XMDAX-*5 (18)	500	Opp	101				Furnished	236ZQDAX-*3 (9)	250	Opp	157		7-A-062		Furnished
								236ZUDAX-*3 (9)	225	Opp	180		7-A-062		Furnished
ONE SPEED - FORWARD & REVERSE															
340SFDAX-*5 (23)	200	Opp	79	83		328481X	Furnished	340SFDAX-*5 (23)	200	Opp	79	83			Furnished

Continued Next Page

CAUTION: Do not use geared adapters with 442 "A" and "C" ratios.

CAUTION: 660/680 Series: Applications above 1500 RPM, contact Chelsea Technical Service for approval.

NOTE: Using the 328554-2X adapter will permit P.T.O. installation on trucks with set back front axle.

NOTE: The 812 Series with a direct mount pump flange or a universal joint larger than the 1000 series will interfere with the reverse idler bulge.

NOTE: The AK & XK output flanges can not be used with the "A" & "C" ratios on the 489 Series PTOs due to mounting stud interference. Use a RA or RB rotatable flange for the XK and the RA for the AK flange.

(5) Input Gear Part No. 5-P-1004
(9) Input Gear Part No. 5-P-1037
(10) Input Gear Part No. 5-P-1330
(11) Input Gear Part No. 5-P-1331
(12) Input Gear Part No. 5-P-1332
(13) Input Gear Part No. 5-P-636
(14) Input Gear Part No. 5-P-637
(15) Input Gear Part No. 5-P-808
(16) Input Gear Part No. 5-P-1120
(17) Input Gear Part No. 5-P-1174
(18) Input Gear Part No. 5-P-1121
(19) Input Gear Part No. 5-P-1122
(20) Input Gear Part No. 5-P-1123
(21) Input Gear Part No. 5-P--P-843
(22) Input Gear Part No. 5-P--P-844
(23) Input Gear Part No. 5-P-634

January 2008

Parker Hannifin Corporation
Chelsea Products Division
Olive Branch, MS 38654 USA

2100
T2100
T2110-B

LEFT SIDE ONLY

TRANSMISSION GEAR DATA:
L.H. 8-Bolt Opening Gear FORWARD of Centerline
54 Teeth - SPUR

PITCH LINE TO APERTURE FACE:
.8100" (20.5700MM)

RIGHT SIDE ONLY

TRANSMISSION GEAR DATA:
R.H. 6-Bolt Opening Gear FORWARD of Centerline
54 Teeth - SPUR

PITCH LINE TO APERTURE FACE:
1.0850" (27.5600MM)

Caution: Application Approval Required for P.T.O. Output Shaft Speeds Above 2500 R.P.M.

LEFT Side P.T.O. Model	Inter. Torq.	Dir. Rot.	Engine % Hi	Engine % Rev	Filler Block	Adapter Assy.	Stud Kit	RIGHT Side P.T.O. Model	Inter. Torq.	Dir. Rot.	Engine % Hi	Engine % Rev	Filler Block	Adapter Assy.	Stud Kit
ONE SPEED - FORWARD & REVERSE															
863XBDAX-*5	500	Opp	57	70			Furnished	352XSAHX-*3 (5)	140	Eng	168	217		328554-2X	Furnished
ONE SPEED - DUAL SHAFT															
								452XSAHX-*3 (5)	140	Eng	168			328554-2X	Furnished
GEARED ADAPTERS															
628ZDAX-5DA		Eng					Furnished	626ZDAX-3DA		Eng			7-A-062		Furnished
								630ZDAX-3DA		Eng			7-A-062		Furnished
								645ZDAX-3DA		Eng			7-A-062		Furnished

CAUTION: Do not use geared adapters with 442 "A" and "C" ratios.

CAUTION: 660/680 Series: Applications above 1500 RPM, contact Chelsea Technical Service for approval.

NOTE: Using the 328554-2X adapter will permit P.T.O. installation on trucks with set back front axle.

NOTE: The 812 Series with a direct mount pump flange or a universal joint larger than the 1000 series will interfere with the reverse idler bulge.

NOTE: The AK & XK output flanges can not be used with the "A" & "C" ratios on the 489 Series PTOs due to mounting stud interference. Use a RA or RB rotatable flange for the XK and the RA for the AK flange.

(5) Input Gear Part No. 5-P-1004

Parker Hannifin Corporation
Chelsea Products Division
Olive Branch, MS 38654 USA

2050	T2070-A	T305	T308M
2060	T2070-B	T306	TX2060
T2050	T2070-F	T307	X2060
T2060	T2080	T307M	
T2070	T2080-B	T308	

LEFT SIDE ONLY

TRANSMISSION GEAR DATA:
L.H. 8-Bolt Opening Gear FORWARD of Centerline
54 Teeth - SPUR

PITCH LINE TO APERTURE FACE:
.8100" (20.5700MM)

RIGHT SIDE ONLY

TRANSMISSION GEAR DATA:
R.H. 6-Bolt Opening Gear FORWARD of Centerline
54 Teeth - SPUR

PITCH LINE TO APERTURE FACE:
1.0850" (27.5600MM)

Caution: Application Approval Required for P.T.O. Output Shaft Speeds Above 2500 R.P.M.

LEFT Side P.T.O. Model	Inter. Torq.	Dir. Rot.	Engine % Hi	Engine % Rev	Filler Block	Adapter Assy.	Stud Kit	RIGHT Side P.T.O. Model	Inter. Torq.	Dir. Rot.	Engine % Hi	Engine % Rev	Filler Block	Adapter Assy.	Stud Kit
ONE SPEED - SINGLE GEAR - MECHANICAL SHIFT															
812XKDAX-*5	400	Eng	116				Furnished	100XRAHX-*3 (1)	125	Opp	179			328554-2X	Furnished
ONE SPEED - TWO GEAR - MECHANICAL SHIFT															
221ZCDAX-*5	250	Opp	81			328564X	Furnished	221XCAHX-*3	250	Eng	80		7-A-032(P)(2)	328554-2X	Furnished
221ZEDAX-*5	250	Opp	90			328564X	Furnished	221XEAHX-*3	250	Eng	92			328554-2X	Furnished
221ZLDAX-*5	200	Opp	121			328564X	Furnished	221XLAHX-*3	200	Eng	124			328554-2X	Furnished
221ZPDAX-*5	200	Opp	146			328564X	Furnished	221XPAHX-*3	200	Eng	149			328554-2X	Furnished
442ZADAX-*5 (6)	250	Opp	71		7-A-062(P)	328481X	Furnished	221XCDAX-*3	250	Opp	81				Furnished
442ZCDAX-*5 (7)	250	Opp	90		7-A-062(P)	328481X	Furnished	221XEDAX-*3	250	Opp	90				Furnished
442ZFDAX-*5 (8)	250	Opp	112		7-A-062(P)	328481X	Furnished	221XLDAX-*3	200	Opp	121				Furnished
442ZHDAX-*5 (4)	250	Opp	130		7-A-062(P)	328481X	Furnished	221XPDAX-*3	200	Opp	146				Furnished
442ZLDAX-*5 (9)	250	Opp	144		7-A-062(P)	328481X	Furnished	442XFAHX-*3 (3)	250	Eng	111			328554-2X	Furnished
442ZQDAX-*5 (9)	225	Opp	156		7-A-062(P)	328481X	Furnished	442XHAHX-*3 (4)	250	Eng	130			328554-2X	Furnished
442ZRDAX-*5 (9)	225	Opp	180		7-A-062(P)	328481X	Furnished	442XLAHX-*3 (5)	250	Eng	144			328554-2X	Furnished
442ZSDAX-*5 (9)	200	Opp	214		7-A-062(P)	328481X	Furnished	442XQAHX-*3 (5)	225	Eng	155			328554-2X	Furnished
442ZUDAX-*5 (9)	195	Opp	255		7-A-062(P)	328481X	Furnished	442XRAHX-*3 (5)	225	Eng	179			328554-2X	Furnished
442ZWDAX-*5 (9)	175	Opp	301		7-A-062(P)	328481X	Furnished	442XSAHX-*3 (5)	200	Eng	213			328554-2X	Furnished
442ZXDAX-*5 (9)	140	Opp	356		7-A-062(P)	328481X	Furnished	442XUAHX-*3 (5)	195	Eng	254			328554-2X	Furnished
489ZADAX-*5 (6)	250	Opp	71				Furnished	442XWAHX-*3 (5)	175	Eng	298			328554-2X	Furnished
489ZCDAX-*5 (7)	250	Opp	90				Furnished	442XXAHX-*3 (5)	140	Eng	353			328554-2X	Furnished
489ZFDAX-*5 (8)	250	Opp	112				Furnished	442ZADAX-*3 (6)	250	Opp	71		7-A-062		Furnished
489ZHDAX-*5 (4)	250	Opp	130				Furnished	442ZCDAX-*3 (7)	250	Opp	90		7-A-062		Furnished
489ZLDAX-*5 (9)	250	Opp	144				Furnished	442ZFDAX-*3 (8)	250	Opp	112		7-A-062		Furnished
489ZQDAX-*5 (9)	225	Opp	156				Furnished	442ZHDAX-*3 (4)	250	Opp	130		7-A-062		Furnished
489ZRDAX-*5 (9)	225	Opp	180				Furnished	442ZLDAX-*3 (9)	250	Opp	144		7-A-062		Furnished
489ZSDAX-*5 (9)	200	Opp	214				Furnished	442ZQDAX-*3 (9)	225	Opp	156		7-A-062		Furnished
489ZUDAX-*5 (9)	195	Opp	255				Furnished	442ZRDAX-*3 (9)	225	Opp	180		7-A-062		Furnished
489ZWDAX-*5 (9)	175	Opp	301				Furnished	442ZSDAX-*3 (9)	200	Opp	214		7-A-062		Furnished
489ZXDAX-*5 (9)	140	Opp	356				Furnished	442ZUDAX-*3 (9)	195	Opp	255		7-A-062		Furnished

Continued Next Page

CAUTION: Do not use geared adapters with 442 "A" and "C" ratios.

CAUTION: 660/680 Series: Applications above 1500 RPM, contact Chelsea Technical Service for approval.

NOTE: Using the 328554-2X adapter will permit P.T.O. installation on trucks with set back front axle.

NOTE: All the applications shown are for the front box.

NOTE: The 812 Series with a direct mount pump flange or a universal joint larger than the 1000 series will interfere with the reverse idler bulge.

NOTE: The AK & XK output flanges can not be used with the "A" & "C" ratios on the 489 Series P.T.O.s due to mounting stud interference. Use a RA or RB rotatable flange for the XK and the RA for the AK flange.

(1) Gear and Shaft Kit No. KXA-2-P-565
(2) Filler block furnished with P.T.O.
(3) Input Gear Part No. 5-P-1077
(4) Input Gear Part No. 5-P-1365
(5) Input Gear Part No. 5-P-1004
(6) Input Gear Part No. 5-P-1284
(7) Input Gear Part No. 5-P-1291
(8) Input Gear Part No. 5-P-1085
(9) Input Gear Part No. 5-P-1037

2050	T2070-A	T305	T308M
2060	T2070-B	T306	TX2060
T2050	T2070-F	T307	X2060
T2060	T2080	T307M	
T2070	T2080-B	T308	

LEFT SIDE ONLY

TRANSMISSION GEAR DATA:
L.H. 8-Bolt Opening Gear FORWARD of Centerline
54 Teeth - SPUR
PITCH LINE TO APERTURE FACE:
.8100" (20.5700MM)

RIGHT SIDE ONLY

TRANSMISSION GEAR DATA:
R.H. 6-Bolt Opening Gear FORWARD of Centerline
54 Teeth - SPUR
PITCH LINE TO APERTURE FACE:
1.0850" (27.5600MM)

Caution: Application Approval Required for P.T.O. Output Shaft Speeds Above 2500 R.P.M.

LEFT Side P.T.O. Model	Inter. Torq.	Dir. Rot.	Engine % Hi	Engine % Rev	Filler Block	Adapter Assy.	Stud Kit	RIGHT Side P.T.O. Model	Inter. Torq.	Dir. Rot.	Engine % Hi	Engine % Rev	Filler Block	Adapter Assy.	Stud Kit
ONE SPEED - TWO GEAR - MECHANICAL SHIFT															
680ZFDAX-*5 (10)	375	Opp	112				Furnished	442ZWDAX-*3 (9)	175	Opp	301		7-A-062		Furnished
680ZQDAX-*5 (11)	375	Opp	156				Furnished	442ZXDAX-*3 (9)	140	Opp	356		7-A-062		Furnished
680ZSDAX-*5 (12)	325	Opp	214				Furnished	660ZFDAX-*3 (10)	375	Opp	112		7-A-062		Furnished
823XBDAX-*5 (13)	500	Opp	73				Furnished	660ZQDAX-*3 (11)	375	Opp	156		7-A-062		Furnished
823XMDAX-*5 (14)	500	Opp	129				Furnished	660ZSDAX-*3 (12)	325	Opp	214		7-A-062		Furnished
823XRDAX-*5 (15)	400	Opp	178				Furnished								
880XBDAX-*5 (16)	500	Opp	73				Furnished								
880XGDAX-*5 (17)	500	Opp	94				Furnished								
880XMDAX-*5 (18)	500	Opp	129				Furnished								
880XRDAX-*5 (19)	400	Opp	178				Furnished								
880XTDAX-*5 (20)	350	Opp	230				Furnished								
ONE SPEED - TWO GEAR - POWERSHIFT (AIR)															
230XADAX-*5	250	Opp	57			328481X	Furnished	230XADAX-*3	250	Opp	57				Furnished
230XBDAX-*5	250	Opp	74			328481X	Furnished	230XBDAX-*3	250	Opp	74				Furnished
230XDDAX-*5	250	Opp	86			328481X	Furnished	230XDDAX-*3	250	Opp	86				Furnished
230XKDAX-*5 (21)	250	Opp	116			328481X	Furnished	230XKDAX-*3 (21)	250	Opp	116				Furnished
230XQDAX-*5	250	Opp	154			328481X	Furnished	230XQDAX-*3	250	Opp	154				Furnished
236ZDDAX-*5 (9)	250	Opp	117		7-A-062(P)	328481X	Furnished	236XDAHX-*3 (5)	250	Eng	117			328554-2X	Furnished
236ZKDAX-*5 (9)	250	Opp	150		7-A-062(P)	328481X	Furnished	236XKAHX-*3 (5)	250	Eng	149			328554-2X	Furnished
236ZQDAX-*5 (9)	250	Opp	202		7-A-062(P)	328481X	Furnished	236XQAHX-*3 (5)	250	Eng	200			328554-2X	Furnished
236ZUDAX-*5 (9)	225	Opp	231		7-A-062(P)	328481X	Furnished	236XUAHX-*3 (5)	225	Eng	230			328554-2X	Furnished
885XBDAX-*5 (16)	500	Opp	73				Furnished	236ZDDAX-*3 (9)	250	Opp	117		7-A-062		Furnished
885XGDAX-*5 (17)	500	Opp	94				Furnished	236ZKDAX-*3 (9)	250	Opp	150		7-A-062		Furnished
885XMDAX-*5 (18)	500	Opp	129				Furnished	236ZQDAX-*3 (9)	250	Opp	202		7-A-062		Furnished
								236ZUDAX-*3 (9)	225	Opp	231		7-A-062		Furnished
ONE SPEED - FORWARD & REVERSE															
340SFDAX-*5 (22)	200	Opp	102	107		328481X	Furnished	340SFDAX-*5 (22)	200	Opp	102	107			Furnished

Continued Next Page

CAUTION: Do not use geared adapters with 442 "A" and "C" ratios.

CAUTION: 660/680 Series: Applications above 1500 RPM, contact Chelsea Technical Service for approval.

NOTE: Using the 328554-2X adapter will permit P.T.O. installation on trucks with set back front axle.

NOTE: All the applications shown are for the front box.

NOTE: The 812 Series with a direct mount pump flange or a universal joint larger than the 1000 series will interfere with the reverse idler bulge.

NOTE: The AK & XK output flanges can not be used with the "A" & "C" ratios on the 489 Series P.T.O.s due to mounting stud interference. Use a RA or RB rotatable flange for the XK and the RA for the AK flange.

(5) Input Gear Part No. 5-P-1004
(9) Input Gear Part No. 5-P-1037
(10) Input Gear Part No. 5-P-1330
(11) Input Gear Part No. 5-P-1331
(12) Input Gear Part No. 5-P-1332
(13) Input Gear Part No. 5-P-636
(14) Input Gear Part No. 5-P-637
(15) Input Gear Part No. 5-P-808
(16) Input Gear Part No. 5-P-1120
(17) Input Gear Part No. 5-P-1174
(18) Input Gear Part No. 5-P-1121
(19) Input Gear Part No. 5-P-1122
(20) Input Gear Part No. 5-P-1123
(21) Input Gear Part No. 5-P-843
(22) Input Gear Part No. 5-P-634

January 2008

Parker Hannifin Corporation
Chelsea Products Division
Olive Branch, MS 38654 USA

2050	T2070-A	T305	T308M
2060	T2070-B	T306	TX2060
T2050	T2070-F	T307	X2060
T2060	T2080	T307M	
T2070	T2080-B	T308	

LEFT SIDE ONLY

TRANSMISSION GEAR DATA:
L.H. 8-Bolt Opening Gear FORWARD of Centerline
54 Teeth - SPUR

PITCH LINE TO APERTURE FACE:
.8100" (20.5700MM)

RIGHT SIDE ONLY

TRANSMISSION GEAR DATA:
R.H. 6-Bolt Opening Gear FORWARD of Centerline
54 Teeth - SPUR

PITCH LINE TO APERTURE FACE:
1.0850" (27.5600MM)

Caution: Application Approval Required for P.T.O. Output Shaft Speeds Above 2500 R.P.M.

LEFT Side P.T.O. Model	Inter. Torq.	Dir. Rot.	Engine % Hi	Engine % Rev	Filler Block	Adapter Assy.	Stud Kit	RIGHT Side P.T.O. Model	Inter. Torq.	Dir. Rot.	Engine % Hi	Engine % Rev	Filler Block	Adapter Assy.	Stud Kit
ONE SPEED - FORWARD & REVERSE															
863XBDAX-*5	500	Opp	73	90			Furnished	352XSAHX-*3 (5)	140	Eng	216	279		328554-2X	Furnished
ONE SPEED - DUAL SHAFT															
								452XSAHX-*3 (5)	140	Eng	216			328554-2X	Furnished
GEARED ADAPTERS															
628ZDAX-5DA		Eng					Furnished	626ZDAX-3DA		Eng			7-A-062		Furnished
								630ZDAX-3DA		Eng			7-A-062		Furnished
								645ZDAX-3DA		Eng			7-A-062		Furnished

CAUTION: Do not use geared adapters with 442 "A" and "C" ratios.

CAUTION: 660/680 Series: Applications above 1500 RPM, contact Chelsea Technical Service for approval.

NOTE: Using the 328554-2X adapter will permit P.T.O. installation on trucks with set back front axle.

NOTE: All the applications shown are for the front box.

NOTE: The 812 Series with a direct mount pump flange or a universal joint larger than the 1000 series will interfere with the reverse idler bulge.

NOTE: The AK & XK output flanges can not be used with the "A" & "C" ratios on the 489 Series P.T.O.s due to mounting stud interference. Use a RA or RB rotatable flange for the XK and the RA for the AK flange.

(5) Input Gear Part No. 5-P-1004

T2070-A	T307M
T2070-B	T308M
T2070-D	TM308M
T2080-B	
T2080-D	

LEFT SIDE ONLY

TRANSMISSION GEAR DATA:
L.H. 8-Bolt Opening Gear FORWARD of Centerline
49 Teeth - SPUR

PITCH LINE TO APERTURE FACE:
.6670" (16.9400MM)

RIGHT SIDE ONLY

TRANSMISSION GEAR DATA:
R.H. 6-Bolt Opening Gear FORWARD of Centerline
49 Teeth - SPUR

PITCH LINE TO APERTURE FACE:
1.0550" (26.8000MM)

Caution: Application Approval Required for P.T.O. Output Shaft Speeds Above 2500 R.P.M.

LEFT Side P.T.O. Model	Inter. Torq.	Dir. Rot.	Engine % Hi	Engine % Rev	Filler Block	Adapter Assy.	Stud Kit	RIGHT Side P.T.O. Model	Inter. Torq.	Dir. Rot.	Engine % Hi	Engine % Rev	Filler Block	Adapter Assy.	Stud Kit
ONE SPEED - SINGLE GEAR - MECHANICAL SHIFT															
812XKDAX-*5	400	Eng	129				Furnished								
ONE SPEED - TWO GEAR - MECHANICAL SHIFT															
221ZCDAX-*5	250	Opp	90		7-A-062(P)	328564X	Furnished	221XCDAX-*3	250	Opp	90		7-A-032		Furnished
221ZEDAX-*5	250	Opp	100		7-A-062(P)	328564X	Furnished	221XEDAX-*3	250	Opp	100		7-A-032		Furnished
221ZLDAX-*5	200	Opp	134		7-A-062(P)	328564X	Furnished	221XLDAX-*3	200	Opp	134		7-A-032		Furnished
221ZPDAX-*5	200	Opp	162		7-A-062(P)	328564X	Furnished	221XPDAX-*3	200	Opp	162		7-A-032		Furnished
442ZADAX-*5 (1)	250	Opp	78		7-A-032(P)	310778X	Furnished	442ZADAX-*3 (1)	250	Opp	78		7-A-140		Furnished
442ZCDAX-*5 (2)	250	Opp	100		7-A-032(P)	310778X	Furnished	442ZCDAX-*3 (2)	250	Opp	100		7-A-140		Furnished
442ZFDAX-*5 (3)	250	Opp	124		7-A-032(P)	310778X	Furnished	442ZFDAX-*3 (3)	250	Opp	124		7-A-140		Furnished
442ZHDAX-*5 (4)	250	Opp	144		7-A-032(P)	310778X	Furnished	442ZHDAX-*3 (4)	250	Opp	144		7-A-140		Furnished
442ZLDAX-*5 (5)	250	Opp	161		7-A-032(P)	310778X	Furnished	442ZLDAX-*3 (5)	250	Opp	161		7-A-140		Furnished
442ZQDAX-*5 (5)	225	Opp	173		7-A-032(P)	310778X	Furnished	442ZQDAX-*3 (5)	225	Opp	173		7-A-140		Furnished
442ZRDAX-*5 (5)	225	Opp	200		7-A-032(P)	310778X	Furnished	442ZRDAX-*3 (5)	225	Opp	200		7-A-140		Furnished
442ZSDAX-*5 (5)	200	Opp	238		7-A-032(P)	310778X	Furnished	442ZSDAX-*3 (5)	200	Opp	238		7-A-140		Furnished
442ZUDAX-*5 (5)	195	Opp	284		7-A-032(P)	310778X	Furnished	442ZUDAX-*3 (5)	195	Opp	284		7-A-140		Furnished
442ZWDAX-*5 (5)	175	Opp	334		7-A-032(P)	310778X	Furnished	442ZWDAX-*3 (5)	175	Opp	334		7-A-140		Furnished
442ZXDAX-*5 (5)	140	Opp	395		7-A-032(P)	310778X	Furnished	442ZXDAX-*3 (5)	140	Opp	395		7-A-140		Furnished
489ZADAX-*5 (1)	250	Opp	78		8-A-062		328170-190X	660ZFDAX-*3 (6)	375	Opp	124		7-A-140		Furnished
489ZCDAX-*5 (2)	250	Opp	100		8-A-062		328170-190X	660ZQDAX-*3 (7)	375	Opp	173		7-A-140		Furnished
489ZFDAX-*5 (3)	250	Opp	124		8-A-062		328170-190X	660ZSDAX-*3 (8)	325	Opp	238		7-A-140		Furnished
489ZHDAX-*5 (4)	250	Opp	144		8-A-062		328170-190X								
489ZLDAX-*5 (5)	250	Opp	161		8-A-062		328170-190X								
489ZQDAX-*5 (5)	225	Opp	173		8-A-062		328170-190X								
489ZRDAX-*5 (5)	225	Opp	200		8-A-062		328170-190X								
489ZSDAX-*5 (5)	200	Opp	238		8-A-062		328170-190X								
489ZUDAX-*5 (5)	195	Opp	284		8-A-062		328170-190X								
489ZWDAX-*5 (5)	175	Opp	334		8-A-062		328170-190X								
489ZXDAX-*5 (5)	140	Opp	395		8-A-062		328170-190X								

Continued Next Page

CAUTION: Do not use geared adapters with 442 "A" and "C" ratios.

CAUTION: 660/680 Series: Applications above 1500 RPM, contact Chelsea Technical Service for approval.

NOTE: On the R.H. side the 328554-2X adapter can be used with an "AH" P.T.O. to change rotation.

NOTE: All speeds shown are with the main transmission in 5th speed. For P.T.O. speeds with the main transmission in all other gears, divide the speeds shown by the following percentages: 1st. = 8.76, 2nd. = 5.995, 3rd. = 2.895, 4th. = 1.674, Reverse = 8.99

NOTE: The 812 Series with a direct mount pump flange or a universal joint larger than the 1000 series will interfere with the reverse idler bulge.

NOTE: The AK & XK output flanges can not be used with the "A" & "C" ratios on the 489 Series P.T.O.s due to mounting stud interference. Use a RA or RB rotatable flange for the XK and the RA for the AK flange.

(1) Input Gear Part No. 5-P-1284
(2) Input Gear Part No. 5-P-1291
(3) Input Gear Part No. 5-P-1085
(4) Input Gear Part No. 5-P-1365
(5) Input Gear Part No. 5-P-1037
(6) Input Gear Part No. 5-P-1330
(7) Input Gear Part No. 5-P-1331
(8) Input Gear Part No. 5-P-1332

Parker Hannifin Corporation
Chelsea Products Division
Olive Branch, MS 38654 USA

T2070-A	T307M
T2070-B	T308M
T2070-D	TM308M
T2080-B	
T2080-D	

LEFT SIDE ONLY

TRANSMISSION GEAR DATA:
L.H. 8-Bolt Opening Gear FORWARD of Centerline
49 Teeth - SPUR

PITCH LINE TO APERTURE FACE:
.6670" (16.9400MM)

RIGHT SIDE ONLY

TRANSMISSION GEAR DATA:
R.H. 6-Bolt Opening Gear FORWARD of Centerline
49 Teeth - SPUR

PITCH LINE TO APERTURE FACE:
1.0550" (26.8000MM)

Caution: Application Approval Required for P.T.O. Output Shaft Speeds Above 2500 R.P.M.

LEFT Side P.T.O. Model	Inter. Torq.	Dir. Rot.	Engine % Hi	Engine % Rev	Filler Block	Adapter Assy.	Stud Kit	RIGHT Side P.T.O. Model	Inter. Torq.	Dir. Rot.	Engine % Hi	Engine % Rev	Filler Block	Adapter Assy.	Stud Kit
ONE SPEED - TWO GEAR - MECHANICAL SHIFT															
680ZFDAX-*5 (6)	375	Opp	124		8-A-062		328170-190X								
680ZQDAX-*5 (7)	375	Opp	173		8-A-062		328170-190X								
680ZSDAX-*5 (8)	325	Opp	238		8-A-062		328170-190X								
823XBDAX-*5 (9)	500	Opp	81				Furnished								
823XMDAX-*5 (10)	500	Opp	143				Furnished								
823XRDAX-*5 (11)	400	Opp	198				Furnished								
880XBDAX-*5 (12)	500	Opp	81				Furnished								
880XGDAX-*5 (13)	500	Opp	104				Furnished								
880XMDAX-*5 (14)	500	Opp	143				Furnished								
880XRDAX-*5 (15)	400	Opp	198				Furnished								
880XTDAX-*5 (16)	350	Opp	255				Furnished								
ONE SPEED - TWO GEAR - POWERSHIFT (AIR)															
230XADAX-*5	250	Opp	63		7-A-062(P)	328481X	Furnished	230XADAX-*3	250	Opp	63		7-A-032		Furnished
230XBDAX-*5	250	Opp	82		7-A-062(P)	328481X	Furnished	230XBDAX-*3	250	Opp	82		7-A-032		Furnished
230XDDAX-*5	250	Opp	95		7-A-062(P)	328481X	Furnished	230XDDAX-*3	250	Opp	95		7-A-032		Furnished
230XKDAX-*5 (17)	250	Opp	128		7-A-062(P)	328481X	Furnished	230XKDAX-*3 (17)	250	Opp	128		7-A-032		Furnished
230XQDAX-*5 (18)	250	Opp	171		7-A-062(P)	328481X	Furnished	230XQDAX-*3 (18)	250	Opp	171		7-A-032		Furnished
236ZDDAX-*5 (5)	250	Opp	130		7-A-032(P)	310778X	Furnished	236ZDDAX-*3 (5)	250	Opp	130		7-A-140		Furnished
236ZKDAX-*5 (5)	250	Opp	166		7-A-032(P)	310778X	Furnished	236ZKDAX-*3 (5)	250	Opp	166		7-A-140		Furnished
236ZQDAX-*5 (5)	250	Opp	224		7-A-032(P)	310778X	Furnished	236ZQDAX-*3 (5)	250	Opp	224		7-A-140		Furnished
236ZUDAX-*5 (5)	225	Opp	257		7-A-032(P)	310778X	Furnished	236ZUDAX-*3 (5)	225	Opp	257		7-A-140		Furnished
885XBDAX-*5 (12)	500	Opp	81				Furnished								
885XGDAX-*5 (13)	500	Opp	104				Furnished								
885XMDAX-*5 (14)	500	Opp	143				Furnished								
ONE SPEED - FORWARD & REVERSE															
340SFDAX-*5 (19)	200	Opp	113	119	7-A-062(P)	328481X	Furnished	340SFDAX-*5 (19)	200	Opp	113	119	7-A-062		Furnished
863XBDAX-*5	500	Opp	81	100			Furnished	352XSAHX-*3 (20)	140	Eng	240	310		328554-2X	Furnished

Continued Next Page

CAUTION: Do not use geared adapters with 442 "A" and "C" ratios.

CAUTION: 660/680 Series: Applications above 1500 RPM, contact Chelsea Technical Service for approval.

NOTE: On the R.H. side the 328554-2X adapter can be used with an "AH" P.T.O. to change rotation.

NOTE: All speeds shown are with the main transmission in 5th speed. For P.T.O. speeds with the main transmission in all other gears, divide the speeds shown by the following percentages: 1st. = 8.76, 2nd. = 5.995, 3rd. = 2.895, 4th. = 1.674, Reverse = 8.99

NOTE: The 812 Series with a direct mount pump flange or a universal joint larger than the 1000 series will interfere with the reverse idler bulge.

NOTE: The AK & XK output flanges can not be used with the "A" & "C" ratios on the 489 Series P.T.O.s due to mounting stud interference. Use a RA or RB rotatable flange for the XK and the RA for the AK flange.

(5) Input Gear Part No. 5-P-1037
(6) Input Gear Part No. 5-P-1330
(7) Input Gear Part No. 5-P-1331
(8) Input Gear Part No. 5-P-1332
(9) Input Gear Part No. 5-P-636
(10) Input Gear Part No. 5-P-637
(11) Input Gear Part No. 5-P-808
(12) Input Gear Part No. 5-P-1120
(13) Input Gear Part No. 5-P-1174
(14) Input Gear Part No. 5-P-1121
(15) Input Gear Part No. 5-P-1122
(16) Input Gear Part No. 5-P-1123
(17) Input Gear Part No. 5-P-843
(18) Input Gear Part No. 5-P-844
(19) Input Gear Part No. 5-P-634
(20) Input Gear Part No. 5-P-1004

January 2008

Parker Hannifin Corporation
Chelsea Products Division
Olive Branch, MS 38654 USA

T2070-A	T307M
T2070-B	T308M
T2070-D	TM308M
T2080-B	
T2080-D	

LEFT SIDE ONLY

TRANSMISSION GEAR DATA:
L.H. 8-Bolt Opening Gear FORWARD of Centerline
49 Teeth - SPUR

PITCH LINE TO APERTURE FACE:
.6670" (16.9400MM)

RIGHT SIDE ONLY

TRANSMISSION GEAR DATA:
R.H. 6-Bolt Opening Gear FORWARD of Centerline
49 Teeth - SPUR

PITCH LINE TO APERTURE FACE:
1.0550" (26.8000MM)

Caution: Application Approval Required for P.T.O. Output Shaft Speeds Above 2500 R.P.M.

LEFT Side P.T.O. Model	Inter. Torq.	Dir. Rot.	Engine % Hi	Engine % Rev	Filler Block	Adapter Assy.	Stud Kit	RIGHT Side P.T.O. Model	Inter. Torq.	Dir. Rot.	Engine % Hi	Engine % Rev	Filler Block	Adapter Assy.	Stud Kit
ONE SPEED - DUAL SHAFT															
								452XSAHX-*3 (20)	140	Eng	240			328554-2X	Furnished
GEARED ADAPTERS															
628ZDAX-5DA		Eng					Furnished	626ZDAX-3DA		Eng			7-A-062		Furnished
630ZDAX-3DA		Eng			7-A-062		Furnished	630ZDAX-3DA		Eng			7-A-062		Furnished
645ZDAX-3DA		Eng			7-A-062		Furnished								

CAUTION: Do not use geared adapters with 442 "A" and "C" ratios.

CAUTION: 660/680 Series: Applications above 1500 RPM, contact Chelsea Technical Service for approval.

NOTE: On the R.H. side the 328554-2X adapter can be used with an "AH" P.T.O. to change rotation.

NOTE: All speeds shown are with the main transmission in 5th speed. For P.T.O. speeds with the main transmission in all other gears, divide the speeds shown by the following percentages: 1st. = 8.76, 2nd. = 5.995, 3rd. = 2.895, 4th. = 1.674, Reverse = 8.99

NOTE: The 812 Series with a direct mount pump flange or a universal joint larger than the 1000 series will interfere with the reverse idler bulge.

NOTE: The AK & XK output flanges can not be used with the "A" & "C" ratios on the 489 Series P.T.O.s due to mounting stud interference. Use a RA or RB rotatable flange for the XK and the RA for the AK flange.

(20) Input Gear Part No. 5-P-1004

Parker Hannifin Corporation
Chelsea Products Division
Olive Branch, MS 38654 USA

T2180	T318L
T2180-B	T318L21
T310-M	T318LR
T310-MLR	T318LR21
T310ME	

LEFT SIDE ONLY

TRANSMISSION GEAR DATA:
L.H. 8-Bolt Opening Gear FORWARD of Centerline
49 Teeth - SPUR

PITCH LINE TO APERTURE FACE:
.6670" (16.9400MM)

RIGHT SIDE ONLY

TRANSMISSION GEAR DATA:
R.H. 6-Bolt Opening Gear FORWARD of Centerline
49 Teeth - SPUR

PITCH LINE TO APERTURE FACE:
1.0550" (26.8000MM)

Caution: Application Approval Required for P.T.O. Output Shaft Speeds Above 2500 R.P.M.

LEFT Side P.T.O. Model	Inter. Torq.	Dir. Rot.	Engine % Hi	Engine % Rev	Filler Block	Adapter Assy.	Stud Kit	RIGHT Side P.T.O. Model	Inter. Torq.	Dir. Rot.	Engine % Hi	Engine % Rev	Filler Block	Adapter Assy.	Stud Kit
ONE SPEED - SINGLE GEAR - MECHANICAL SHIFT															
812XKDAX-*5	400	Eng	77				Furnished								
ONE SPEED - TWO GEAR - MECHANICAL SHIFT															
221ZCDAX-*5	250	Opp	54		7-A-062(P)	328564X	Furnished	221XCDAX-*3	250	Opp	54		7-A-032		Furnished
221ZEDAX-*5	250	Opp	59		7-A-062(P)	328564X	Furnished	221XEDAX-*3	250	Opp	59		7-A-032		Furnished
221ZLDAX-*5	200	Opp	80		7-A-062(P)	328564X	Furnished	221XLDAX-*3	200	Opp	80		7-A-032		Furnished
221ZPDAX-*5	200	Opp	97		7-A-062(P)	328564X	Furnished	221XPDAX-*3	200	Opp	97		7-A-032		Furnished
442ZADAX-*5 (1)	250	Opp	47		7-A-032(P)	310778X	Furnished	442ZADAX-*3 (1)	250	Opp	47		7-A-140		Furnished
442ZCDAX-*5 (2)	250	Opp	60		7-A-032(P)	310778X	Furnished	442ZCDAX-*3 (2)	250	Opp	60		7-A-140		Furnished
442ZFDAX-*5 (3)	250	Opp	74		7-A-032(P)	310778X	Furnished	442ZFDAX-*3 (3)	250	Opp	74		7-A-140		Furnished
442ZHDAX-*5 (4)	250	Opp	86		7-A-032(P)	310778X	Furnished	442ZHDAX-*3 (4)	250	Opp	86		7-A-140		Furnished
442ZLDAX-*5 (5)	250	Opp	96		7-A-032(P)	310778X	Furnished	442ZLDAX-*3 (5)	250	Opp	96		7-A-140		Furnished
442ZQDAX-*5 (5)	225	Opp	103		7-A-032(P)	310778X	Furnished	442ZQDAX-*3 (5)	225	Opp	103		7-A-140		Furnished
442ZRDAX-*5 (5)	225	Opp	120		7-A-032(P)	310778X	Furnished	442ZRDAX-*3 (5)	225	Opp	120		7-A-140		Furnished
442ZSDAX-*5 (5)	200	Opp	142		7-A-032(P)	310778X	Furnished	442ZSDAX-*3 (5)	200	Opp	142		7-A-140		Furnished
442ZUDAX-*5 (5)	195	Opp	169		7-A-032(P)	310778X	Furnished	442ZUDAX-*3 (5)	195	Opp	169		7-A-140		Furnished
442ZWDAX-*5 (5)	175	Opp	199		7-A-032(P)	310778X	Furnished	442ZWDAX-*3 (5)	175	Opp	199		7-A-140		Furnished
442ZXDAX-*5 (5)	140	Opp	236		7-A-032(P)	310778X	Furnished	442ZXDAX-*3 (5)	140	Opp	236		7-A-140		Furnished
489ZADAX-*5 (1)	250	Opp	47		8-A-062		328170-190X	660ZFDAX-*3 (6)	375	Opp	74		7-A-140		Furnished
489ZCDAX-*5 (2)	250	Opp	60		8-A-062		328170-190X	660ZQDAX-*3 (7)	375	Opp	103		7-A-140		Furnished
489ZFDAX-*5 (3)	250	Opp	74		8-A-062		328170-190X	660ZSDAX-*3 (8)	325	Opp	142		7-A-140		Furnished
489ZHDAX-*5 (4)	250	Opp	86		8-A-062		328170-190X								
489ZLDAX-*5 (5)	250	Opp	96		8-A-062		328170-190X								
489ZQDAX-*5 (5)	225	Opp	103		8-A-062		328170-190X								
489ZRDAX-*5 (5)	225	Opp	120		8-A-062		328170-190X								
489ZSDAX-*5 (5)	200	Opp	142		8-A-062		328170-190X								
489ZUDAX-*5 (5)	195	Opp	169		8-A-062		328170-190X								
489ZWDAX-*5 (5)	175	Opp	199		8-A-062		328170-190X								
489ZXDAX-*5 (5)	140	Opp	236		8-A-062		328170-190X								

Continued Next Page

CAUTION: Do not use geared adapters with 442 "A" and "C" ratios.

CAUTION: 660/680 Series: Applications above 1500 RPM, contact Chelsea Technical Service for approval.

CAUTION: Mack Does Not approve P.T.O. operations with the Range Selector in the "HI" position. Damage to the transmission synchroizers may occure.

NOTE: This application is for the rear box only. For front box applications, see application no. MAK-23.

NOTE: All speeds shown are with the transmission in 7th speed, or direct, and rear box in neutral. For speeds with main box in all the gear positions available, see the P.T.O. speed chart on this page.

NOTE: With main box in reverse, the direction of rotation on the P.T.O. output shaft will change.

NOTE: The AK & XK output flanges can not be used with the "A" & "C" ratios on the 489 Series P.T.O.s due to mounting stud interference. Use a RA or RB rotatable flange for the XK and the RA for the AK flange.

(1) Input Gear Part No. 5-P-1284
(2) Input Gear Part No. 5-P-1291
(3) Input Gear Part No. 5-P-1085
(4) Input Gear Part No. 5-P-1365
(5) Input Gear Part No. 5-P-1037
(6) Input Gear Part No. 5-P-1330
(7) Input Gear Part No. 5-P-1331
(8) Input Gear Part No. 5-P-1332

January 2008

Parker Hannifin Corporation
Chelsea Products Division
Olive Branch, MS 38654 USA

T2180	T318L
T2180-B	T318L21
T310-M	T318LR
T310-MLR	T318LR21
T310ME	

LEFT SIDE ONLY

TRANSMISSION GEAR DATA:
L.H. 8-Bolt Opening Gear FORWARD of Centerline
49 Teeth - SPUR

PITCH LINE TO APERTURE FACE:
.6670" (16.9400MM)

RIGHT SIDE ONLY

TRANSMISSION GEAR DATA:
R.H. 6-Bolt Opening Gear FORWARD of Centerline
49 Teeth - SPUR

PITCH LINE TO APERTURE FACE:
1.0550" (26.8000MM)

Caution: Application Approval Required for P.T.O. Output Shaft Speeds Above 2500 R.P.M.

LEFT Side P.T.O. Model	Inter. Torq.	Dir. Rot.	Engine % Hi	Engine % Rev	Filler Block	Adapter Assy.	Stud Kit	RIGHT Side P.T.O. Model	Inter. Torq.	Dir. Rot.	Engine % Hi	Engine % Rev	Filler Block	Adapter Assy.	Stud Kit
ONE SPEED - TWO GEAR - MECHANICAL SHIFT															
680ZFDAX-*5 (6)	375	Opp	74		8-A-062		328170-190X								
680ZQDAX-*5 (7)	375	Opp	103		8-A-062		328170-190X								
680ZSDAX-*5 (8)	325	Opp	142		8-A-062		328170-190X								
823XBDAX-*5	500	Opp	48				Furnished								
823XMDAX-*5 (9)	500	Opp	86				Furnished								
823XRDAX-*5 (10)	400	Opp	118				Furnished								
880XBDAX-*5 (11)	500	Opp	48				Furnished								
880XGDAX-*5 (12)	500	Opp	62				Furnished								
880XMDAX-*5 (13)	500	Opp	86				Furnished								
880XRDAX-*5 (14)	400	Opp	118				Furnished								
880XTDAX-*5 (15)	350	Opp	152				Furnished								
ONE SPEED - TWO GEAR - POWERSHIFT (AIR)															
230XADAX-*5	250	Opp	38		7-A-062(P)	328481X	Furnished	230XADAX-*3	250	Opp	38		7-A-032		Furnished
230XBDAX-*5	250	Opp	49		7-A-062(P)	328481X	Furnished	230XBDAX-*3	250	Opp	49		7-A-032		Furnished
230XDDAX-*5	250	Opp	57		7-A-062(P)	328481X	Furnished	230XDDAX-*3	250	Opp	57		7-A-032		Furnished
230XKDAX-*5 (16)	250	Opp	77		7-A-062(P)	328481X	Furnished	230XKDAX-*3 (16)	250	Opp	77		7-A-032		Furnished
230XQDAX-*5 (17)	250	Opp	102		7-A-062(P)	328481X	Furnished	230XQDAX-*3 (17)	250	Opp	102		7-A-032		Furnished
236ZDDAX-*5 (5)	250	Opp	78		7-A-032(P)	310778X	Furnished	236ZDDAX-*3 (5)	250	Opp	78		7-A-140		Furnished
236ZKDAX-*5 (5)	250	Opp	100		7-A-032(P)	310778X	Furnished	236ZKDAX-*3 (5)	250	Opp	100		7-A-140		Furnished
236ZQDAX-*5 (5)	250	Opp	134		7-A-032(P)	310778X	Furnished	236ZQDAX-*3 (5)	250	Opp	134		7-A-140		Furnished
236ZUDAX-*5 (5)	225	Opp	153		7-A-032(P)	310778X	Furnished	236ZUDAX-*3 (5)	225	Opp	153		7-A-140		Furnished
885XBDAX-*5 (11)	500	Opp	48				Furnished								
885XGDAX-*5 (12)	500	Opp	62				Furnished								
885XMDAX-*5 (13)	500	Opp	86				Furnished								
ONE SPEED - FORWARD & REVERSE															
340SFDAX-*5 (18)	200	Opp	68	71	7-A-062(P)	328481X	Furnished	340SFDAX-*5 (18)	200	Opp	68	71	7-A-062		Furnished
863XBDAX-*5	500	Opp	48	60			Furnished								

Continued Next Page

CAUTION: Do not use geared adapters with 442 "A" and "C" ratios.

CAUTION: 660/680 Series: Applications above 1500 RPM, contact Chelsea Technical Service for approval.

CAUTION: Mack Does Not approve P.T.O. operations with the Range Selector in the "HI" position. Damage to the transmission synchroizers may occure.

NOTE: This application is for the rear box only. For front box applications, see application no. MAK-23.

NOTE: All speeds shown are with the transmission in 7th speed, or direct, and rear box in neutral. For speeds with main box in all the gear positions available, see the P.T.O. speed chart on this page.

NOTE: With main box in reverse, the direction of rotation on the P.T.O. output shaft will change.

NOTE: The AK & XK output flanges can not be used with the "A" & "C" ratios on the 489 Series P.T.O.s due to mounting stud interference. Use a RA or RB rotatable flange for the XK and the RA for the AK flange.

(5) Input Gear Part No. 5-P-1037
(6) Input Gear Part No. 5-P-1330
(7) Input Gear Part No. 5-P-1331
(8) Input Gear Part No. 5-P-1332
(9) Input Gear Part No. 5-P-637
(10) Input Gear Part No. 5-P-808
(11) Input Gear Part No. 5-P-1120
(12) Input Gear Part No. 5-P-1174
(13) Input Gear Part No. 5-P-1121
(14) Input Gear Part No. 5-P-1122
(15) Input Gear Part No. 5-P-1123
(16) Input Gear Part No. 5-P-843
(17) Input Gear Part No. 5-P-844
(18) Input Gear Part No. 5-P-634

January 2008

Parker Hannifin Corporation
Chelsea Products Division
Olive Branch, MS 38654 USA

T2180	T318L
T2180-B	T318L21
T310-M	T318LR
T310-MLR	T318LR21
T310ME	

LEFT SIDE ONLY

TRANSMISSION GEAR DATA:
L.H. 8-Bolt Opening Gear FORWARD of Centerline
49 Teeth - SPUR

PITCH LINE TO APERTURE FACE:
.6670" (16.9400MM)

RIGHT SIDE ONLY

TRANSMISSION GEAR DATA:
R.H. 6-Bolt Opening Gear FORWARD of Centerline
49 Teeth - SPUR

PITCH LINE TO APERTURE FACE:
1.0550" (26.8000MM)

Caution: Application Approval Required for P.T.O. Output Shaft Speeds Above 2500 R.P.M.

GEARED ADAPTERS

LEFT Side P.T.O. Model	Inter. Torq.	Dir. Rot.	Engine % Hi	Engine % Rev	Filler Block	Adapter Assy.	Stud Kit	RIGHT Side P.T.O. Model	Inter. Torq.	Dir. Rot.	Engine % Hi	Engine % Rev	Filler Block	Adapter Assy.	Stud Kit
628ZDAX-5DA		Eng			8-A-062	328170-190X		626ZDAX-3DA		Eng			7-A-140		Furnished
								630ZDAX-3DA		Eng			7-A-140		Furnished
								645ZDAX-3DA		Eng			7-A-140		Furnished

Available P.T.O. Output Shaft Speeds With Rear Box in Neutral

Transmission Shifter & Selection Location			Multiplication Factor	Transmission Shifter & Selection Location			Multiplication Factor
LO	LO	LO	0.2755	5	HI	HI	0.5146
LO	HI	LO	0.3250	6	LO	HI	0.6097
1	LO	LO	0.4363	6	HI	HI	0.7197
1	HI	LO	0.5146	7	LO	HI	0.8482
2	LO	LO	0.6097	7	HI	HI	1.0000
2	HI	LO	0.7197	8	LO	HI	1.1910
3	LO	LO	0.8482	8	HI	HI	1.4040
3	HI	LO	1.0000	REV	HI	HI	0.1547
4	LO	LO	1.1910	REV	LO	HI	0.1305
4	HI	LO	1.4040	REV	LO	LO	0.1547
5	LO	HI	0.4363	REV	HI	LO	0.1305

EXAMPLE: Main Box in 4 HI LO with 442ZQDAX on Rear Box with output speed of 103% x 1.404 = 144.6%
CAUTION: P.T.O. operations not permitted by Mack in "HI" selector range (shaded area).

CAUTION: Do not use geared adapters with 442 "A" and "C" ratios.

CAUTION: 660/680 Series: Applications above 1500 RPM, contact Chelsea Technical Service for approval.

CAUTION: Mack Does Not approve P.T.O. operations with the Range Selector in the "HI" position. Damage to the transmission synchroizers may occure.

NOTE: This application is for the rear box only. For front box applications, see application no. MAK-23.

NOTE: All speeds shown are with the transmission in 7th speed, or direct, and rear box in neutral. For speeds with main box in all the gear positions available, see the P.T.O. speed chart on this page.

NOTE: With main box in reverse, the direction of rotation on the P.T.O. output shaft will change.

NOTE: The AK & XK output flanges can not be used with the "A" & "C" ratios on the 489 Series P.T.O.s due to mounting stud interference. Use a RA or RB rotatable flange for the XK and the RA for the AK flange.

T2130	T313LR21
T2130-B	
T313L	
T313L21	
T313LR	

LEFT SIDE ONLY

TRANSMISSION GEAR DATA:
L.H. 8-Bolt Opening Gear FORWARD of Centerline
49 Teeth - SPUR

PITCH LINE TO APERTURE FACE:
.6670" (16.9400MM)

RIGHT SIDE ONLY

TRANSMISSION GEAR DATA:
R.H. 6-Bolt Opening Gear FORWARD of Centerline
49 Teeth - SPUR

PITCH LINE TO APERTURE FACE:
1.0550" (26.8000MM)

Caution: Application Approval Required for P.T.O. Output Shaft Speeds Above 2500 R.P.M.

LEFT Side P.T.O. Model	Inter. Torq.	Dir. Rot.	Engine % Hi	Engine % Rev	Filler Block	Adapter Assy.	Stud Kit	RIGHT Side P.T.O. Model	Inter. Torq.	Dir. Rot.	Engine % Hi	Engine % Rev	Filler Block	Adapter Assy.	Stud Kit
ONE SPEED - SINGLE GEAR - MECHANICAL SHIFT															
812XKDAX-*5	400	Eng	65				Furnished								
ONE SPEED - TWO GEAR - MECHANICAL SHIFT															
221ZCDAX-*5	250	Opp	45		7-A-062(P)	328564X	Furnished	221XCDAX-*3	250	Opp	45		7-A-032		Furnished
221ZEDAX-*5	250	Opp	50		7-A-062(P)	328564X	Furnished	221XEDAX-*3	250	Opp	50		7-A-032		Furnished
221ZLDAX-*5	200	Opp	68		7-A-062(P)	328564X	Furnished	221XLDAX-*3	200	Opp	68		7-A-032		Furnished
221ZPDAX-*5	200	Opp	82		7-A-062(P)	328564X	Furnished	221XPDAX-*3	200	Opp	82		7-A-032		Furnished
442ZADAX-*5 (1)	250	Opp	40		7-A-032(P)	310778X	Furnished	442ZADAX-*3 (1)	250	Opp	40		7-A-140		Furnished
442ZCDAX-*5 (2)	250	Opp	51		7-A-032(P)	310778X	Furnished	442ZCDAX-*3 (2)	250	Opp	51		7-A-140		Furnished
442ZFDAX-*5 (3)	250	Opp	63		7-A-032(P)	310778X	Furnished	442ZFDAX-*3 (3)	250	Opp	63		7-A-140		Furnished
442ZHDAX-*5 (4)	250	Opp	73		7-A-032(P)	310778X	Furnished	442ZHDAX-*3 (4)	250	Opp	73		7-A-140		Furnished
442ZLDAX-*5 (5)	250	Opp	81		7-A-032(P)	310778X	Furnished	442ZLDAX-*3 (5)	250	Opp	81		7-A-140		Furnished
442ZQDAX-*5 (5)	225	Opp	88		7-A-032(P)	310778X	Furnished	442ZQDAX-*3 (5)	225	Opp	88		7-A-140		Furnished
442ZRDAX-*5 (5)	225	Opp	101		7-A-032(P)	310778X	Furnished	442ZRDAX-*3 (5)	225	Opp	101		7-A-140		Furnished
442ZSDAX-*5 (5)	200	Opp	121		7-A-032(P)	310778X	Furnished	442ZSDAX-*3 (5)	200	Opp	121		7-A-140		Furnished
442ZUDAX-*5 (5)	195	Opp	144		7-A-032(P)	310778X	Furnished	442ZUDAX-*3 (5)	195	Opp	144		7-A-140		Furnished
442ZWDAX-*5 (5)	175	Opp	169		7-A-032(P)	310778X	Furnished	442ZWDAX-*3 (5)	175	Opp	169		7-A-140		Furnished
442ZXDAX-*5 (5)	140	Opp	200		7-A-032(P)	310778X	Furnished	442ZXDAX-*3 (5)	140	Opp	200		7-A-140		Furnished
489ZADAX-*5 (1)	250	Opp	40		8-A-062		328170-190X	660ZFDAX-*3 (6)	375	Opp	63		7-A-140		Furnished
489ZCDAX-*5 (2)	250	Opp	51		8-A-062		328170-190X	660ZQDAX-*3 (7)	375	Opp	88		7-A-140		Furnished
489ZFDAX-*5 (3)	250	Opp	63		8-A-062		328170-190X	660ZSDAX-*3 (8)	325	Opp	121		7-A-140		Furnished
489ZHDAX-*5 (4)	250	Opp	73		8-A-062		328170-190X								
489ZLDAX-*5 (5)	250	Opp	81		8-A-062		328170-190X								
489ZQDAX-*5 (5)	225	Opp	88		8-A-062		328170-190X								
489ZRDAX-*5 (5)	225	Opp	101		8-A-062		328170-190X								
489ZSDAX-*5 (5)	200	Opp	121		8-A-062		328170-190X								
489ZUDAX-*5 (5)	195	Opp	144		8-A-062		328170-190X								
489ZWDAX-*5 (5)	175	Opp	169		8-A-062		328170-190X								
489ZXDAX-*5 (5)	140	Opp	200		8-A-062		328170-190X								

Continued Next Page

CAUTION: Do not use geared adapters with 442 "A" and "C" ratios.

CAUTION: 660/680 Series: Applications above 1500 RPM, contact Chelsea Technical Service for approval.

NOTE: All speeds shown are with the main transmission in 4th.,10th.,or 11th speed, and rear box in neutral. For speeds with main transmission in other gears, multiply speeds shown as follows: 1st. = .323; 2nd.,6th. & 7th. = .515; 3rd.,8th., & 9th. = .720; 5th.,12th., & 13th = 1.405.

NOTE: With main box in reverse the direction of rotation on the P.T.O. output shaft will change.

NOTE: The AK & XK output flanges can not be used with the "A" & "C" ratios on the 489 Series P.T.O.s due to mounting stud interference. Use a RA or RB rotatable flange for the XK and the RA for the AK flange.

(1) Input Gear Part No. 5-P-1284
(2) Input Gear Part No. 5-P-1291
(3) Input Gear Part No. 5-P-1085
(4) Input Gear Part No. 5-P-1365
(5) Input Gear Part No. 5-P-1037
(6) Input Gear Part No. 5-P-1330
(7) Input Gear Part No. 5-P-1331
(8) Input Gear Part No. 5-P-1332

Parker Hannifin Corporation
Chelsea Products Division
Olive Branch, MS 38654 USA

T2130	T313LR21
T2130-B	
T313L	
T313L21	
T313LR	

LEFT SIDE ONLY

TRANSMISSION GEAR DATA:
L.H. 8-Bolt Opening Gear FORWARD of Centerline
49 Teeth - SPUR

PITCH LINE TO APERTURE FACE:
.6670" (16.9400MM)

RIGHT SIDE ONLY

TRANSMISSION GEAR DATA:
R.H. 6-Bolt Opening Gear FORWARD of Centerline
49 Teeth - SPUR

PITCH LINE TO APERTURE FACE:
1.0550" (26.8000MM)

Caution: Application Approval Required for P.T.O. Output Shaft Speeds Above 2500 R.P.M.

LEFT Side P.T.O. Model	Inter. Torq.	Dir. Rot.	Engine % Hi	Engine % Rev	Filler Block	Adapter Assy.	Stud Kit	RIGHT Side P.T.O. Model	Inter. Torq.	Dir. Rot.	Engine % Hi	Engine % Rev	Filler Block	Adapter Assy.	Stud Kit
ONE SPEED - TWO GEAR - MECHANICAL SHIFT															
680ZFDAX-*5 (6)	375	Opp	63		8-A-062		328170-190X								
680ZQDAX-*5 (7)	375	Opp	88		8-A-062		328170-190X								
680ZSDAX-*5 (8)	325	Opp	121		8-A-062		328170-190X								
823XBDAX-*5 (9)	500	Opp	41				Furnished								
823XMDAX-*5 (10)	500	Opp	73				Furnished								
823XRDAX-*5 (11)	400	Opp	100				Furnished								
880XBDAX-*5 (12)	500	Opp	41				Furnished								
880XGDAX-*5 (13)	500	Opp	53				Furnished								
880XMDAX-*5 (14)	500	Opp	73				Furnished								
880XRDAX-*5 (15)	400	Opp	100				Furnished								
880XTDAX-*5 (16)	350	Opp	129				Furnished								
ONE SPEED - TWO GEAR - POWERSHIFT (AIR)															
230XADAX-*5	250	Opp	32		7-A-062(P)	328481X	Furnished	230XADAX-*3	250	Opp	32		7-A-032		Furnished
230XBDAX-*5	250	Opp	42		7-A-062(P)	328481X	Furnished	230XBDAX-*3	250	Opp	42		7-A-032		Furnished
230XDDAX-*5	250	Opp	48		7-A-062(P)	328481X	Furnished	230XDDAX-*3	250	Opp	48		7-A-032		Furnished
230XKDAX-*5 (17)	250	Opp	65		7-A-062(P)	328481X	Furnished	230XKDAX-*3 (17)	250	Opp	65		7-A-032		Furnished
230XQDAX-*5 (18)	250	Opp	87		7-A-062(P)	328481X	Furnished	230XQDAX-*3 (18)	250	Opp	87		7-A-032		Furnished
236ZDDAX-*5 (5)	250	Opp	66		7-A-032(P)	310778X	Furnished	236ZDDAX-*3 (5)	250	Opp	66		7-A-140		Furnished
236ZKDAX-*5 (5)	250	Opp	84		7-A-032(P)	310778X	Furnished	236ZKDAX-*3 (5)	250	Opp	84		7-A-140		Furnished
236ZQDAX-*5 (5)	250	Opp	113		7-A-032(P)	310778X	Furnished	236ZQDAX-*3 (5)	250	Opp	113		7-A-140		Furnished
236ZUDAX-*5 (5)	225	Opp	130		7-A-032(P)	310778X	Furnished	236ZUDAX-*3 (5)	225	Opp	130		7-A-140		Furnished
885XBDAX-*5 (12)	500	Opp	41				Furnished								
885XGDAX-*5 (13)	500	Opp	53				Furnished								
885XMDAX-*5 (14)	500	Opp	73				Furnished								
ONE SPEED - FORWARD & REVERSE															
340SFDAX-*5 (19)	200	Opp	57	60	7-A-032(P)	328481X	Furnished	340SFDAX-*5 (19)	200	Opp	57	60	7-A-062		Furnished
863XBDAX-*5	500	Opp	41	51			Furnished								

Continued Next Page

CAUTION: Do not use geared adapters with 442 "A" and "C" ratios.

CAUTION: 660/680 Series: Applications above 1500 RPM, contact Chelsea Technical Service for approval.

NOTE: All speeds shown are with the main transmission in 4th.,10th.,or 11th speed, and rear box in neutral. For speeds with main transmission in other gears, multiply speeds shown as follows: 1st. = .323; 2nd.,6th. & 7th. = .515; 3rd.,8th., & 9th. = .720; 5th.,12th., & 13th = 1.405.

NOTE: With main box in reverse the direction of rotation on the P.T.O. output shaft will change.

NOTE: The AK & XK output flanges can not be used with the "A" & "C" ratios on the 489 Series P.T.O.s due to mounting stud interference. Use a RA or RB rotatable flange for the XK and the RA for the AK flange.

(5) Input Gear Part No. 5-P-1037
(6) Input Gear Part No. 5-P-1330
(7) Input Gear Part No. 5-P-1331
(8) Input Gear Part No. 5-P-1332
(9) Input Gear Part No. 5-P-636
(10) Input Gear Part No. 5-P-637
(11) Input Gear Part No. 5-P-808
(12) Input Gear Part No. 5-P-1120
(13) Input Gear Part No. 5-P-1174
(14) Input Gear Part No. 5-P-1121
(15) Input Gear Part No. 5-P-1122
(16) Input Gear Part No. 5-P-1123
(17) Input Gear Part No. 5-P-843
(18) Input Gear Part No. 5-P-844
(19) Input Gear Part No. 5-P-634

January 2008

Parker Hannifin Corporation
Chelsea Products Division
Olive Branch, MS 38654 USA

T2130	T313LR21
T2130-B	
T313L	
T313L21	
T313LR	

LEFT SIDE ONLY	RIGHT SIDE ONLY
TRANSMISSION GEAR DATA: L.H. 8-Bolt Opening Gear FORWARD of Centerline 49 Teeth - SPUR **PITCH LINE TO APERTURE FACE:** .6670" (16.9400MM)	**TRANSMISSION GEAR DATA:** R.H. 6-Bolt Opening Gear FORWARD of Centerline 49 Teeth - SPUR **PITCH LINE TO APERTURE FACE:** 1.0550" (26.8000MM)

Caution: Application Approval Required for P.T.O. Output Shaft Speeds Above 2500 R.P.M.

GEARED ADAPTERS

LEFT Side P.T.O. Model	Inter. Torq.	Dir. Rot.	Engine % Hi	Engine % Rev	Filler Block	Adapter Assy.	Stud Kit	RIGHT Side P.T.O. Model	Inter. Torq.	Dir. Rot.	Engine % Hi	Engine % Rev	Filler Block	Adapter Assy.	Stud Kit
628ZDAX-5DA		Eng			8-A-062		328170-190X	626ZDAX-3DA		Eng			7-A-140		Furnished
								630ZDAX-3DA		Eng			7-A-140		Furnished
								645ZDAX-3DA		Eng			7-A-140		Furnished

CAUTION: Do not use geared adapters with 442 "A" and "C" ratios.

CAUTION: 660/680 Series: Applications above 1500 RPM, contact Chelsea Technical Service for approval.

NOTE: All speeds shown are with the main transmission in 4th.,10th.,or 11th speed, and rear box in neutral. For speeds with main transmission in other gears, multiply speeds shown as follows: 1st. = .323; 2nd.,6th. & 7th. = .515; 3rd.,8th., & 9th. = .720; 5th.,12th., & 13th = 1.405.

NOTE: With main box in reverse the direction of rotation on the P.T.O. output shaft will change.

NOTE: The AK & XK output flanges can not be used with the "A" & "C" ratios on the 489 Series P.T.O.s due to mounting stud interference. Use a RA or RB rotatable flange for the XK and the RA for the AK flange.

Parker Hannifin Corporation
Chelsea Products Division
Olive Branch, MS 38654 USA

T2050-C	T2080-D
T2060-C	
T2070-C	
T2070-D	
T2080-C	

LEFT SIDE ONLY

TRANSMISSION GEAR DATA:
L.H. 8-Bolt Opening Gear FORWARD of Centerline
48 Teeth - SPUR

PITCH LINE TO APERTURE FACE:
.9770" (24.8200MM)

RIGHT SIDE ONLY

TRANSMISSION GEAR DATA:
R.H. 6-Bolt Opening Gear FORWARD of Centerline
48 Teeth - SPUR

PITCH LINE TO APERTURE FACE:
1.2520" (31.8000MM)

Caution: Application Approval Required for P.T.O. Output Shaft Speeds Above 2500 R.P.M.

LEFT Side P.T.O. Model	Inter. Torq.	Dir. Rot.	Engine % Hi	Engine % Rev	Filler Block	Adapter Assy.	Stud Kit	RIGHT Side P.T.O. Model	Inter. Torq.	Dir. Rot.	Engine % Hi	Engine % Rev	Filler Block	Adapter Assy.	Stud Kit
ONE SPEED - SINGLE GEAR - MECHANICAL SHIFT															
812ZKAHX-*3	400	Eng	112		8-A-165		328170-115X								
ONE SPEED - TWO GEAR - MECHANICAL SHIFT															
442ZAAHX-*5 (2)	250	Opp	66		7-A-032	328481X	Furnished	221ZCAHX-*3	250	Opp	75		7-A-062 7-A-032 (1)		Furnished
442ZCAHX-*5 (3)	250	Opp	84		7-A-032	328481X	Furnished	221ZEAHX-*3	250	Opp	86		7-A-032		Furnished
442ZFAHX-*5 (4)	250	Opp	104		7-A-032	328481X	Furnished	221ZLAHX-*3	200	Opp	116		7-A-032		Furnished
442ZHAHX-*5 (5)	250	Opp	121		7-A-032	328481X	Furnished	221ZPAHX-*3	200	Opp	140		7-A-032		Furnished
442ZLAHX-*5 (6)	250	Opp	134		7-A-032	328481X	Furnished	442ZAAHX-*3 (2)	250	Opp	66		7-A-032		Furnished
442ZQAHX-*5 (6)	225	Opp	145		7-A-032	328481X	Furnished	442ZCAHX-*3 (3)	250	Opp	84		7-A-032		Furnished
442ZRAHX-*5 (6)	225	Opp	167		7-A-032	328481X	Furnished	442ZFAHX-*3 (4)	250	Opp	104		7-A-032		Furnished
442ZSAHX-*5 (6)	200	Opp	199		7-A-032	328481X	Furnished	442ZHAHX-*3 (5)	250	Opp	121		7-A-032		Furnished
442ZUAHX-*5 (6)	195	Opp	237		7-A-032	328481X	Furnished	442ZLAHX-*3 (6)	250	Opp	134		7-A-032		Furnished
442ZWAHX-*5 (6)	175	Opp	279		7-A-032	328481X	Furnished	442ZQAHX-*3 (6)	225	Opp	145		7-A-032		Furnished
442ZXAHX-*5 (6)	140	Opp	330		7-A-032	328481X	Furnished	442ZRAHX-*3 (6)	225	Opp	167		7-A-032		Furnished
823ZBAHX-*3 (10)	500	Opp	71		8-A-700		328170-133X	442ZSAHX-*3 (6)	200	Opp	199		7-A-032		Furnished
823ZDAHX-*3 (11)	500	Opp	84		8-A-700		328170-133X	442ZUAHX-*3 (6)	195	Opp	237		7-A-032		Furnished
823ZGAHX-*3 (12)	500	Opp	91		8-A-700		328170-133X	442ZWAHX-*3 (6)	175	Opp	279		7-A-032		Furnished
823ZJAHX-*3 (13)	500	Opp	107		8-A-700		328170-133X	442ZXAHX-*3 (6)	140	Opp	330		7-A-032		Furnished
823ZMAHX-*3 (14)	500	Opp	126		8-A-700		328170-133X	660ZFAHX-*3 (7)	375	Opp	104		7-A-032		Furnished
823ZRAHX-*3 (15)	400	Opp	173		8-A-700		328170-133X	660ZQAHX-*3 (8)	375	Opp	145		7-A-032		Furnished
880ZBAHX-*3 (16)	500	Opp	71		8-A-700		328170-133X	660ZSAHX-*3 (9)	325	Opp	199		7-A-032		Furnished
880ZDAHX-*3 (17)	500	Opp	84		8-A-700		328170-133X								
880ZGAHX-*3 (18)	500	Opp	91		8-A-700		328170-133X								
880ZJAHX-*3 (19)	500	Opp	107		8-A-700		328170-133X								
880ZMAHX-*3 (20)	500	Opp	126		8-A-700		328170-133X								
880ZQAHX-*3 (21)	450	Opp	147		8-A-700		328170-133X								
880ZRAHX-*3 (22)	400	Opp	173		8-A-700		328170-133X								
880ZTAHX-*3 (23)	350	Opp	223		8-A-700		328170-133X								

Continued Next Page

CAUTION: 660/680 Series: Applications above 1500 RPM, contact Chelsea Technical Service for approval.

(1) Filler block furnished with P.T.O. but not required
(2) Input Gear Part No. 5-P-1280
(3) Input Gear Part No. 5-P-1287
(4) Input Gear Part No. 5-P-1077
(5) Input Gear Part No. 5-P-1364
(6) Input Gear Part No. 5-P-1004
(7) Input Gear Part No. 5-P-1242
(8) Input Gear Part No. 5-P-1246
(9) Input Gear Part No. 5-P-1322
(10) Input Gear Part No. 5-P-285
(11) Input Gear Part No. 5-P-971
(12) Input Gear Part No. 5-P-980
(13) Input Gear Part No. 5-P-325
(14) Input Gear Part No. 5-P-283
(15) Input Gear Part No. 5-P-721
(16) Input Gear Part No. 5-P-1100
(17) Input Gear Part No. 5-P-1101
(18) Input Gear Part No. 5-P-1135
(19) Input Gear Part No. 5-P-1102
(20) Input Gear Part No. 5-P-1103
(21) Input Gear Part No. 5-P-1385
(22) Input Gear Part No. 5-P-1104
(23) Input Gear Part No. 5-P-1105

January 2008

Parker Hannifin Corporation
Chelsea Products Division
Olive Branch, MS 38654 USA

T2050-C	T2080-D
T2060-C	
T2070-C	
T2070-D	
T2080-C	

LEFT SIDE ONLY

TRANSMISSION GEAR DATA:
L.H. 8-Bolt Opening Gear FORWARD of Centerline
48 Teeth - SPUR

PITCH LINE TO APERTURE FACE:
.9770" (24.8200MM)

RIGHT SIDE ONLY

TRANSMISSION GEAR DATA:
R.H. 6-Bolt Opening Gear FORWARD of Centerline
48 Teeth - SPUR

PITCH LINE TO APERTURE FACE:
1.2520" (31.8000MM)

Caution: Application Approval Required for P.T.O. Output Shaft Speeds Above 2500 R.P.M.

LEFT Side P.T.O. Model	Inter. Torq.	Dir. Rot.	Engine % Hi	Engine % Rev	Filler Block	Adapter Assy.	Stud Kit	RIGHT Side P.T.O. Model	Inter. Torq.	Dir. Rot.	Engine % Hi	Engine % Rev	Filler Block	Adapter Assy.	Stud Kit
ONE SPEED - TWO GEAR - POWERSHIFT (AIR)															
236ZDAHX-*5 (6)	250	Opp	109		7-A-032	328481X	Furnished	236ZDAHX-*3 (6)	250	Opp	109		7-A-032		Furnished
236ZKAHX-*5 (6)	250	Opp	139		7-A-032	328481X	Furnished	236ZKAHX-*3 (6)	250	Opp	139		7-A-032		Furnished
236ZQAHX-*5 (6)	250	Opp	187		7-A-032	328481X	Furnished	236ZQAHX-*3 (6)	250	Opp	187		7-A-032		Furnished
236ZUAHX-*5 (6)	225	Opp	215		7-A-032	328481X	Furnished	236ZUAHX-*3 (6)	225	Opp	215		7-A-032		Furnished
885ZBAHX-*3 (16)	500	Opp	71		8-A-700		328170-133X								
885ZGAHX-*3 (18)	500	Opp	91		8-A-700		328170-133X								
885ZJAHX-*3 (19)	500	Opp	107		8-A-700		328170-133X								
885ZMAHX-*3 (20)	500	Opp	126		8-A-700		328170-133X								
ONE SPEED - FORWARD & REVERSE															
								352ZSAHX-*3 (6)	140	Opp	202	261	7-A-032		Furnished
ONE SPEED - DUAL SHAFT															
								452ZSAHX-*3 (6)	140	Opp	202		7-A-032		Furnished
GEARED ADAPTERS															
								626ZDAX-3DA		Eng			7-A-032		Furnished
								630ZDAX-3DA		Eng			7-A-062		Furnished
								645ZDAX-3DA		Eng			7-A-062		Furnished

CAUTION: 660/680 Series: Applications above 1500 RPM, contact Chelsea Technical Service for approval.

(6) Input Gear Part No. 5-P-1004
(16) Input Gear Part No. 5-P-1100
(18) Input Gear Part No. 5-P-1135
(19) Input Gear Part No. 5-P-1102
(20) Input Gear Part No. 5-P-1103

T2060-A
T306G

LEFT SIDE ONLY

TRANSMISSION GEAR DATA:
L.H. 8-Bolt Opening Gear FORWARD of Centerline
40 Teeth - SPUR

PITCH LINE TO APERTURE FACE:
1.9280" (48.9700MM)

RIGHT SIDE ONLY

TRANSMISSION GEAR DATA:
R.H. 6-Bolt Opening Gear FORWARD of Centerline
40 Teeth - SPUR

PITCH LINE TO APERTURE FACE:
2.2040" (55.9800MM)

Caution: Application Approval Required for P.T.O. Output Shaft Speeds Above 2500 R.P.M.

ONE SPEED - TWO GEAR - MECHANICAL SHIFT

LEFT Side P.T.O. Model	Inter. Torq.	Dir. Rot.	Engine % Hi	Engine % Rev	Filler Block	Adapter Assy.	Stud Kit	RIGHT Side P.T.O. Model	Inter. Torq.	Dir. Rot.	Engine % Hi	Engine % Rev	Filler Block	Adapter Assy.	Stud Kit
290KFHUX-*5 (1)	180	Opp	80		7-A-093 (2)	328564X	7170-3X	290KFHUX-*3 (1)	180	Opp	80		7-A-270		7170-4X
290KLHUX-*5 (3)	180	Opp	94		7-A-093	328564X	7170-3X	290KLHUX-*3 (3)	180	Opp	94		7-A-270		7170-4X
290KQHUX-*5 (4)	180	Opp	124		7-A-093	328564X	7170-3X	290KQHUX-*3 (4)	180	Opp	124		7-A-270		7170-4X
290KUHUX-*5 (5)	180	Opp	149		7-A-093	328564X	7170-3X	290KUHUX-*3 (5)	180	Opp	149		7-A-270		7170-4X

NOTE: The "XK" flange cannot be used with the "L" and "U" ratio because of interference with the transmission.

(1) Input Gear Part No. 5-P-1221
(2) Filler block furnished with P.T.O.
(3) Input Gear Part No. 5-P-1222
(4) Input Gear Part No. 5-P-1223
(5) Input Gear Part No. 5-P-1224

T2110-B

LEFT SIDE ONLY

TRANSMISSION GEAR DATA:
L.H. 8-Bolt Opening Gear FORWARD of Centerline
49 Teeth - SPUR

PITCH LINE TO APERTURE FACE:
.6670" (16.9400MM)

RIGHT SIDE ONLY

TRANSMISSION GEAR DATA:
R.H. 6-Bolt Opening Gear FORWARD of Centerline
49 Teeth - SPUR

PITCH LINE TO APERTURE FACE:
1.0550" (26.7970MM)

Caution: Application Approval Required for P.T.O. Output Shaft Speeds Above 2500 R.P.M.

LEFT Side P.T.O. Model	Inter. Torq.	Dir. Rot.	Engine % Hi	Engine % Rev	Filler Block	Adapter Assy.	Stud Kit	RIGHT Side P.T.O. Model	Inter. Torq.	Dir. Rot.	Engine % Hi	Engine % Rev	Filler Block	Adapter Assy.	Stud Kit
ONE SPEED - SINGLE GEAR - MECHANICAL SHIFT															
812XKDAX-*5	400	Eng	77				Furnished								
ONE SPEED - TWO GEAR - MECHANICAL SHIFT															
221ZCDAX-*5 (1)	250	Opp	54		7-A-062(P)	328564X	Furnished	221XCDAX-*3 (1)	250	Opp	54		7-A-032		Furnished
221ZEDAX-*5 (1)	250	Opp	59		7-A-062(P)	328564X	Furnished	221XEDAX-*3 (1)	250	Opp	59		7-A-032		Furnished
221ZLDAX-*5 (1)	200	Opp	80		7-A-062(P)	328564X	Furnished	221XLDAX-*3 (1)	200	Opp	80		7-A-032		Furnished
221ZPDAX-*5 (1)	200	Opp	97		7-A-062(P)	328564X	Furnished	221XPDAX-*3 (1)	200	Opp	97		7-A-032		Furnished
442ZADAX-*5 (2)	250	Opp	47		7-A-032(P)	310778X	Furnished	442ZADAX-*3 (2)	250	Opp	47		7-A-140		Furnished
442ZCDAX-*5 (3)	250	Opp	60		7-A-032(P)	310778X	Furnished	442ZCDAX-*3 (3)	250	Opp	60		7-A-140		Furnished
442ZFDAX-*5 (4)	250	Opp	74		7-A-032(P)	310778X	Furnished	442ZFDAX-*3 (4)	250	Opp	74		7-A-140		Furnished
442ZHDAX-*5 (5)	250	Opp	86		7-A-032(P)	310778X	Furnished	442ZHDAX-*3 (5)	250	Opp	86		7-A-140		Furnished
442ZLDAX-*5 (6)	250	Opp	96		7-A-032(P)	310778X	Furnished	442ZLDAX-*3 (6)	250	Opp	96		7-A-140		Furnished
442ZQDAX-*5 (6)	225	Opp	103		7-A-032(P)	310778X	Furnished	442ZQDAX-*3 (6)	225	Opp	103		7-A-140		Furnished
442ZRDAX-*5 (6)	225	Opp	120		7-A-032(P)	310778X	Furnished	442ZRDAX-*3 (6)	225	Opp	120		7-A-140		Furnished
442ZSDAX-*5 (6)	200	Opp	142		7-A-032(P)	310778X	Furnished	442ZSDAX-*3 (6)	200	Opp	142		7-A-140		Furnished
442ZUDAX-*5 (6)	195	Opp	169		7-A-032(P)	310778X	Furnished	442ZUDAX-*3 (6)	195	Opp	169		7-A-140		Furnished
442ZWDAX-*5 (6)	175	Opp	199		7-A-032(P)	310778X	Furnished	442ZWDAX-*3 (6)	175	Opp	199		7-A-140		Furnished
442ZXDAX-*5 (6)	140	Opp	236		7-A-032(P)	310778X	Furnished	442ZXDAX-*3 (6)	140	Opp	236		7-A-140		Furnished
489ZFDAX-*5 (4)	250	Opp	74		8-A-062		328170-190X	660ZFDAX-*3 (7)	375	Opp	74		7-A-140		Furnished
489ZHDAX-*5 (5)	250	Opp	86		8-A-062		328170-190X	660ZQDAX-*3 (8)	375	Opp	103		7-A-140		Furnished
489ZLDAX-*5 (6)	250	Opp	96		8-A-062		328170-190X	660ZSDAX-*3 (9)	325	Opp	142		7-A-140		Furnished
489ZQDAX-*5 (6)	225	Opp	103		8-A-062		328170-190X								
489ZRDAX-*5 (6)	225	Opp	120		8-A-062		328170-190X								
489ZSDAX-*5 (6)	200	Opp	142		8-A-062		328170-190X								
489ZUDAX-*5 (6)	195	Opp	169		8-A-062		328170-190X								
489ZWDAX-*5 (6)	175	Opp	199		8-A-062		328170-190X								
489ZXDAX-*5 (6)	140	Opp	236		8-A-062		328170-190X								
680ZFDAX-*5 (7)	375	Opp	74		8-A-062		328170-190X								
680ZQDAX-*5 (8)	375	Opp	103		8-A-062		328170-190X								

Continued Next Page

CAUTION: 660/680 Series: Applications above 1500 RPM, contact Chelsea Technical Service for approval.

NOTE: For PTO output speeds on the T2110B Main Section, see Mack application MAK-24.

NOTE: The Rear Section P.T.O. speeds are shown with the Main Section in 5th gear or Direct and the Rear Section in Neutral.

NOTE: For all other Main Section gear shift positions use the following multiplication factors to determine your PTO output speeds: 1st gear = .255, 2nd & 7th gear = .450, 3rd & 8th gear = .590, 4th & 9th gear = .629 and 6th & 11th gear = 1.067.

(1) Input Gear Part No. 5-P-633
(2) Input Gear Part No. 5-P-1284
(3) Input Gear Part No. 5-P-1291
(4) Input Gear Part No. 5-P-1085
(5) Input Gear Part No. 5-P-1365
(6) Input Gear Part No. 5-P-1037
(7) Input Gear Part No. 5-P-1330
(8) Input Gear Part No. 5-P-1331
(9) Input Gear Part No. 5-P-1332

Parker Hannifin Corporation
Chelsea Products Division
Olive Branch, MS 38654 USA

T2110-B

LEFT SIDE ONLY

TRANSMISSION GEAR DATA:
L.H. 8-Bolt Opening Gear FORWARD of Centerline
49 Teeth - SPUR

PITCH LINE TO APERTURE FACE:
.6670" (16.9400MM)

RIGHT SIDE ONLY

TRANSMISSION GEAR DATA:
R.H. 6-Bolt Opening Gear FORWARD of Centerline
49 Teeth - SPUR

PITCH LINE TO APERTURE FACE:
1.0550" (26.7970MM)

Caution: Application Approval Required for P.T.O. Output Shaft Speeds Above 2500 R.P.M.

LEFT Side P.T.O. Model	Inter. Torq.	Dir. Rot.	Engine % Hi	Engine % Rev	Filler Block	Adapter Assy.	Stud Kit	RIGHT Side P.T.O. Model	Inter. Torq.	Dir. Rot.	Engine % Hi	Engine % Rev	Filler Block	Adapter Assy.	Stud Kit
ONE SPEED - TWO GEAR - MECHANICAL SHIFT															
680ZSDAX-*5 (9)	325	Opp	142		8-A-062		328170-190X								
823XBDAX-*5	500	Opp	48				Furnished								
823XMDAX-*5 (10)	500	Opp	86				Furnished								
823XRDAX-*5 (11)	400	Opp	118				Furnished								
880XBDAX-*5 (12)	500	Opp	48				Furnished								
880XGDAX-*5 (13)	500	Opp	62				Furnished								
880XMDAX-*5 (14)	500	Opp	86				Furnished								
880XRDAX-*5 (15)	400	Opp	118				Furnished								
880XTDAX-*5 (16)	350	Opp	152				Furnished								
ONE SPEED - TWO GEAR - POWERSHIFT (AIR)															
230XKDAX-*5 (17)	250	Opp	77		7-A-062(P)	328481X	Furnished	230XKDAX-*3 (17)	250	Opp	77		7-A-032		Furnished
230XQDAX-*5 (18)	250	Opp	102		7-A-062(P)	328481X	Furnished	230XQDAX-*3 (18)	250	Opp	102		7-A-032		Furnished
236ZDDAX-*5 (6)	250	Opp	78		7-A-032(P)	310778X	Furnished	236ZDDAX-*3 (6)	250	Opp	78		7-A-140		Furnished
236ZKDAX-*5 (6)	250	Opp	100		7-A-032(P)	310778X	Furnished	236ZKDAX-*3 (6)	250	Opp	100		7-A-140		Furnished
236ZQDAX-*5 (6)	250	Opp	134		7-A-032(P)	310778X	Furnished	236ZQDAX-*3 (6)	250	Opp	134		7-A-140		Furnished
236ZUDAX-*5 (6)	225	Opp	153		7-A-032(P)	310778X	Furnished	236ZUDAX-*3 (6)	225	Opp	153		7-A-140		Furnished
885XBDAX-*5 (12)	500	Opp	48				Furnished								
885XGDAX-*5 (13)	500	Opp	62				Furnished								
885XMDAX-*5 (14)	500	Opp	86				Furnished								
ONE SPEED - FORWARD & REVERSE															
340SFDAX-*5 (19)	200	Opp	68	71	7-A-062(P)	328481X	Furnished	340SFDAX-*3 (19)	200	Opp	68	71	7-A-062		Furnished
863XBDAX-*5	500	Opp	48	60			Furnished								
GEARED ADAPTERS															
628ZDAX-5DA		Eng			8-A-062		328170-190X	626ZDAX-3DA		Eng			7-A-140		Furnished
								630ZDAX-3DA		Eng			7-A-140		Furnished
								645ZDAX-3DA		Eng			7-A-140		Furnished

CAUTION: 660/680 Series: Applications above 1500 RPM, contact Chelsea Technical Service for approval.

NOTE: For PTO output speeds on the T2110B Main Section, see Mack application MAK-24.

NOTE: The Rear Section P.T.O. speeds are shown with the Main Section in 5th gear or Direct and the Rear Section in Neutral.

NOTE: For all other Main Section gear shift positions use the following multiplication factors to determine your PTO output speeds: 1st gear = .255, 2nd & 7th gear = .450, 3rd & 8th gear = .590, 4th & 9th gear = .629 and 6th & 11th gear = 1.067.

(6) Input Gear Part No. 5-P-1037
(9) Input Gear Part No. 5-P-1332
(10) Input Gear Part No. 5-P-637
(11) Input Gear Part No. 5-P-808
(12) Input Gear Part No. 5-P-1120
(13) Input Gear Part No. 5-P-1174
(14) Input Gear Part No. 5-P-1121
(15) Input Gear Part No. 5-P-1122
(16) Input Gear Part No. 5-P-1123
(17) Input Gear Part No. 5-P-843
(18) Input Gear Part No. 5-P-844
(19) Input Gear Part No. 5-P-634

January 2008

Parker Hannifin Corporation
Chelsea Products Division
Olive Branch, MS 38654 USA

T310
T310-M
T310ME

LEFT SIDE ONLY

TRANSMISSION GEAR DATA:
L.H. 8-Bolt Opening Gear FORWARD of Centerline
53 Teeth - SPUR

PITCH LINE TO APERTURE FACE:
0.8100" (20.5700MM)

RIGHT SIDE ONLY

TRANSMISSION GEAR DATA:
R.H. 6-Bolt Opening Gear FORWARD of Centerline
53 Teeth - SPUR

PITCH LINE TO APERTURE FACE:
1.0800" (27.5600MM)

Caution: Application Approval Required for P.T.O. Output Shaft Speeds Above 2500 R.P.M.

LEFT Side P.T.O. Model	Inter. Torq.	Dir. Rot.	Engine % Hi	Engine % Rev	Filler Block	Adapter Assy.	Stud Kit	RIGHT Side P.T.O. Model	Inter. Torq.	Dir. Rot.	Engine % Hi	Engine % Rev	Filler Block	Adapter Assy.	Stud Kit
ONE SPEED - SINGLE GEAR - MECHANICAL SHIFT															
812XKDAX-*5	400	Eng	95				Furnished	100XRAHX-*3 (1)	125	Opp	148			328554-2X	Furnished
ONE SPEED - TWO GEAR - MECHANICAL SHIFT															
221ZCDAX-*5	250	Opp	66			328564X	Furnished	221XCAHX-*3	250	Eng	65		7-A-032(P)(2)	328554-2X	Furnished
221ZEDAX-*5	250	Opp	73			328564X	Furnished	221XEAHX-*3	250	Eng	75			328554-2X	Furnished
221ZLDAX-*5	200	Opp	98			328564X	Furnished	221XLAHX-*3	200	Eng	102			328554-2X	Furnished
221ZPDAX-*5	200	Opp	120			328564X	Furnished	221XPAHX-*3	200	Eng	123			328554-2X	Furnished
442ZADAX-*5 (6)	250	Opp	57		7-A-062(P)	328481X	Furnished	221XCDAX-*3	250	Opp	66				Furnished
442ZCDAX-*5 (7)	250	Opp	74		7-A-062(P)	328481X	Furnished	221XEDAX-*3	250	Opp	73				Furnished
442ZFDAX-*5 (8)	250	Opp	92		7-A-062(P)	328481X	Furnished	221XLDAX-*3	200	Opp	98				Furnished
442ZHDAX-*5 (9)	250	Opp	107		7-A-062(P)	328481X	Furnished	221XPDAX-*3	200	Opp	120				Furnished
442ZLDAX-*5 (10)	250	Opp	119		7-A-062(P)	328481X	Furnished	442XFAHX-*3 (3)	250	Eng	91			328554-2X	Furnished
442ZQDAX-*5 (10)	225	Opp	128		7-A-062(P)	328481X	Furnished	442XHAHX-*3 (4)	250	Eng	107			328554-2X	Furnished
442ZRDAX-*5 (10)	225	Opp	149		7-A-062(P)	328481X	Furnished	442XLAHX-*3 (5)	250	Eng	118			328554-2X	Furnished
442ZSDAX-*5 (10)	200	Opp	178		7-A-062(P)	328481X	Furnished	442XQAHX-*3 (5)	225	Eng	128			328554-2X	Furnished
442ZUDAX-*5 (10)	195	Opp	212		7-A-062(P)	328481X	Furnished	442XRAHX-*3 (5)	225	Eng	148			328554-2X	Furnished
442ZWDAX-*5 (10)	175	Opp	250		7-A-032(P)	328481X	Furnished	442XSAHX-*3 (5)	200	Eng	177			328554-2X	Furnished
442ZXDAX-*5 (10)	140	Opp	296		7-A-062(P)	328481X	Furnished	442XUAHX-*3 (5)	195	Eng	211			328554-2X	Furnished
489ZADAX-*5 (6)	250	Opp	57				Furnished	442XWAHX-*3 (5)	175	Eng	248			328554-2X	Furnished
489ZCDAX-*5 (7)	250	Opp	74				Furnished	442XXAHX-*3 (5)	140	Eng	294			328554-2X	Furnished
489ZFDAX-*5 (8)	250	Opp	92				Furnished	442ZADAX-*3 (6)	250	Opp	57		7-A-093		Furnished
489ZHDAX-*5 (9)	250	Opp	107				Furnished	442ZCDAX-*3 (7)	250	Opp	74		7-A-093		Furnished
489ZLDAX-*5 (10)	250	Opp	119				Furnished	442ZFDAX-*3 (8)	250	Opp	92		7-A-093		Furnished
489ZQDAX-*5 (10)	225	Opp	128				Furnished	442ZHDAX-*3 (9)	250	Opp	107		7-A-093		Furnished
489ZRDAX-*5 (10)	225	Opp	149				Furnished	442ZLDAX-*3 (10)	250	Opp	119		7-A-093		Furnished
489ZSDAX-*5 (10)	200	Opp	178				Furnished	442ZQDAX-*3 (10)	225	Opp	128		7-A-093		Furnished
489ZUDAX-*5 (10)	195	Opp	212				Furnished	442ZRDAX-*3 (10)	225	Opp	149		7-A-093		Furnished
489ZWDAX-*5 (10)	175	Opp	250				Furnished	442ZSDAX-*3 (10)	200	Opp	178		7-A-093		Furnished
489ZXDAX-*5 (10)	140	Opp	296				Furnished	442ZUDAX-*3 (10)	195	Opp	212		7-A-093		Furnished

Continued Next Page

CAUTION: Do not use geared adapters with 442 "A" and "C" ratios.

CAUTION: 660/680 Series: Applications above 1500 RPM, contact Chelsea Technical Service for approval.

NOTE: Using the 328554-2X adapter will permit P.T.O. installation on trucks with set back front axle.

NOTE: The 812 series with a direct mount pump flange or a universal joint larger than the 1000 series will interfere with the reverse idler bulge.

NOTE: The AK & XK output flanges can not be used with the "A" & "C" ratios on the 489 Series PTOs due to mounting stud interference. Use a RA or RB rotatable flange for the XK and the RA for the AK flange.

(1) Gear and Shaft Kit No. KXA-2-P-565
(2) Filler block furnished with P.T.O.
(3) Input Gear Part No. 5-P-1077
(4) Input Gear Part No. 5-P-1364
(5) Input Gear Part No. 5-P-1004
(6) Input Gear Part No. 5-P-1284
(7) Input Gear Part No. 5-P-1291
(8) Input Gear Part No. 5-P-1085
(9) Input Gear Part No. 5-P-1365
(10) Input Gear Part No. 5-P-1037

Parker Hannifin Corporation
Chelsea Products Division
Olive Branch, MS 38654 USA

T310
T310-M
T310ME

LEFT SIDE ONLY

TRANSMISSION GEAR DATA:
L.H. 8-Bolt Opening Gear FORWARD of Centerline
53 Teeth - SPUR

PITCH LINE TO APERTURE FACE:
0.8100" (20.5700MM)

RIGHT SIDE ONLY

TRANSMISSION GEAR DATA:
R.H. 6-Bolt Opening Gear FORWARD of Centerline
53 Teeth - SPUR

PITCH LINE TO APERTURE FACE:
1.0800" (27.5600MM)

Caution: Application Approval Required for P.T.O. Output Shaft Speeds Above 2500 R.P.M.

LEFT Side P.T.O. Model	Inter. Torq.	Dir. Rot.	Engine % Hi	Engine % Rev	Filler Block	Adapter Assy.	Stud Kit	RIGHT Side P.T.O. Model	Inter. Torq.	Dir. Rot.	Engine % Hi	Engine % Rev	Filler Block	Adapter Assy.	Stud Kit
ONE SPEED - TWO GEAR - MECHANICAL SHIFT															
680ZFDAX-*5 (11)	375	Opp	92				Furnished	442ZWDAX-*3 (10)	175	Opp	250		7-A-093		Furnished
680ZQDAX-*5 (12)	375	Opp	128				Furnished	442ZXDAX-*3 (10)	140	Opp	296		7-A-093		Furnished
680ZSDAX-*5 (13)	325	Opp	178				Furnished	660ZFDAX-*3 (11)	375	Opp	92		7-A-062		Furnished
823XBDAX-*5	500	Opp	59				Furnished	660ZQDAX-*3 (12)	375	Opp	128		7-A-062		Furnished
823XMDAX-*5 (14)	500	Opp	106				Furnished	660ZSDAX-*3 (13)	325	Opp	178		7-A-062		Furnished
823XRDAX-*5 (15)	400	Opp	148				Furnished								
880XBDAX-*5 (16)	500	Opp	59				Furnished								
880XGDAX-*5 (17)	500	Opp	76				Furnished								
880XMDAX-*5 (18)	500	Opp	106				Furnished								
880XRDAX-*5 (19)	400	Opp	148				Furnished								
880XTDAX-*5 (20)	350	Opp	191				Furnished								
ONE SPEED - TWO GEAR - POWERSHIFT (AIR)															
230XADAX-*5	250	Opp	46			328481X	Furnished	230XADAX-*3	250	Opp	46				Furnished
230XBDAX-*5	250	Opp	60			328481X	Furnished	230XBDAX-*3	250	Opp	60				Furnished
230XDDAX-*5	250	Opp	70			328481X	Furnished	230XDDAX-*3	250	Opp	70				Furnished
230XKDAX-*5 (21)	250	Opp	96			328481X	Furnished	230XKDAX-*3 (21)	250	Opp	95				Furnished
230XQDAX-*5 (22)	250	Opp	127			328481X	Furnished	230XQDAX-*3 (22)	250	Opp	127				Furnished
236ZDDAX-*5 (10)	250	Opp	96		7-A-062(P)	328481X	Furnished	236XDAHX-*3 (5)	250	Eng	95			328554-2X	Furnished
236ZKDAX-*5 (10)	250	Opp	124		7-A-062(P)	328481X	Furnished	236XKAHX-*3 (5)	250	Eng	123			328554-2X	Furnished
236ZQDAX-*5 (10)	250	Opp	167		7-A-032(P)	328481X	Furnished	236XQAHX-*3 (5)	250	Eng	166			328554-2X	Furnished
236ZUDAX-*5 (10)	225	Opp	192		7-A-062(P)	328481X	Furnished	236XUAHX-*3 (5)	225	Eng	190			328554-2X	Furnished
885XBDAX-*5 (16)	500	Opp	59				Furnished	236ZDDAX-*3 (10)	250	Opp	96		7-A-093		Furnished
885XGDAX-*5 (17)	500	Opp	76				Furnished	236ZKDAX-*3 (10)	250	Opp	124		7-A-093		Furnished
885XMDAX-*5 (18)	500	Opp	106				Furnished	236ZQDAX-*3 (10)	250	Opp	167		7-A-093		Furnished
								236ZUDAX-*3 (10)	225	Opp	192		7-A-093		Furnished
ONE SPEED - FORWARD & REVERSE															
340SFDAX-*5 (23)	200	Opp	83	90		328481X	Furnished	340SFDAX-*5 (23)	200	Opp	83	90			Furnished

Continued Next Page

CAUTION: Do not use geared adapters with 442 "A" and "C" ratios.

CAUTION: 660/680 Series: Applications above 1500 RPM, contact Chelsea Technical Service for approval.

NOTE: Using the 328554-2X adapter will permit P.T.O. installation on trucks with set back front axle.

NOTE: The 812 series with a direct mount pump flange or a universal joint larger than the 1000 series will interfere with the reverse idler bulge.

NOTE: The AK & XK output flanges can not be used with the "A" & "C" ratios on the 489 Series PTOs due to mounting stud interference. Use a RA or RB rotatable flange for the XK and the RA for the AK flange.

(5) Input Gear Part No. 5-P-1004
(10) Input Gear Part No. 5-P-1037
(11) Input Gear Part No. 5-P-1330
(12) Input Gear Part No. 5-P-1331
(13) Input Gear Part No. 5-P-1332
(14) Input Gear Part No. 5-P-637
(15) Input Gear Part No. 5-P-808
(16) Input Gear Part No. 5-P-1120
(17) Input Gear Part No. 5-P-1174
(18) Input Gear Part No. 5-P-1121
(19) Input Gear Part No. 5-P-1122
(20) Input Gear Part No. 5-P-1123
(21) Input Gear Part No. 5-P--P-843
(22) Input Gear Part No. 5-P--P-844
(23) Input Gear Part No. 5-P-634

January 2008

Parker Chelsea
Parker Hannifin Corporation
Chelsea Products Division
Olive Branch, MS 38654 USA

T310
T310-M
T310ME

LEFT SIDE ONLY

TRANSMISSION GEAR DATA:
L.H. 8-Bolt Opening Gear FORWARD of Centerline
53 Teeth - SPUR

PITCH LINE TO APERTURE FACE:
0.8100" (20.5700MM)

RIGHT SIDE ONLY

TRANSMISSION GEAR DATA:
R.H. 6-Bolt Opening Gear FORWARD of Centerline
53 Teeth - SPUR

PITCH LINE TO APERTURE FACE:
1.0800" (27.5600MM)

Caution: Application Approval Required for P.T.O. Output Shaft Speeds Above 2500 R.P.M.

LEFT Side P.T.O. Model	Inter. Torq.	Dir. Rot.	Engine % Hi	Engine % Rev	Filler Block	Adapter Assy.	Stud Kit	RIGHT Side P.T.O. Model	Inter. Torq.	Dir. Rot.	Engine % Hi	Engine % Rev	Filler Block	Adapter Assy.	Stud Kit
ONE SPEED - FORWARD & REVERSE															
863XBDAX-*5	500	Opp	59	75			Furnished	352XSAHX-*3 (5)	140	Eng	179	234		328554-2X	Furnished
ONE SPEED - DUAL SHAFT															
								452XSAHX-*3 (5)	140	Eng	179			328554-2X	Furnished
GEARED ADAPTERS															
628ZDAX-5DA		Eng					Furnished	626ZDAX-3DA		Eng			7-A-062		Furnished
								630ZDAX-3DA		Eng			7-A-062		Furnished
								645ZDAX-3DA		Eng			7-A-062		Furnished

CAUTION: Do not use geared adapters with 442 "A" and "C" ratios.

CAUTION: 660/680 Series: Applications above 1500 RPM, contact Chelsea Technical Service for approval.

NOTE: Using the 328554-2X adapter will permit P.T.O. installation on trucks with set back front axle.

NOTE: The 812 series with a direct mount pump flange or a universal joint larger than the 1000 series will interfere with the reverse idler bulge.

NOTE: The AK & XK output flanges can not be used with the "A" & "C" ratios on the 489 Series PTOs due to mounting stud interference. Use a RA or RB rotatable flange for the XK and the RA for the AK flange.

(5) Input Gear Part No. 5-P-1004

Parker Hannifin Corporation
Chelsea Products Division
Olive Branch, MS 38654 USA

TM308

TM309

LEFT SIDE ONLY

TRANSMISSION GEAR DATA:
L.H. 8-Bolt Opening Gear REAR of Centerline

54 Teeth - SPUR

PITCH LINE TO APERTURE FACE:
0.8100" (20.5700MM)

RIGHT SIDE ONLY

TRANSMISSION GEAR DATA:
R.H. 6-Bolt Opening Gear REAR of Centerline

54 Teeth - SPUR

PITCH LINE TO APERTURE FACE:
1.0850" (27.5590MM)

Caution: Application Approval Required for P.T.O. Output Shaft Speeds Above 2500 R.P.M.

LEFT Side P.T.O. Model	Inter. Torq.	Dir. Rot.	Engine % Hi	Engine % Rev	Filler Block	Adapter Assy.	Stud Kit	RIGHT Side P.T.O. Model	Inter. Torq.	Dir. Rot.	Engine % Hi	Engine % Rev	Filler Block	Adapter Assy.	Stud Kit
ONE SPEED - TWO GEAR - MECHANICAL SHIFT															
442ZFDAX-*6 (1)	250	Opp	94		7-A-062(P)	328481X	Furnished	442ZFDAX-*4 (1)	250	Opp	94		7-A-062		Furnished
442ZHDAX-*6 (2)	250	Opp	109		7-A-062(P)	328481X	Furnished	442ZHDAX-*4 (2)	250	Opp	109		7-A-062		Furnished
442ZLDAX-*6 (3)	250	Opp	121		7-A-062(P)	328481X	Furnished	442ZLDAX-*4 (3)	250	Opp	121		7-A-062		Furnished
442ZQDAX-*6 (3)	225	Opp	130		7-A-062(P)	328481X	Furnished	442ZQDAX-*4 (3)	225	Opp	130		7-A-062		Furnished
489ZFDAX-*6 (1)	250	Opp	94				Furnished	660ZFDAX-*4 (4)	375	Opp	94		7-A-062		Furnished
489ZHDAX-*6 (2)	250	Opp	109				Furnished	660ZQDAX-*4 (5)	375	Opp	130		7-A-062		Furnished
489ZLDAX-*6 (3)	250	Opp	121				Furnished								
489ZQDAX-*6 (3)	225	Opp	130				Furnished								
680ZFDAX-*6 (4)	375	Opp	94				Furnished								
680ZQDAX-*6 (5)	375	Opp	130				Furnished								
880XBDAX-*6 (6)	500	Opp	61				Furnished								
880XGDAX-*6 (7)	500	Opp	78				Furnished								
880XMDAX-*6 (8)	500	Opp	108				Furnished								
880XRDAX-*6 (9)	400	Opp	150				Furnished								
880XTDAX-*6 (10)	350	Opp	193				Furnished								
ONE SPEED - TWO GEAR - POWERSHIFT (AIR)															
230XADAX-*6 (11)	250	Opp	48			328481X	Furnished	230XADAX-*4 (11)	250	Opp	48				Furnished
230XBDAX-*6 (12)	250	Opp	62			328481X	Furnished	230XBDAX-*4 (12)	250	Opp	62				Furnished
230XDDAX-*6 (13)	250	Opp	72			328481X	Furnished	230XDDAX-*4 (13)	250	Opp	72				Furnished
230XKDAX-*6 (14)	250	Opp	97			328481X	Furnished	230XKDAX-*4 (14)	250	Opp	97				Furnished
230XQDAX-*6 (15)	250	Opp	129			328481X	Furnished	230XQDAX-*4 (15)	250	Opp	129				Furnished
236ZDDAX-*6 (3)	250	Opp	98		7-A-062(P)	328481X	Furnished	236ZDDAX-*4 (3)	250	Opp	98		7-A-062		Furnished
885XBDAX-*6 (6)	500	Opp	61				Furnished								
885XGDAX-*6 (7)	500	Opp	78				Furnished								
885XMDAX-*6 (8)	500	Opp	108				Furnished								
ONE SPEED - FORWARD & REVERSE															
340SFDAX-*4 (16)	200	Opp	85	90		328481X	Furnished	340SFDAX-*4 (16)	200	Opp	85	90			Furnished

Continued Next Page

Caution: Do not use geared adapters with 442 "A" and "C" ratios.

Caution: Do not install any P.T.O. models with a sliding input gear, the input gear does not shift completely out of mesh.

Caution: 660/680j Series: Applications above 1500 RPM, contact Chelsea Technical Service for approval.

Note: The 54 tooth gear in the transmission is located rearward of the verticle center line by .320.

Note: The 442/489 "R", "S","U","W", "X" ratios and 880 "R" and "T" ratiios cannot be mounted on this transmission because the OD of the ratiio gear will interfere with the OD of the 54 tooth P.T.O. drive gear in the transmission.

(1) Input Gear Part No. 5-P-1085
(2) Input Gear Part No. 5-P-1365
(3) Input Gear Part No. 5-P-1037
(4) Input Gear Part No. 5-P-1330
(5) Input Gear Part No. 5-P-1331
(6) Input Gear Part No. 5-P-1120
(7) Input Gear Part No. 5-P-1174
(8) Input Gear Part No. 5-P-1121
(9) Input Gear Part No. 5-P-1122
(10) Input Gear Part No. 5-P-1123
(11) Input Gear Part No. 5-P-1370
(12) Input Gear Part No. 5-P-1371
(13) Input Gear Part No. 5-P-1372
(14) Input Gear Part No. 5-P-843
(15) Input Gear Part No. 5-P-844
(16) Input Gear Part No. 5-P-634

January 2008

Parker Hannifin Corporation
Chelsea Products Division
Olive Branch, MS 38654 USA

TM308
TM309

LEFT SIDE ONLY	RIGHT SIDE ONLY
TRANSMISSION GEAR DATA: L.H. 8-Bolt Opening Gear REAR of Centerline 54 Teeth - SPUR **PITCH LINE TO APERTURE FACE:** 0.8100" (20.5700MM)	**TRANSMISSION GEAR DATA:** R.H. 6-Bolt Opening Gear REAR of Centerline 54 Teeth - SPUR **PITCH LINE TO APERTURE FACE:** 1.0850" (27.5590MM)

Caution: Application Approval Required for P.T.O. Output Shaft Speeds Above 2500 R.P.M.

LEFT Side P.T.O. Model	Inter. Torq.	Dir. Rot.	Engine % Hi	Engine % Rev	Filler Block	Adapter Assy.	Stud Kit	RIGHT Side P.T.O. Model	Inter. Torq.	Dir. Rot.	Engine % Hi	Engine % Rev	Filler Block	Adapter Assy.	Stud Kit
ONE SPEED - FORWARD & REVERSE															
863XBDAX-*4 (17)	500	Opp	61	75			Furnished								
GEARED ADAPTERS															
628ZDAX-6DA		Eng					Furnished	626ZDAX-4DA		Eng					Furnished
								630ZDAX-4DA		Eng					Furnished
								645ZDAX-4DA		Eng					Furnished

Caution: Do not use geared adapters with 442 "A" and "C" ratios.

Caution: Do not install any P.T.O. models with a sliding input gear, the input gear does not shift completely out of mesh.

Caution: 660/680j Series: Applications above 1500 RPM, contact Chelsea Technical Service for approval.

Note: The 54 tooth gear in the transmission is located rearward of the verticle center line by .320.

Note: The 442/489 "R", "S","U","W", "X" ratios and 880 "R" and "T" ratiios cannot be mounted on this transmission because the OD of the ratiio gear will interfere with the OD of the 54 tooth P.T.O. drive gear in the transmission.

(17) Input Gear Part No. 5-P-636

Parker Hannifin Corporation
Chelsea Products Division
Olive Branch, MS 38654 USA

MERCEDES

⚠ WARNING

FAILURE OR IMPROPER SELECTION OR IMPROPER USE OF THE PRODUCTS AND/OR SYSTEMS DESCRIBED HEREIN OR RELATED ITEMS CAN CAUSE DEATH, PERSONAL INJURY AND PROPERTY DAMAGE.

This document and other information from Parker Hannifin Corporation, its subsidiaries and authorized distributors provide product and/or system options for further investigation by users having technical expertise. It is important that you analyze all aspects of your application and review the information concerning the product or system in the current product catalog. Due to the variety of operating conditions and applications for these products or systems, the user, through its own analysis and testing, is solely responsible for making the final selection of the products and systems and assuring that all performance, safety and warning requirements of the application are met.

The products described herein, including without limitation, product features, specifications, designs, availability and pricing, are subject to change by Parker Hannifin Corporation and its subsidiaries at any time without notice.

Offer of Sale

The items described in this document are hereby offered for sale by Parker Hannifin Corporation, its subsidiaries or its authorized distributors. This offer and its acceptance are governed by the provisions stated in the "Offer of Sale".

© Copyright 2008, Parker Hannifin Corporation, All Rights Reserved

Parker Hannifin Corporation
Chelsea Products Division
Olive Branch, MS 38654 USA

Transmission Make and Model	P.T.O. Appl. Number	Number Forward Speeds	Teeth in P.T.O. Driver
G33	M/B-7	5	R43
G56 (See DDG-2 for Dodge/Sterling Trucks)	M/B-8	6	L52
G60	M/B-5	6	R45
G85	M/B-6	6	R53
MBT520-6DA (AGS - Automated Gear Shift)	M/B-5	6	R45
MBT520S-6D	M/B-5	6	R45
MBT660-6OA (AGS - Automated Gear Shift)	M/B-6	6	R53
MBT660S-6O	M/B-6	6	R53

IMPORTANT: See Safety Information in Section I of the Chelsea Applications catalog HY25-3000/US.

Transmission P.T.O. Driver & Aperatures (Viewed from Rear of Transmission)

L-Left Side R-Right Side B-Bottom Side T-Top Side

For transmission not listed, contact your authorized Chelsea Distributor.

January 2008

Parker Hannifin Corporation
Chelsea Products Division
Olive Branch, MS 38654 USA

G60
MBT520-6DA
MBT520S-6D

RIGHT SIDE ONLY

TRANSMISSION GEAR DATA:
R.H. 6-Bolt Opening Gear REAR of Centerline
45 Teeth - R.H. HELIX

PITCH LINE TO APERTURE FACE:
1.4240" (36.1696MM)

Caution: Application Approval Required for P.T.O. Output Shaft Speeds Above 2500 R.P.M.

P.T.O. Model	Inter. Torq.	Dir. Rot.	Engine % Hi	Engine % Rev	Filler Block	Adapter Assy.	Stud Kit	RIGHT Side P.T.O. Model	Inter. Torq.	Dir. Rot.	Engine % Hi	Engine % Rev	Filler Block	Adapter Assy.	Stud Kit
ONE SPEED - TWO GEAR - MECHANICAL SHIFT															
								442ZLJGX-*4 (1)	250	Opp	54				7170-72X
								442ZQJGX-*4 (1)	225	Opp	58				7170-72X
								442ZRJGX-*4 (1)	225	Opp	67				7170-72X
								442ZSJGX-*4 (1)	200	Opp	79				7170-72X
								442ZUJGX-*4 (1)	195	Opp	95				7170-72X
								442ZWJGX-*4 (1)	175	Opp	111				7170-72X
								442ZXJGX-*4 (1)	140	Opp	132				7170-72X
ONE SPEED - TWO GEAR - POWERSHIFT (AIR)															
								236ZDJGX-*4 (1)	250	Opp	44				7170-72X
								236ZKJGX-*4 (1)	250	Opp	56				7170-72X
								236ZQJGX-*4 (1)	250	Opp	75				7170-72X
								236ZUJGX-*4 (1)	225	Opp	86				7170-72X

NOTE: P.T.O. opening on the right side only.

(1) Input Gear Part No. 5-P-1256

G85
MBT660-6OA
MBT660S-6O

RIGHT SIDE ONLY

TRANSMISSION GEAR DATA:
R.H. 6-Bolt Opening Gear REAR of Centerline
53 Teeth - R.H. HELIX

PITCH LINE TO APERTURE FACE:
1.3380" (33.9852MM)

Caution: Application Approval Required for P.T.O. Output Shaft Speeds Above 2500 R.P.M.

P.T.O. Model	Inter. Torq.	Dir. Rot.	Engine % Hi	Engine % Rev	Filler Block	Adapter Assy.	Stud Kit	RIGHT Side P.T.O. Model	Inter. Torq.	Dir. Rot.	Engine % Hi	Engine % Rev	Filler Block	Adapter Assy.	Stud Kit
ONE SPEED - TWO GEAR - MECHANICAL SHIFT															
								442GLJHX-*4 (1)	250	Opp	84				Furnished
								442GQJHX-*4 (1)	225	Opp	90				Furnished
								442GRJHX-*4 (1)	225	Opp	104				Furnished
								442GSJHX-*4 (1)	200	Opp	124				Furnished
								442GUJHX-*4 (1)	195	Opp	148				Furnished
								442GWJHX-*4 (1)	175	Opp	174				Furnished
								442GXJHX-*4 (1)	140	Opp	206				Furnished
ONE SPEED - TWO GEAR - POWERSHIFT (AIR)															
								236GDJHX-*4 (1)	250	Opp	68				Furnished
								236GKJHX-*4 (1)	250	Opp	86				Furnished
								236GQJHX-*4 (1)	250	Opp	117				Furnished
								236GUJHX-*4 (1)	225	Opp	134				Furnished
ONE SPEED - FORWARD & REVERSE															
								352GSJHX-*4 (1)	140	Opp	126	163			Furnished
ONE SPEED - DUAL SHAFT															
								452GSJHX-*6 (1)	140	Opp	126				Furnished

NOTE: P.T.O. mount right side only

(1) Input Gear Part No. 5-P-1257

Parker Chelsea

Parker Hannifin Corporation
Chelsea Products Division
Olive Branch, MS 38654 USA

G33

RIGHT SIDE ONLY

TRANSMISSION GEAR DATA:
R.H. 6-Bolt Opening Gear FORWARD of Centerline
43 Teeth - R.H. HELIX

PITCH LINE TO APERTURE FACE:
0.9589" (24.3600MM)

Caution: Application Approval Required for P.T.O. Output Shaft Speeds Above 2500 R.P.M.

ONE SPEED - TWO GEAR - MECHANICAL SHIFT

P.T.O. Model	Inter. Torq.	Dir. Rot.	Engine % Hi	Engine % Rev	Filler Block	Adapter Assy.	Stud Kit	RIGHT Side P.T.O. Model	Inter. Torq.	Dir. Rot.	Engine % Hi	Engine % Rev	Filler Block	Adapter Assy.	Stud Kit
								442KLKCX-*3 (1)	250	Opp	56		7-A-165(T)		7170-79X
								442KQKCX-*3 (1)	225	Opp	60		7-A-165(T)		7170-79X
								442KRKCX-*3 (1)	225	Opp	69		7-A-165(T)		7170-79X
								442KSKCX-*3 (1)	200	Opp	83		7-A-165(T)		7170-79X
								442KUKCX-*3 (1)	195	Opp	98		7-A-165(T)		7170-79X
								442KWKCX-*3 (1)	175	Opp	116		7-A-165(T)		7170-79X
								442KXKCX-*3 (1)	140	Opp	137		7-A-165(T)		7170-79X

(1) Input Gear Part No. 5-P-1341

Parker Hannifin Corporation
Chelsea Products Division
Olive Branch, MS 38654 USA

G56

LEFT SIDE ONLY

TRANSMISSION GEAR DATA:

L.H. 6-Bolt Opening Gear REAR of Centerline

52 Teeth - R.H. HELIX

PITCH LINE TO APERTURE FACE:

Caution: Application Approval Required for P.T.O. Output Shaft Speeds Above 2500 R.P.M.

ONE SPEED - TWO GEAR - MECHANICAL SHIFT

LEFT Side P.T.O. Model	Inter. Torq.	Dir. Rot.	Engine % Hi	Engine % Rev	Filler Block	Adapter Assy.	Stud Kit	P.T.O. Model	Inter. Torq.	Dir. Rot.	Engine % Hi	Engine % Rev	Filler Block	Adapter Assy.	Stud Kit
442LLKHX-*6 (1)	250	Opp	67				7170-72X								
442LQKHX-*6 (1)	225	Opp	72				7170-72X								
442LRKHX-*6 (1)	225	Opp	84				7170-72X								
442LSKHX-*6 (1)	200	Opp	100				7170-72X								
442LUKHX-*6 (1)	195	Opp	119				7170-72X								
442LWKHX-*6 (1)	175	Opp	140				7170-72X								
442LXKHX-*6 (1)	140	Opp	165				7170-72X								

(1) Input Gear Part No. 5-P-1343

Parker Chelsea

Parker Hannifin Corporation
Chelsea Products Division
Olive Branch, MS 38654 USA

Notes


MERITOR

⚠ WARNING

FAILURE OR IMPROPER SELECTION OR IMPROPER USE OF THE PRODUCTS AND/OR SYSTEMS DESCRIBED HEREIN OR RELATED ITEMS CAN CAUSE DEATH, PERSONAL INJURY AND PROPERTY DAMAGE.

This document and other information from Parker Hannifin Corporation, its subsidiaries and authorized distributors provide product and/or system options for further investigation by users having technical expertise. It is important that you analyze all aspects of your application and review the information concerning the product or system in the current product catalog. Due to the variety of operating conditions and applications for these products or systems, the user, through its own analysis and testing, is solely responsible for making the final selection of the products and systems and assuring that all performance, safety and warning requirements of the application are met.

The products described herein, including without limitation, product features, specifications, designs, availability and pricing, are subject to change by Parker Hannifin Corporation and its subsidiaries at any time without notice.

Offer of Sale

The items described in this document are hereby offered for sale by Parker Hannifin Corporation, its subsidiaries or its authorized distributors. This offer and its acceptance are governed by the provisions stated in the "Offer of Sale".

© Copyright 2008, Parker Hannifin Corporation, All Rights Reserved

Parker Hannifin Corporation
Chelsea Products Division
Olive Branch, MS 38654 USA

Transmission Make and Model	P.T.O. Appl. Number	Number Forward Speeds	Teeth in P.T.O. Driver
M-11F10A-E11	RKW-1	10	B45-R45
M-11F10A-S11	RKW-1	10	B45-R45
M-11F9A-E11	RKW-1	9	B45-R45
M-11F9A-S11	RKW-1	9	B45-R45
M-11G10A-D11	RKW-1	10	B45-R45
M-11G10A-E11	RKW-1	10	B45-R45
M-11G10A-M11	RKW-1	10	B45-R45
M-11G10A-S11	RKW-1	10	B45-R45
M-11G9A-D11	RKW-1	9	B45-R45
M-11G9A-E11	RKW-1	9	B45-R45
M-11G9A-M11	RKW-1	9	B45-R45
M-11G9A-S11	RKW-1	9	B45-R45
M-12F10A-E12	RKW-1	10	B45-R45
M-12F10A-S12	RKW-1	10	B45-R45
M-12F9A-E12	RKW-1	9	B45-R45
M-12F9A-S12	RKW-1	9	B45-R45
M-12G10A-D12	RKW-1	10	B45-R45
M-12G10A-E12	RKW-1	10	B45-R45
M-12G10A-M12	RKW-1	10	B45-R45
M-12G10A-S12	RKW-1	10	B45-R45
M-12G9A-D12	RKW-1	9	B45-R45
M-12G9A-E12	RKW-1	9	B45-R45
M-12G9A-M12	RKW-1	9	B45-R45
M-12G9A-S12	RKW-1	9	B45-R45
M-13F10A-E13	RKW-1	10	B45-R45
M-13F10A-S13	RKW-1	10	B45-R45
M-13F9A-E13	RKW-1	9	B45-R45
M-13F9A-S13	RKW-1	9	B45-R45
M-13G10A-D13	RKW-1	10	B45-R45
M-13G10A-E13	RKW-1	10	B45-R45
M-13G10A-M13	RKW-1	10	B45-R45
M-13G10A-S13	RKW-1	10	B45-R45
M-13G9A-D13	RKW-1	9	B45-R45
M-13G9A-E13	RKW-1	9	B45-R45
M-13G9A-M13	RKW-1	9	B45-R45
M-13G9A-S13	RKW-1	9	B45-R45

IMPORTANT: See Safety Information in Section I of the Chelsea Applications catalog HY25-3000/US.

Transmission P.T.O. Driver & Aperatures (Viewed from Rear of Transmission)

L-Left Side R-Right Side B-Bottom Side T-Top Side

For transmission not listed, contact your authorized Chelsea Distributor.

January 2008

Parker Hannifin Corporation
Chelsea Products Division
Olive Branch, MS 38654 USA

MERITOR TRANSMISSION INDEX

Transmission Make and Model	P.T.O. Appl. Number	Number Forward Speeds	Teeth in P.T.O. Driver
M-13Z12A-A13 (Rear Mount PTO)	ZFM-5	12	R14
M-14F10A-E14	RKW-1	10	B45-R45
M-14F10A-M16	RKW-1	10	B45-R45
M-14F10A-S14	RKW-1	10	B45-R45
M-14F10A-S15	RKW-1	10	B45-R45
M-14F9A-E14	RKW-1	9	B45-R45
M-14F9A-S14	RKW-1	9	B45-R45
M-14G10A-D14	RKW-1	10	B45-R45
M-14G10A-E14	RKW-1	10	B45-R45
M-14G10A-E16	RKW-1	10	B45-R45
M-14G10A-M14	RKW-1	10	B45-R45
M-14G10A-M16	RKW-1	10	B45-R45
M-14G10A-S14	RKW-1	10	B45-R45
M-14G9A-D14	RKW-1	9	B45-R45
M-14G9A-E14	RKW-1	9	B45-R45
M-14G9A-M14	RKW-1	9	B45-R45
M-14G9A-S14	RKW-1	9	B45-R45
M-15F10A-E15	RKW-1	10	B45-R45
M-15F10A-S15	RKW-1	10	B45-R45
M-15G10A-D15	RKW-1	10	B45-R45
M-15G10A-E15	RKW-1	10	B45-R45
M-15G10A-M15	RKW-1	10	B45-R45
M-15G10A-S15	RKW-1	10	B45-R45
MO-11F10A-S11	RKW-2	10	B45-R45
MO-11F10C-E11	RKW-4	10	B45-R45
MO-11F10C-S11	RKW-4	10	B45-R45
MO-11F9B-E11	RKW-3	9	B45-R45
MO-11F9B-S11	RKW-3	9	B45-R45
MO-11G10A-D11	RKW-2	10	B45-R45
MO-11G10A-E11	RKW-2	10	B45-R45
MO-11G10A-M11	RKW-2	10	B45-R45
MO-11G10A-S11	RKW-2	10	B45-R45
MO-11G10C-D11	RKW-4	10	B45-R45
MO-11G10C-E11	RKW-4	10	B45-R45
MO-11G10C-M11	RKW-4	10	B45-R45
MO-11G10C-S11	RKW-4	10	B45-R45

IMPORTANT: See Safety Information in Section 1 of the Chelsea Applications catalog HY25-3000/US.

Transmission P.T.O. Driver & Aperatures (Viewed from Rear of Transmission)

L-Left Side R-Right Side B-Bottom Side T-Top Side

For transmission not listed, contact your authorized Chelsea Distributor.

January 2008

Parker Hannifin Corporation
Chelsea Products Division
Olive Branch, MS 38654 USA

Transmission Make and Model	P.T.O. Appl. Number	Number Forward Speeds	Teeth in P.T.O. Driver
MO-11G9B-D11	RKW-3	9	B45-R45
MO-11G9B-E11	RKW-3	9	B45-R45
MO-11G9B-M11	RKW-3	9	B45-R45
MO-11G9B-S11	RKW-3	9	B45-R45
MO-12F10A-E12	RKW-2	10	B45-R45
MO-12F10A-S12	RKW-2	10	B45-R45
MO-12F10C-E12	RKW-4	10	B45-R45
MO-12F10C-S12	RKW-4	10	B45-R45
MO-12F9A-E12	RKW-2	9	B45-R45
MO-12F9A-S12	RKW-2	9	B45-R45
MO-12F9B-E12	RKW-3	9	B45-R45
MO-12F9B-S12	RKW-3	9	B45-R45
MO-12G10A-D12	RKW-2	10	B45-R45
MO-12G10A-E12	RKW-2	10	B45-R45
MO-12G10A-M12	RKW-2	10	B45-R45
MO-12G10A-S12	RKW-2	10	B45-R45
MO-12G10C-D12	RKW-4	10	B45-R45
MO-12G10C-E12	RKW-4	10	B45-R45
MO-12G10C-M12	RKW-4	10	B45-R45
MO-12G10C-S12	RKW-4	10	B45-R45
MO-12G9A-D12	RKW-2	9	B45-R45
MO-12G9A-E12	RKW-2	9	B45-R45
MO-12G9A-M12	RKW-2	9	B45-R45
MO-12G9A-S12	RKW-2	9	B45-R45
MO-12G9B-D12	RKW-3	9	B45-R45
MO-12G9B-E12	RKW-3	9	B45-R45
MO-12G9B-M12	RKW-3	9	B45-R45
MO-12G9B-S12	RKW-3	9	B45-R45
MO-13F10A-E13	RKW-2	10	B45-R45
MO-13F10A-S13	RKW-2	10	B45-R45
MO-13F10C-E13	RKW-4	10	B45-R45
MO-13F10C-S13	RKW-4	10	B45-R45
MO-13F9A-E13	RKW-2	9	B45-R45
MO-13F9A-S13	RKW-2	9	B45-R45
MO-13F9B-E13	RKW-3	9	B45-R45
MO-13F9B-S13	RKW-3	9	B45-R45

IMPORTANT: See Safety Information in Section I of the Chelsea Applications catalog HY25-3000/US.

Transmission P.T.O. Driver & Aperatures (Viewed from Rear of Transmission)

L-Left Side R-Right Side B-Bottom Side T-Top Side

For transmission not listed, contact your authorized Chelsea Distributor.

January 2008

Parker Hannifin Corporation
Chelsea Products Division
Olive Branch, MS 38654 USA

MERITOR TRANSMISSION INDEX

Transmission Make and Model	P.T.O. Appl. Number	Number Forward Speeds	Teeth in P.T.O. Driver
MO-13G10A-D13	RKW-2	10	B45-R45
MO-13G10A-E13	RKW-2	10	B45-R45
MO-13G10A-M13	RKW-2	10	B45-R45
MO-13G10A-S13	RKW-2	10	B45-R45
MO-13G10C-D13	RKW-4	10	B45-R45
MO-13G10C-E13	RKW-4	10	B45-R45
MO-13G10C-M13	RKW-4	10	B45-R45
MO-13G10C-S13	RKW-4	10	B45-R45
MO-13G9A-D13	RKW-2	9	B45-R45
MO-13G9A-E13	RKW-2	9	B45-R45
MO-13G9A-M13	RKW-2	9	B45-R45
MO-13G9A-S13	RKW-2	9	B45-R45
MO-13G9B-D13	RKW-3	9	B45-R45
MO-13G9B-E13	RKW-3	9	B45-R45
MO-13G9B-M13	RKW-3	9	B45-R45
MO-13G9B-S13	RKW-3	9	B45-R45
MO-14F10A-E14	RKW-2	10	B45-R45
MO-14F10A-E16	RKW-2	10	B45-R45
MO-14F10A-M16	RKW-2	10	B45-R45
MO-14F10A-S14	RKW-2	10	B45-R45
MO-14F10A-S16	RKW-2	10	B45-R45
MO-14F10C-E14	RKW-4	10	B45-R45
MO-14F10C-E16	RKW-4	10	B45-R45
MO-14F10C-M16	RKW-4	10	B45-R45
MO-14F10C-S14	RKW-4	10	B45-R45
MO-14F10C-S16	RKW-4	10	B45-R45
MO-14F9A-E14	RKW-2	9	B45-R45
MO-14F9A-S14	RKW-2	9	B45-R45
MO-14F9B-E14	RKW-3	9	B45-R45
MO-14F9B-S14	RKW-3	9	B45-R45
MO-14G10A-D14	RKW-2	10	B45-R45
MO-14G10A-E14	RKW-2	10	B45-R45
MO-14G10A-E16	RKW-2	10	B45-R45
MO-14G10A-M14	RKW-2	10	B45-R45
MO-14G10A-M16	RKW-2	10	B45-R45
MO-14G10A-S14	RKW-2	10	B45-R45

IMPORTANT: See Safety Information in Section 1 of the Chelsea Applications catalog HY25-3000/US.

Transmission P.T.O. Driver & Aperatures (Viewed from Rear of Transmission)

L-Left Side R-Right Side B-Bottom Side T-Top Side

For transmission not listed, contact your authorized Chelsea Distributor.

January 2008

Parker Hannifin Corporation
Chelsea Products Division
Olive Branch, MS 38654 USA

Transmission Make and Model	P.T.O. Appl. Number	Number Forward Speeds	Teeth in P.T.O. Driver
MO-14G10A-S16	RKW-2	10	B45-R45
MO-14G10C-D14	RKW-4	10	B45-R45
MO-14G10C-E14	RKW-4	10	B45-R45
MO-14G10C-E16	RKW-4	10	B45-R45
MO-14G10C-M14	RKW-4	10	B45-R45
MO-14G10C-M16	RKW-4	10	B45-R45
MO-14G10C-S14	RKW-4	10	B45-R45
MO-14G10C-S16	RKW-4	10	B45-R45
MO-14G9A-D14	RKW-2	9	B45-R45
MO-14G9A-E14	RKW-2	9	B45-R45
MO-14G9A-M14	RKW-2	9	B45-R45
MO-14G9A-S14	RKW-2	9	B45-R45
MO-14G9B-D14	RKW-3	9	B45-R45
MO-14G9B-E14	RKW-3	9	B45-R45
MO-14G9B-M14	RKW-3	9	B45-R45
MO-14G9B-S14	RKW-3	9	B45-R45
MO-14Z12A-A14 (Rear Mount PTO)	ZFM-6	12	R14
MO-15F10A-E15	RKW-2	10	B45-R45
MO-15F10A-S15	RKW-2	10	B45-R45
MO-15F10C-E15	RKW-4	10	B45-R45
MO-15F10C-S15	RKW-4	10	B45-R45
MO-15F9B-E15	RKW-3	9	B45-R45
MO-15F9B-S15	RKW-3	9	B45-R45
MO-15G10A-D15	RKW-2	10	B45-R45
MO-15G10A-E15	RKW-2	10	B45-R45
MO-15G10A-M15	RKW-2	10	B45-R45
MO-15G10A-S15	RKW-2	10	B45-R45
MO-15G10C-D15	RKW-4	10	B45-R45
MO-15G10C-E15	RKW-4	10	B45-R45
MO-15G10C-M15	RKW-4	10	B45-R45
MO-15G10C-S15	RKW-4	10	B45-R45
MO-15G9B-D15	RKW-3	9	B45-R45
MO-15G9B-E15	RKW-3	9	B45-R45
MO-15G9B-M15	RKW-3	9	B45-R45
MO-15G9B-S15	RKW-3	9	B45-R45
MO-15Z16A-A15 (Rear Mount PTO)	ZFM-7	12	R14

IMPORTANT: See Safety Information in Section I of the Chelsea Applications catalog HY25-3000/US.

Transmission P.T.O. Driver & Aperatures (Viewed from Rear of Transmission)

L-Left Side R-Right Side B-Bottom Side T-Top Side

For transmission not listed, contact your authorized Chelsea Distributor.

January 2008

Parker Hannifin Corporation
Chelsea Products Division
Olive Branch, MS 38654 USA

MERITOR TRANSMISSION INDEX

Transmission Make and Model	P.T.O. Appl. Number	Number Forward Speeds	Teeth in P.T.O. Driver
MO-16F10A-E16	RKW-2	10	B45-R45
MO-16F10A-S16	RKW-2	10	B45-R45
MO-16F10C-E16	RKW-4	10	B45-R45
MO-16F10C-E18	RKW-4	10	B45-R45
MO-16F10C-M18	RKW-4	10	B45-R45
MO-16F10C-S16	RKW-4	10	B45-R45
MO-16F10C-S18	RKW-4	10	B45-R45
MO-16G10A-D16	RKW-2	10	B45-R45
MO-16G10A-E16	RKW-2	10	B45-R45
MO-16G10A-M16	RKW-2	10	B45-R45
MO-16G10A-S16	RKW-2	10	B45-R45
MO-16G10C-D16	RKW-4	10	B45-R45
MO-16G10C-E16	RKW-4	10	B45-R45
MO-16G10C-E18	RKW-4	10	B45-R45
MO-16G10C-M16	RKW-4	10	B45-R45
MO-16G10C-M18	RKW-4	10	B45-R45
MO-16G10C-S16	RKW-4	10	B45-R45
MO-16G10C-S18	RKW-4	10	B45-R45
RD10-145A	RKW-1	10	B45-R45
RE10-115A	RKW-1	10	B45-R45
RE10-125A	RKW-1	10	B45-R45
RE10-135A	RKW-1	10	B45-R45
RE10-145A	RKW-1	10	B45-R45
RE10-155A	RKW-1	10	B45-R45
RE9-115A	RKW-1	9	B45-R45
RE9-125A	RKW-1	9	B45-R45
RE9-135A	RKW-1	9	B45-R45
RE9-145A	RKW-1	9	B45-R45
RE9-155A	RKW-1	9	B45-R45
REO9-115B	RKW-3	9	B45-R45
REO9-125A	RKW-2	9	B45-R45
REO9-125B	RKW-3	9	B45-R45
REO9-135A	RKW-2	9	B45-R45
REO9-135B	RKW-3	9	B45-R45
REO9-145A	RKW-2	9	B45-R45
REO9-145B	RKW-3	9	B45-R45

IMPORTANT: See Safety Information in Section 1 of the Chelsea Applications catalog HY25-3000/US.

Transmission P.T.O. Driver & Aperatures (Viewed from Rear of Transmission)

L-Left Side R-Right Side B-Bottom Side T-Top Side

For transmission not listed, contact your authorized Chelsea Distributor.

January 2008

Parker Hannifin Corporation
Chelsea Products Division
Olive Branch, MS 38654 USA

Transmission Make and Model	P.T.O. Appl. Number	Number Forward Speeds	Teeth in P.T.O. Driver
REO9-155B	RKW-3	9	B45-R45
REX10-115A	RKW-2	10	B45-R45
REX10-115C	RKW-4	10	B45-R45
REX10-125A	RKW-2	10	B45-R45
REX10-125C	RKW-4	10	B45-R45
REX10-135A	RKW-2	10	B45-R45
REX10-135C	RKW-4	10	B45-R45
REX10-145A	RKW-2	10	B45-R45
REX10-145C	RKW-4	10	B45-R45
REX10-155A	RKW-2	10	B45-R45
REX10-155C	RKW-4	10	B45-R45
REX10-165A	RKW-2	10	B45-R45
REX10-165C	RKW-4	10	B45-R45
REX9-115B	RKW-3	9	B45-R45
REX9-115R	RKW-3	9	B45-R45
REX9-125A	RKW-2	9	B45-R45
REX9-125B	RKW-3	9	B45-R45
REX9-125R	RKW-3	9	B45-R45
REX9-135A	RKW-2	9	B45-R45
REX9-135B	RKW-3	9	B45-R45
REX9-135R	RKW-3	9	B45-R45
REX9-145A	RKW-2	9	B45-R45
REX9-145B	RKW-3	9	B45-R45
REX9-145R	RKW-3	9	B45-R45
REX9-155B	RKW-3	9	B45-R45
RM10-115A	RKW-1	10	B45-R45
RM10-125A	RKW-1	10	B45-R45
RM10-135A	RKW-1	10	B45-R45
RM10-145A	RKW-1	10	B45-R45
RM10-155A	RKW-1	10	B45-R45
RM9-115A	RKW-1	9	B45-R45
RM9-125A	RKW-1	9	B45-R45
RM9-135A	RKW-1	9	B45-R45
RM9-145A	RKW-1	9	B45-R45
RM9-155A	RKW-1	9	B45-R45
RMO13-145A	RKW-1	13	B45-R45

IMPORTANT: See Safety Information in Section I of the Chelsea Applications catalog HY25-3000/US.

Transmission P.T.O. Driver & Aperatures (Viewed from Rear of Transmission)

L-Left Side R-Right Side B-Bottom Side T-Top Side

For transmission not listed, contact your authorized Chelsea Distributor.

January 2008

Parker Hannifin Corporation
Chelsea Products Division
Olive Branch, MS 38654 USA

MERITOR TRANSMISSION INDEX

Transmission Make and Model	P.T.O. Appl. Number	Number Forward Speeds	Teeth in P.T.O. Driver
RMO9-115A	RKW-2	9	B45-R45
RMO9-115B	RKW-3	9	B45-R45
RMO9-125A	RKW-2	9	B45-R45
RMO9-125B	RKW-3	9	B45-R45
RMO9-135A	RKW-2	9	B45-R45
RMO9-135B	RKW-3	9	B45-R45
RMO9-145A	RKW-2	9	B45-R45
RMO9-145B	RKW-3	9	B45-R45
RMO9-155B	RKW-3	9	B45-R45
RMX10-115A	RKW-2	10	B45-R45
RMX10-115C	RKW-4	10	B45-R45
RMX10-125A	RKW-2	10	B45-R45
RMX10-125C	RKW-4	10	B45-R45
RMX10-135A	RKW-2	10	B45-R45
RMX10-135C	RKW-4	10	B45-R45
RMX10-145A	RKW-2	10	B45-R45
RMX10-145C	RKW-4	10	B45-R45
RMX10-155A	RKW-2	10	B45-R45
RMX10-155C	RKW-4	10	B45-R45
RMX10-165A	RKW-2	10	B45-R45
RMX10-165C	RKW-4	10	B45-R45
RMX9-115B	RKW-3	9	B45-R45
RMX9-115R	RKW-2	9	B45-R45
RMX9-125A	RKW-2	9	B45-R45
RMX9-125B	RKW-3	9	B45-R45
RMX9-125R	RKW-2	9	B45-R45
RMX9-135A	RKW-2	9	B45-R45
RMX9-135B	RKW-3	9	B45-R45
RMX9-135R	RKW-2	9	B45-R45
RMX9-145A	RKW-2	9	B45-R45
RMX9-145B	RKW-3	9	B45-R45
RMX9-145R	RKW-2	9	B45-R45
RMX9-155B	RKW-3	9	B45-R45
RS10-115A	RKW-1	10	B45-R45
RS10-125A	RKW-1	10	B45-R45
RS10-135A	RKW-1	10	B45-R45

IMPORTANT: See Safety Information in Section 1 of the Chelsea Applications catalog HY25-3000/US.

Transmission P.T.O. Driver & Aperatures (Viewed from Rear of Transmission)

L-Left Side R-Right Side B-Bottom Side T-Top Side

For transmission not listed, contact your authorized Chelsea Distributor.

January 2008

Parker Hannifin Corporation
Chelsea Products Division
Olive Branch, MS 38654 USA

Transmission Make and Model	P.T.O. Appl. Number	Number Forward Speeds	Teeth in P.T.O. Driver
RS10-145A	RKW-1	10	B45-R45
RS10-155A	RKW-1	10	B45-R45
RS9-115A	RKW-1	9	B45-R45
RS9-125A	RKW-1	9	B45-R45
RS9-135A	RKW-1	9	B45-R45
RS9-145A	RKW-1	9	B45-R45
RS9-155A	RKW-1	9	B45-R45
RSO9-115B	RKW-3	9	B45-R45
RSO9-125B	RKW-3	9	B45-R45
RSO9-135B	RKW-3	9	B45-R45
RSO9-145B	RKW-3	9	B45-R45
RSO9-155B	RKW-3	9	B45-R45
RSX10-115A	RKW-2	10	B45-R45
RSX10-115C	RKW-4	10	B45-R45
RSX10-125A	RKW-2	10	B45-R45
RSX10-125C	RKW-4	10	B45-R45
RSX10-135A	RKW-2	10	B45-R45
RSX10-135C	RKW-4	10	B45-R45
RSX10-145A	RKW-2	10	B45-R45
RSX10-145C	RKW-4	10	B45-R45
RSX10-155A	RKW-2	10	B45-R45
RSX10-155C	RKW-4	10	B45-R45
RSX10-165A	RKW-2	10	B45-R45
RSX10-165C	RKW-4	10	B45-R45
RSX9-115B	RKW-3	9	B45-R45
RSX9-115C	RKW-3	9	B45-R45
RSX9-115R	RKW-3	9	B45-R45
RSX9-125A	RKW-2	9	B45-R45
RSX9-125B	RKW-3	9	B45-R45
RSX9-125C	RKW-3	9	B45-R45
RSX9-125R	RKW-2	9	B45-R45
RSX9-135A	RKW-2	9	B45-R45
RSX9-135B	RKW-3	9	B45-R45
RSX9-135C	RKW-3	9	B45-R45
RSX9-135R	RKW-2	9	B45-R45
RSX9-145A	RKW-2	9	B45-R45

IMPORTANT: See Safety Information in Section I of the Chelsea Applications catalog HY25-3000/US.

Transmission P.T.O. Driver & Aperatures (Viewed from Rear of Transmission)

L-Left Side R-Right Side B-Bottom Side T-Top Side

For transmission not listed, contact your authorized Chelsea Distributor.

January 2008

Parker Hannifin Corporation
Chelsea Products Division
Olive Branch, MS 38654 USA

MERITOR TRANSMISSION INDEX

Transmission Make and Model	P.T.O. Appl. Number	Number Forward Speeds	Teeth in P.T.O. Driver
RSX9-145B	RKW-3	9	B45-R45
RSX9-145C	RKW-3	9	B45-R45
RSX9-145R	RKW-2	9	B45-R45
RSX9-155B	RKW-3	9	B45-R45
RSX9-155C	RKW-3	9	B45-R45

M-11F10A-E11	M-11G10A-E11	M-11G9A-M11	M-12F9A-S12	M-12G9A-D12	M-13F10A-S13	M-13G10A-M13	M-13G9A-S13
M-11F10A-S11	M-11G10A-M11	M-11G9A-S11	M-12G10A-D12	M-12G9A-E12	M-13F9A-E13	M-13G10A-S13	M-14F10A-E14
M-11F9A-E11	M-11G10A-S11	M-12F10A-E12	M-12G10A-E12	M-12G9A-M12	M-13F9A-S13	M-13G9A-D13	M-14F10A-M16
M-11F9A-S11	M-11G9A-D11	M-12F10A-S12	M-12G10A-M12	M-12G9A-S12	M-13G10A-D13	M-13G9A-E13	M-14F10A-S14
M-11G10A-D11	M-11G9A-E11	M-12F9A-E12	M-12G10A-S12	M-13F10A-E13	M-13G10A-E13	M-13G9A-M13	M-14F10A-S15

BOTTOM SIDE ONLY

TRANSMISSION GEAR DATA:

BOT 8-Bolt Opening Gear FORWARD of Centerline

45 Teeth - SPUR

PITCH LINE TO APERTURE FACE:

.8100" (20.5740MM)

RIGHT SIDE ONLY

TRANSMISSION GEAR DATA:

R.H. 6-Bolt Opening Gear FORWARD of Centerline

45 Teeth - SPUR

PITCH LINE TO APERTURE FACE:

1.0850" (27.5600MM)

Caution: Application Approval Required for P.T.O. Output Shaft Speeds Above 2500 R.P.M.

BOTTOM Side P.T.O. Model	Inter. Torq.	Dir. Rot.	Engine % Hi	Engine % Rev	Filler Block	Adapter Assy.	Stud Kit	RIGHT Side P.T.O. Model	Inter. Torq.	Dir. Rot.	Engine % Hi	Engine % Rev	Filler Block	Adapter Assy.	Stud Kit
ONE SPEED - SINGLE GEAR - MECHANICAL SHIFT															
100XRAHX-*3 (1)	125	Eng	142		7-A-032(P)	328481X	Furnished	100XRAHX-*3 (1)	125	Eng	142				Furnished
812XKAHX-*3	400	Eng	95				Furnished								
ONE SPEED - TWO GEAR - MECHANICAL SHIFT															
221ZCAHX-*3	250	Opp	63		7-A-032(P)(2)	328564X	Furnished	221XCAHX-*3	250	Opp	63		7-A-032 (2)		Furnished
221ZEAHX-*3	250	Opp	73			328564X	Furnished	221XEAHX-*3	250	Opp	73				Furnished
221ZLAHX-*3	200	Opp	98			328564X	Furnished	221XLAHX-*3	200	Opp	98				Furnished
221ZPAHX-*3	200	Opp	119			328564X	Furnished	221XPAHX-*3	200	Opp	118				Furnished
442ZAAHX-*3 (4)	250	Opp	56			328564X	Furnished	442XBAHX-*3 (3)	250	Eng	56			REQUIRED	Furnished
442ZCAHX-*3 (5)	250	Opp	71			328564X	Furnished	442XAAHX-*3 (4)	250	Opp	56				Furnished
442ZFAHX-*3 (6)	250	Opp	88			328564X	Furnished	442XCAHX-*3 (5)	250	Opp	71				Furnished
442ZHAHX-*3 (7)	250	Opp	102			328564X	Furnished	442XFAHX-*3 (6)	250	Opp	88				Furnished
442ZLAHX-*3 (8)	250	Opp	114			328564X	Furnished	442XHAHX-*3 (7)	250	Opp	102				Furnished
442ZQAHX-*3 (8)	225	Opp	123			328564X	Furnished	442XLAHX-*3 (8)	250	Opp	114				Furnished
442ZRAHX-*3 (8)	225	Opp	142			328564X	Furnished	442XQAHX-*3 (8)	225	Opp	123				Furnished
442ZSAHX-*3 (8)	200	Opp	169			328564X	Furnished	442XRAHX-*3 (8)	225	Opp	142				Furnished
442ZUAHX-*3 (8)	195	Opp	202			328564X	Furnished	442XSAHX-*3 (8)	200	Opp	169				Furnished
442ZWAHX-*3 (8)	175	Opp	237			328564X	Furnished	442XUAHX-*3 (8)	195	Opp	201				Furnished
442ZXAHX-*3 (8)	140	Opp	281			328564X	Furnished	442XWAHX-*3 (8)	175	Opp	237				Furnished
489XAAHX-*3 (4)	250	Opp	56				Furnished	442XXAHX-*3 (8)	140	Opp	280				Furnished
489XCAHX-*3 (5)	250	Opp	71				Furnished	660XFAHX-*3 (9)	375	Opp	88				Furnished
489XFAHX-*3 (6)	250	Opp	88				Furnished	660XQAHX-*3 (10)	375	Opp	123				Furnished
489XHAHX-*3 (7)	250	Opp	102				Furnished	660XSAHX-*3 (11)	325	Opp	169				Furnished
489XLAHX-*3 (8)	250	Opp	114				Furnished								
489XQAHX-*3 (8)	225	Opp	123				Furnished								
489XRAHX-*3 (8)	225	Opp	142				Furnished								
489XSAHX-*3 (8)	200	Opp	169				Furnished								
489XUAHX-*3 (8)	195	Opp	202				Furnished								
489XWAHX-*3 (8)	175	Opp	237				Furnished								
489XXAHX-*3 (8)	140	Opp	281				Furnished								

Continued Next Page

CAUTION: 660/680 Series: Applications above 1500 RPM output shaft speed, contact Chelsea Technical Service for approval.

NOTE: The AK & XK output flanges can not be used with the "A" & "C" ratios on the 489 Series P.T.O.s due to mounting stud interference. Use a RA or RB rotatable flange for the XK and the RA for the AK flange.

NOTE: The 100 Series Output Shaft will Interfer with the Bulge on the Right Side of the Transmission. Use the Adapter shown (626XAHX-3XX) to space the 100 Series out from the Transmission to Clear the Bulge.

NOTE: Two Gear P.T.O.s with Direct Mount Pumps may Not Clear the Transmission Bulge on the Right Side. Check for Clearance Before Mounting the P.T.O. and Pump.

NOTE: If Ordering the 230/231 Series with the Shaft Brake Option, order the "BA" Output for Automatic Transmissions and the "BD" Output for Manual Transmissions.

NOTE: The 422XBAH must use one of the Geared Adapters Listed on the Application Page. Direction of Rotation Shown is the Final Output Shaft Rotation w/ Geared Adapter.

(1) Gear and Shaft Kit No. KXA-2-P-565
(2) Filler block furnished with P.T.O.
(3) Input Gear Part No. 5-P-1418
(4) Input Gear Part No. 5-P-1280
(5) Input Gear Part No. 5-P-1287
(6) Input Gear Part No. 5-P-1077
(7) Input Gear Part No. 5-P-1364
(8) Input Gear Part No. 5-P-1004
(9) Input Gear Part No. 5-P-1242
(10) Input Gear Part No. 5-P-1246
(11) Input Gear Part No. 5-P-1322

January 2008

Parker Hannifin Corporation
Chelsea Products Division
Olive Branch, MS 38654 USA

M-11F10A-E11	M-11G10A-E11	M-11G9A-M11	M-12F9A-S12	M-12G9A-D12	M-13F10A-S13	M-13G10A-M13	M-13G9A-S13
M-11F10A-S11	M-11G10A-M11	M-11G9A-S11	M-12G10A-D12	M-12G9A-E12	M-13F9A-E13	M-13G10A-S13	M-14F10A-E14
M-11F9A-E11	M-11G10A-S11	M-12F10A-E12	M-12G10A-E12	M-12G9A-M12	M-13F9A-S13	M-13G9A-D13	M-14F10A-M16
M-11F9A-S11	M-11G9A-D11	M-12F10A-S12	M-12G10A-M12	M-12G9A-S12	M-13G10A-D13	M-13G9A-E13	M-14F10A-S14
M-11G10A-D11	M-11G9A-E11	M-12F9A-E12	M-12G10A-S12	M-13F10A-E13	M-13G10A-E13	M-13G9A-M13	M-14F10A-S15

BOTTOM SIDE ONLY

TRANSMISSION GEAR DATA:
BOT 8-Bolt Opening Gear FORWARD of Centerline
45 Teeth - SPUR
PITCH LINE TO APERTURE FACE:
.8100" (20.5740MM)

RIGHT SIDE ONLY

TRANSMISSION GEAR DATA:
R.H. 6-Bolt Opening Gear FORWARD of Centerline
45 Teeth - SPUR
PITCH LINE TO APERTURE FACE:
1.0850" (27.5600MM)

Caution: Application Approval Required for P.T.O. Output Shaft Speeds Above 2500 R.P.M.

BOTTOM Side P.T.O. Model	Inter. Torq.	Dir. Rot.	Engine % Hi	Engine % Rev	Filler Block	Adapter Assy.	Stud Kit	RIGHT Side P.T.O. Model	Inter. Torq.	Dir. Rot.	Engine % Hi	Engine % Rev	Filler Block	Adapter Assy.	Stud Kit
ONE SPEED - TWO GEAR - MECHANICAL SHIFT															
680XFAHX-*3 (9)	375	Opp	88				Furnished								
680XQAHX-*3 (10)	375	Opp	123				Furnished								
680XSAHX-*3 (11)	325	Opp	169				Furnished								
823XBAHX-*3 (12)	500	Opp	60				Furnished								
823XJAHX-*3 (13)	500	Opp	91				Furnished								
823XMAHX-*3 (14)	500	Opp	107				Furnished								
823XRAHX-*3 (15)	400	Opp	147				Furnished								
823XTKTX-*3 (16)	350	Opp	177		8-A-165 (2)		Furnished								
880XBAHX-*3 (17)	500	Opp	60				Furnished								
880XDAHX-*3 (18)	500	Opp	71				Furnished								
880XGAHX-*3 (19)	500	Opp	77				Furnished								
880XJAHX-*3 (20)	500	Opp	91				Furnished								
880XMAHX-*3 (21)	500	Opp	107				Furnished								
880XQAHX-*3 (22)	450	Opp	125				Furnished								
880XRAHX-*3 (23)	400	Opp	147				Furnished								
880XTAHX-*3 (24)	350	Opp	189				Furnished								
ONE SPEED - TWO GEAR - POWERSHIFT (AIR)															
230XAAJX-*3	250	Opp	46			328481X	Furnished	230XAAJX-*3	250	Opp	46				Furnished
230XBAJX-*3	250	Opp	60			328481X	Furnished	230XBAJX-*3	250	Opp	60				Furnished
230XDAJX-*3	250	Opp	70			328481X	Furnished	230XDAJX-*3	250	Opp	70				Furnished
230XKAJX-*3	250	Opp	94			328481X	Furnished	230XKAJX-*3	250	Opp	94				Furnished
230XQAJX-*3	250	Opp	125			328481X	Furnished	230XQAJX-*3	250	Opp	125				Furnished
230XUAJX-*3	225	Opp	201			328481X	Furnished	230XUAJX-*3	225	Opp	200				Furnished
236ZDAHX-*3 (8)	250	Opp	92			328564X	Furnished	236XDAHX-*3 (8)	250	Opp	92				Furnished
236ZKAHX-*3 (8)	250	Opp	118			328564X	Furnished	236XKAHX-*3 (8)	250	Opp	118				Furnished
236ZQAHX-*3 (8)	250	Opp	159			328564X	Furnished	236XQAHX-*3 (8)	250	Opp	159				Furnished
236ZUAHX-*3 (8)	225	Opp	183			328564X	Furnished	236XUAHX-*3 (8)	225	Opp	182				Furnished
885XBAHX-*3 (17)	500	Opp	60				Furnished								
885XGAHX-*3 (19)	500	Opp	77				Furnished								

Continued Next Page

CAUTION: 660/680 Series: Applications above 1500 RPM output shaft speed, contact Chelsea Technical Service for approval.

NOTE: The AK & XK output flanges can not be used with the "A" & "C" ratios on the 489 Series P.T.O.s due to mounting stud interference. Use a RA or RB rotatable flange for the XK and the RA for the AK flange.

NOTE: The 100 Series Output Shaft will Interfer with the Bulge on the Right Side of the Transmission. Use the Adapter shown (626XAHX-3XX) to space the 100 Series out from the Transmission to Clear the Bulge.

NOTE: Two Gear P.T.O.s with Direct Mount Pumps may Not Clear the Transmission Bulge on the Right Side. Check for Clearance Before Mounting the P.T.O. and Pump.

NOTE: If Ordering the 230/231 Series with the Shaft Brake Option, order the "BA" Output for Automatic Transmissions and the "BD" Output for Manual Transmissions.

NOTE: The 422XBAH must use one of the Geared Adapters Listed on the Application Page. Direction of Rotation Shown is the Final Output Shaft Rotation w/ Geared Adapter.

(2) Filler block furnished with P.T.O.
(8) Input Gear Part No. 5-P-1004
(9) Input Gear Part No. 5-P-1242
(10) Input Gear Part No. 5-P-1246
(11) Input Gear Part No. 5-P-1322
(12) Input Gear Part No. 5-P-285
(13) Input Gear Part No. 5-P-325
(14) Input Gear Part No. 5-P-283
(15) Input Gear Part No. 5-P-721
(16) Input Gear Part No. 5-P-1395
(17) Input Gear Part No. 5-P-1100
(18) Input Gear Part No. 5-P-1101
(19) Input Gear Part No. 5-P-1135
(20) Input Gear Part No. 5-P-1102
(21) Input Gear Part No. 5-P-1103
(22) Input Gear Part No. 5-P-1385
(23) Input Gear Part No. 5-P-1104
(24) Input Gear Part No. 5-P-1105

Parker Hannifin Corporation
Chelsea Products Division
Olive Branch, MS 38654 USA

M-11F10A-E11	M-11G10A-E11	M-11G9A-M11	M-12F9A-S12	M-12G9A-D12	M-13F10A-S13	M-13G10A-M13	M-13G9A-S13
M-11F10A-S11	M-11G10A-M11	M-11G9A-S11	M-12G10A-D12	M-12G9A-E12	M-13F9A-E13	M-13G10A-S13	M-14F10A-E14
M-11F9A-E11	M-11G10A-S11	M-12F10A-E12	M-12G10A-E12	M-12G9A-M12	M-13F9A-S13	M-13G9A-D13	M-14F10A-M16
M-11F9A-S11	M-11G9A-D11	M-12F10A-S12	M-12G10A-M12	M-12G9A-S12	M-13G10A-D13	M-13G9A-E13	M-14F10A-S14
M-11G10A-D11	M-11G9A-E11	M-12F9A-E12	M-12G10A-S12	M-13F10A-E13	M-13G10A-E13	M-13G9A-M13	M-14F10A-S15

BOTTOM SIDE ONLY

TRANSMISSION GEAR DATA:

BOT 8-Bolt Opening Gear FORWARD of Centerline

45 Teeth - SPUR

PITCH LINE TO APERTURE FACE:

.8100" (20.5740MM)

RIGHT SIDE ONLY

TRANSMISSION GEAR DATA:

R.H. 6-Bolt Opening Gear FORWARD of Centerline

45 Teeth - SPUR

PITCH LINE TO APERTURE FACE:

1.0850" (27.5600MM)

Caution: Application Approval Required for P.T.O. Output Shaft Speeds Above 2500 R.P.M.

BOTTOM Side P.T.O. Model	Inter. Torq.	Dir. Rot.	Engine % Hi	Engine % Rev	Filler Block	Adapter Assy.	Stud Kit	RIGHT Side P.T.O. Model	Inter. Torq.	Dir. Rot.	Engine % Hi	Engine % Rev	Filler Block	Adapter Assy.	Stud Kit
ONE SPEED - TWO GEAR - POWERSHIFT (AIR)															
885XJAHX-*3 (20)	500	Opp	91				Furnished								
885XMAHX-*3 (21)	500	Opp	107				Furnished								
ONE SPEED - FORWARD & REVERSE															
340XFAHX-*5 (25)	200	Opp	77	81	7-A-140(P)(2) 7-A-032(P)	328481X	Furnished	340XFAHX-*5 (25)	200	Opp	77	81	7-A-140 (2)		Furnished
352ZSAHX-*3 (8)	140	Opp	171	222		328564X	Furnished	352XSAHX-*3 (8)	140	Opp	171	221			Furnished
863XBAHX-*5	500	Opp	60	74			Furnished								
ONE SPEED - DUAL SHAFT															
452XSAHX-*3 (8)	140	Opp	171			328481X	Furnished	452XSAHX-*3 (8)	140	Opp	171				Furnished
GEARED ADAPTERS															
628XAHX-3AH							Furnished	626XAHX-3AH							Furnished
								630XAHX-3AH							Furnished
								645XAHX-3AH							Furnished

CAUTION: 660/680 Series: Applications above 1500 RPM output shaft speed, contact Chelsea Technical Service for approval.

NOTE: The AK & XK output flanges can not be used with the "A" & "C" ratios on the 489 Series P.T.O.s due to mounting stud interference. Use a RA or RB rotatable flange for the XK and the RA for the AK flange.

NOTE: The 100 Series Output Shaft will Interfer with the Bulge on the Right Side of the Transmission. Use the Adapter shown (626XAHX-3XX) to space the 100 Series out from the Transmission to Clear the Bulge.

NOTE: Two Gear P.T.O.s with Direct Mount Pumps may Not Clear the Transmission Bulge on the Right Side. Check for Clearance Before Mounting the P.T.O. and Pump.

NOTE: If Ordering the 230/231 Series with the Shaft Brake Option, order the "BA" Output for Automatic Transmissions and the "BD" Output for Manual Transmissions.

NOTE: The 422XBAH must use one of the Geared Adapters Listed on the Application Page. Direction of Rotation Shown is the Final Output Shaft Rotation w/ Geared Adapter.

(2) Filler block furnished with P.T.O.
(8) Input Gear Part No. 5-P-1004
(20) Input Gear Part No. 5-P-1102
(21) Input Gear Part No. 5-P-1103
(25) Input Gear Part No. 5-P-581

January 2008

Parker Hannifin Corporation
Chelsea Products Division
Olive Branch, MS 38654 USA

MO-11F10A-S11	MO-12F10A-E12	MO-12G10A-E12	MO-12G9A-M12	MO-13F9A-S13	MO-13G9A-D13	MO-14F10A-E16	MO-14F9A-S14
MO-11G10A-D11	MO-12F10A-S12	MO-12G10A-M12	MO-12G9A-S12	MO-13G10A-D13	MO-13G9A-E13	MO-14F10A-M16	MO-14G10A-D14
MO-11G10A-E11	MO-12F9A-E12	MO-12G10A-S12	MO-13F10A-E13	MO-13G10A-E13	MO-13G9A-M13	MO-14F10A-S14	MO-14G10A-E14
MO-11G10A-M11	MO-12F9A-S12	MO-12G9A-D12	MO-13F10A-S13	MO-13G10A-M13	MO-13G9A-S13	MO-14F10A-S16	MO-14G10A-E16
MO-11G10A-S11	MO-12G10A-D12	MO-12G9A-E12	MO-13F9A-E13	MO-13G10A-S13	MO-14F10A-E14	MO-14F9A-E14	MO-14G10A-M14

BOTTOM SIDE ONLY

TRANSMISSION GEAR DATA:
BOT 8-Bolt Opening Gear FORWARD of Centerline
45 Teeth - SPUR
PITCH LINE TO APERTURE FACE:
.8100" (20.5740MM)

RIGHT SIDE ONLY

TRANSMISSION GEAR DATA:
R.H. 6-Bolt Opening Gear FORWARD of Centerline
45 Teeth - SPUR
PITCH LINE TO APERTURE FACE:
1.0850" (27.5600MM)

Caution: Application Approval Required for P.T.O. Output Shaft Speeds Above 2500 R.P.M.

BOTTOM Side P.T.O. Model	Inter. Torq.	Dir. Rot.	Engine % Hi	Engine % Rev	Filler Block	Adapter Assy.	Stud Kit	RIGHT Side P.T.O. Model	Inter. Torq.	Dir. Rot.	Engine % Hi	Engine % Rev	Filler Block	Adapter Assy.	Stud Kit
ONE SPEED - SINGLE GEAR - MECHANICAL SHIFT															
100XRAHX-*3 (1)	125	Eng	191		7-A-032(P)	328481X	Furnished	100XRAHX-*3 (1)	125	Eng	191				Furnished
812XKAHX-*3	400	Eng	127				Furnished								
ONE SPEED - TWO GEAR - MECHANICAL SHIFT															
221ZCAHX-*3	250	Opp	85		7-A-032(P)(2)	328564X	Furnished	221XCAHX-*3	250	Opp	85		7-A-032 (2)		Furnished
221ZEAHX-*3	250	Opp	98			328564X	Furnished	221XEAHX-*3	250	Opp	98				Furnished
221ZLAHX-*3	200	Opp	132			328564X	Furnished	221XLAHX-*3	200	Opp	132				Furnished
221ZPAHX-*3	200	Opp	159			328564X	Furnished	221XPAHX-*3	200	Opp	159				Furnished
442ZAAHX-*3 (4)	250	Opp	75			328564X	Furnished	442XBAHX-*3 (3)	250	Eng	75			REQUIRED	Furnished
442ZCAHX-*3 (5)	250	Opp	96			328564X	Furnished	442XAAHX-*3 (4)	250	Opp	75				Furnished
442ZFAHX-*3 (6)	250	Opp	118			328564X	Furnished	442XCAHX-*3 (5)	250	Opp	96				Furnished
442ZHAHX-*3 (7)	250	Opp	137			328564X	Furnished	442XFAHX-*3 (6)	250	Opp	118				Furnished
442ZLAHX-*3 (8)	250	Opp	153			328564X	Furnished	442XHAHX-*3 (7)	250	Opp	137				Furnished
442ZQAHX-*3 (8)	225	Opp	165			328564X	Furnished	442XLAHX-*3 (8)	250	Opp	153				Furnished
442ZRAHX-*3 (8)	225	Opp	191			328564X	Furnished	442XQAHX-*3 (8)	225	Opp	165				Furnished
442ZSAHX-*3 (8)	200	Opp	227			328564X	Furnished	442XRAHX-*3 (8)	225	Opp	191				Furnished
442ZUAHX-*3 (8)	195	Opp	270			328564X	Furnished	442XSAHX-*3 (8)	200	Opp	227				Furnished
442ZWAHX-*3 (8)	175	Opp	318			328564X	Furnished	442XUAHX-*3 (8)	195	Opp	270				Furnished
442ZXAHX-*3 (8)	140	Opp	376			328564X	Furnished	442XWAHX-*3 (8)	175	Opp	318				Furnished
489XAAHX-*3 (4)	250	Opp	75				Furnished	442XXAHX-*3 (8)	140	Opp	376				Furnished
489XCAHX-*3 (5)	250	Opp	96				Furnished	660XFAHX-*3 (9)	375	Opp	118				Furnished
489XFAHX-*3 (6)	250	Opp	118				Furnished	660XQAHX-*3 (10)	375	Opp	165				Furnished
489XHAHX-*3 (7)	250	Opp	137				Furnished	660XSAHX-*3 (11)	325	Opp	227				Furnished
489XLAHX-*3 (8)	250	Opp	153				Furnished								
489XQAHX-*3 (8)	225	Opp	165				Furnished								
489XRAHX-*3 (8)	225	Opp	191				Furnished								
489XSAHX-*3 (8)	200	Opp	227				Furnished								
489XUAHX-*3 (8)	195	Opp	270				Furnished								
489XWAHX-*3 (8)	175	Opp	318				Furnished								
489XXAHX-*3 (8)	140	Opp	376				Furnished								

Continued Next Page

CAUTION: Do not use geared adapters with 442 "A" and "C" ratios.

CAUTION: 660/680 Series: Applications above 1500 RPM output shaft speed, contact Chelsea Technical Service for approval.

NOTE: The AK & XK output flanges can not be used with the "A" & "C" ratios on the 489 Series P.T.O.s due to mounting stud interference. Use a RA or RB rotatable flange for the XK and the RA for the AK flange.

NOTE: The 100 Series Output Shaft will Interfer with the Bulge on the Right Side of the Transmission. Use the Adapter shown (626XAHX-3XX) to space the 100 Series out from the Transmission to Clear the Bulge.

NOTE: Two Gear P.T.O.s with Direct Mount Pumps may Not Clear the Transmission Bulge on the Right Side. Check for Clearance Before Mounting the P.T.O. and Pump.

NOTE: If Ordering the 230/231 Series with the Shaft Brake Option, order the "BA" Output for Automatic Transmissions and the "BD" Output for Manual Transmissions.

NOTE: The 422XBAH must use one of the Geared Adapters Listed on the Application Page. Direction of Rotation Shown is the Final Output Shaft Rotation w/ Geared Adapter.

(1) Gear and Shaft Kit No. KXA-2-P-565
(2) Filler block furnished with P.T.O.
(3) Input Gear Part No. 5-P-1418
(4) Input Gear Part No. 5-P-1280
(5) Input Gear Part No. 5-P-1287
(6) Input Gear Part No. 5-P-1077
(7) Input Gear Part No. 5-P-1364
(8) Input Gear Part No. 5-P-1004
(9) Input Gear Part No. 5-P-1242
(10) Input Gear Part No. 5-P-1246
(11) Input Gear Part No. 5-P-1322

January 2008

Parker Hannifin Corporation
Chelsea Products Division
Olive Branch, MS 38654 USA

MO-11F10A-S11	MO-12F10A-E12	MO-12G10A-E12	MO-12G9A-M12	MO-13F9A-S13	MO-13G9A-D13	MO-14F10A-E16	MO-14F9A-S14
MO-11G10A-D11	MO-12F10A-S12	MO-12G10A-M12	MO-12G9A-S12	MO-13G10A-D13	MO-13G9A-E13	MO-14F10A-M16	MO-14G10A-D14
MO-11G10A-E11	MO-12F9A-E12	MO-12G10A-S12	MO-13F10A-E13	MO-13G10A-E13	MO-13G9A-M13	MO-14F10A-S14	MO-14G10A-E14
MO-11G10A-M11	MO-12F9A-S12	MO-12G9A-D12	MO-13F10A-S13	MO-13G10A-M13	MO-13G9A-S13	MO-14F10A-S16	MO-14G10A-E16
MO-11G10A-S11	MO-12G10A-D12	MO-12G9A-E12	MO-13F9A-E13	MO-13G10A-S13	MO-14F10A-E14	MO-14F9A-E14	MO-14G10A-M14

BOTTOM SIDE ONLY

TRANSMISSION GEAR DATA:

BOT 8-Bolt Opening Gear FORWARD of Centerline

45 Teeth - SPUR

PITCH LINE TO APERTURE FACE:

.8100" (20.5740MM)

RIGHT SIDE ONLY

TRANSMISSION GEAR DATA:

R.H. 6-Bolt Opening Gear FORWARD of Centerline

45 Teeth - SPUR

PITCH LINE TO APERTURE FACE:

1.0850" (27.5600MM)

Caution: Application Approval Required for P.T.O. Output Shaft Speeds Above 2500 R.P.M.

BOTTOM Side P.T.O. Model	Inter. Torq.	Dir. Rot.	Engine % Hi	Engine % Rev	Filler Block	Adapter Assy.	Stud Kit	RIGHT Side P.T.O. Model	Inter. Torq.	Dir. Rot.	Engine % Hi	Engine % Rev	Filler Block	Adapter Assy.	Stud Kit
ONE SPEED - TWO GEAR - MECHANICAL SHIFT															
680XFAHX-*3 (9)	375	Opp	118				Furnished								
680XQAHX-*3 (10)	375	Opp	165				Furnished								
680XSAHX-*3 (11)	325	Opp	227				Furnished								
823XBAHX-*3 (12)	500	Opp	80				Furnished								
823XJAHX-*3 (13)	500	Opp	122				Furnished								
823XMAHX-*3 (14)	500	Opp	143				Furnished								
823XRAHX-*3 (15)	400	Opp	197				Furnished								
823XTKTX-*3 (16)	350	Opp	239		8-A-165 (2)		Furnished								
880XBAHX-*3 (17)	500	Opp	80				Furnished								
880XDAHX-*3 (18)	500	Opp	95				Furnished								
880XGAHX-*3 (19)	500	Opp	104				Furnished								
880XJAHX-*3 (20)	500	Opp	122				Furnished								
880XMAHX-*3 (21)	500	Opp	143				Furnished								
880XQAHX-*3 (22)	450	Opp	167				Furnished								
880XRAHX-*3 (23)	400	Opp	197				Furnished								
880XTAHX-*3 (24)	350	Opp	254				Furnished								
ONE SPEED - TWO GEAR - POWERSHIFT (AIR)															
236ZDAHX-*3 (8)	250	Opp	124			328564X	Furnished	230XAAJX-*3	250	Opp	62				Furnished
236ZKAHX-*3 (8)	250	Opp	159			328564X	Furnished	230XBAJX-*3	250	Opp	81				Furnished
236ZQAHX-*3 (8)	250	Opp	214			328564X	Furnished	230XDAJX-*3	250	Opp	93				Furnished
236ZUAHX-*3 (8)	225	Opp	244			328564X	Furnished	230XKAJX-*3	250	Opp	126				Furnished
885XBAHX-*3 (17)	500	Opp	80				Furnished	230XQAJX-*3	250	Opp	168				Furnished
885XGAHX-*3 (19)	500	Opp	104				Furnished	230XUAJX-*3	225	Opp	269				Furnished
885XJAHX-*3 (20)	500	Opp	122				Furnished	236XDAHX-*3 (8)	250	Opp	124				Furnished
885XMAHX-*3 (21)	500	Opp	143				Furnished	236XKAHX-*3 (8)	250	Opp	159				Furnished
								236XQAHX-*3 (8)	250	Opp	214				Furnished
								236XUAHX-*3 (8)	225	Opp	244				Furnished

Continued Next Page

CAUTION: Do not use geared adapters with 442 "A" and "C" ratios.

CAUTION: 660/680 Series: Applications above 1500 RPM output shaft speed, contact Chelsea Technical Service for approval.

NOTE: The AK & XK output flanges can not be used with the "A" & "C" ratios on the 489 Series P.T.O.s due to mounting stud interference. Use a RA or RB rotatable flange for the XK and the RA for the AK flange.

NOTE: The 100 Series Output Shaft will Interfer with the Bulge on the Right Side of the Transmission. Use the Adapter shown (626XAHX-3XX) to space the 100 Series out from the Transmission to Clear the Bulge.

NOTE: Two Gear P.T.O.s with Direct Mount Pumps may Not Clear the Transmission Bulge on the Right Side. Check for Clearance Before Mounting the P.T.O. and Pump.

NOTE: If Ordering the 230/231 Series with the Shaft Brake Option, order the "BA" Output for Automatic Transmissions and the "BD" Output for Manual Transmissions.

NOTE: The 422XBAH must use one of the Geared Adapters Listed on the Application Page. Direction of Rotation Shown is the Final Output Shaft Rotation w/ Geared Adapter.

(2) Filler block furnished with P.T.O.
(8) Input Gear Part No. 5-P-1004
(9) Input Gear Part No. 5-P-1242
(10) Input Gear Part No. 5-P-1246
(11) Input Gear Part No. 5-P-1322
(12) Input Gear Part No. 5-P-285
(13) Input Gear Part No. 5-P-325
(14) Input Gear Part No. 5-P-283
(15) Input Gear Part No. 5-P-721
(16) Input Gear Part No. 5-P-1395
(17) Input Gear Part No. 5-P-1100
(18) Input Gear Part No. 5-P-1101
(19) Input Gear Part No. 5-P-1135
(20) Input Gear Part No. 5-P-1102
(21) Input Gear Part No. 5-P-1103
(22) Input Gear Part No. 5-P-1385
(23) Input Gear Part No. 5-P-1104
(24) Input Gear Part No. 5-P-1105

January 2008

Parker Hannifin Corporation
Chelsea Products Division
Olive Branch, MS 38654 USA

MO-11F10A-S11	MO-12F10A-E12	MO-12G10A-E12	MO-12G9A-M12	MO-13F9A-S13	MO-13G9A-D13	MO-14F10A-E16	MO-14F9A-S14
MO-11G10A-D11	MO-12F10A-S12	MO-12G10A-M12	MO-12G9A-S12	MO-13G10A-D13	MO-13G9A-E13	MO-14F10A-M16	MO-14G10A-D14
MO-11G10A-E11	MO-12F9A-E12	MO-12G10A-S12	MO-13F10A-E13	MO-13G10A-E13	MO-13G9A-M13	MO-14F10A-S14	MO-14G10A-E14
MO-11G10A-M11	MO-12F9A-S12	MO-12G9A-D12	MO-13F10A-S13	MO-13G10A-M13	MO-13G9A-S13	MO-14F10A-S16	MO-14G10A-E16
MO-11G10A-S11	MO-12G10A-D12	MO-12G9A-E12	MO-13F9A-E13	MO-13G10A-S13	MO-14F10A-E14	MO-14F9A-E14	MO-14G10A-M14

BOTTOM SIDE ONLY

TRANSMISSION GEAR DATA:
BOT 8-Bolt Opening Gear FORWARD of Centerline
45 Teeth - SPUR

PITCH LINE TO APERTURE FACE:
.8100" (20.5740MM)

RIGHT SIDE ONLY

TRANSMISSION GEAR DATA:
R.H. 6-Bolt Opening Gear FORWARD of Centerline
45 Teeth - SPUR

PITCH LINE TO APERTURE FACE:
1.0850" (27.5600MM)

Caution: Application Approval Required for P.T.O. Output Shaft Speeds Above 2500 R.P.M.

BOTTOM Side P.T.O. Model	Inter. Torq.	Dir. Rot.	Engine % Hi	Engine % Rev	Filler Block	Adapter Assy.	Stud Kit	RIGHT Side P.T.O. Model	Inter. Torq.	Dir. Rot.	Engine % Hi	Engine % Rev	Filler Block	Adapter Assy.	Stud Kit
ONE SPEED - FORWARD & REVERSE															
340XFAHX-*5 (25)	200	Opp	103	108	7-A-140(P)(2) 7-A-032(P)	328481X	Furnished	340XFAHX-*5 (25)	200	Opp	103	108	7-A-140 (2)		Furnished
352ZSAHX-*3 (8)	140	Opp	230	298		328564X	Furnished	352XSAHX-*3 (8)	140	Opp	230	298			Furnished
863XBAHX-*5	500	Opp	80	100			Furnished								
GEARED ADAPTERS															
628XAHX-3AH							Furnished	626XAHX-3AH							Furnished
								630XAHX-3AH							Furnished
								645XAHX-3AH							Furnished

CAUTION: Do not use geared adapters with 442 "A" and "C" ratios.

CAUTION: 660/680 Series: Applications above 1500 RPM output shaft speed, contact Chelsea Technical Service for approval.

NOTE: The AK & XK output flanges can not be used with the "A" & "C" ratios on the 489 Series P.T.O.s due to mounting stud interference. Use a RA or RB rotatable flange for the XK and the RA for the AK flange.

NOTE: The 100 Series Output Shaft will Interfer with the Bulge on the Right Side of the Transmission. Use the Adapter shown (626XAHX-3XX) to space the 100 Series out from the Transmission to Clear the Bulge.

NOTE: Two Gear P.T.O.s with Direct Mount Pumps may Not Clear the Transmission Bulge on the Right Side. Check for Clearance Before Mounting the P.T.O. and Pump.

NOTE: If Ordering the 230/231 Series with the Shaft Brake Option, order the "BA" Output for Automatic Transmissions and the "BD" Output for Manual Transmissions.

NOTE: The 422XBAH must use one of the Geared Adapters Listed on the Application Page. Direction of Rotation Shown is the Final Output Shaft Rotation w/ Geared Adapter.

(2) Filler block furnished with P.T.O.
(8) Input Gear Part No. 5-P-1004
(25) Input Gear Part No. 5-P-581

Parker Hannifin Corporation
Chelsea Products Division
Olive Branch, MS 38654 USA

MO-11F9B-E11	MO-11G9B-S11	MO-12G9B-M12	MO-13G9B-E13	MO-14G9B-D14	MO-15F9B-S15	REO9-115B	REX9-115B
MO-11F9B-S11	MO-12F9B-E12	MO-12G9B-S12	MO-13G9B-M13	MO-14G9B-E14	MO-15G9B-D15	REO9-125B	REX9-115R
MO-11G9B-D11	MO-12F9B-S12	MO-13F9B-E13	MO-13G9B-S13	MO-14G9B-M14	MO-15G9B-E15	REO9-135B	REX9-125B
MO-11G9B-E11	MO-12G9B-D12	MO-13F9B-S13	MO-14F9B-E14	MO-14G9B-S14	MO-15G9B-M15	REO9-145B	REX9-125R
MO-11G9B-M11	MO-12G9B-E12	MO-13G9B-D13	MO-14F9B-S14	MO-15F9B-E15	MO-15G9B-S15	REO9-155B	REX9-135B

BOTTOM SIDE ONLY

TRANSMISSION GEAR DATA:

BOT 8-Bolt Opening Gear FORWARD of Centerline

45 Teeth - SPUR

PITCH LINE TO APERTURE FACE:

.8100" (20.5740MM)

RIGHT SIDE ONLY

TRANSMISSION GEAR DATA:

R.H. 6-Bolt Opening Gear FORWARD of Centerline

45 Teeth - SPUR

PITCH LINE TO APERTURE FACE:

1.0850" (27.5600MM)

Caution: Application Approval Required for P.T.O. Output Shaft Speeds Above 2500 R.P.M.

ONE SPEED - TWO GEAR - MECHANICAL SHIFT

BOTTOM Side P.T.O. Model	Inter. Torq.	Dir. Rot.	Engine % Hi	Engine % Rev	Filler Block	Adapter Assy.	Stud Kit	RIGHT Side P.T.O. Model	Inter. Torq.	Dir. Rot.	Engine % Hi	Engine % Rev	Filler Block	Adapter Assy.	Stud Kit
442ZAAHX-*3 (3)	250	Opp	64			328564X	Furnished	221XCAHX-*3	250	Eng	73		7-A-032(P)(1)	329138X	Furnished
442ZCAHX-*3 (4)	250	Opp	82			328564X	Furnished	221XEAHX-*3	250	Eng	84			329138X	Furnished
442ZFAHX-*3 (5)	250	Opp	101			328564X	Furnished	221XLAHX-*3	200	Eng	113			329138X	Furnished
442ZHAHX-*3 (6)	250	Opp	117			328564X	Furnished	221XPAHX-*3	200	Eng	136			329138X	Furnished
442ZLAHX-*3 (7)	250	Opp	131			328564X	Furnished	442XBAHX-*3 (2)	250	Eng	64			REQUIRED	Furnished
442ZQAHX-*3 (7)	225	Opp	141			328564X	Furnished	442XAAHX-*3 (3)	250	Opp	64				Furnished
442ZRAHX-*3 (7)	225	Opp	163			328564X	Furnished	442XCAHX-*3 (4)	250	Opp	82				Furnished
442ZSAHX-*3 (7)	200	Opp	194			328564X	Furnished	442XFAHX-*3 (5)	250	Opp	101				Furnished
489XAAHX-*3 (3)	250	Opp	64				Furnished	442XHAHX-*3 (6)	250	Opp	117				Furnished
489XCAHX-*3 (4)	250	Opp	82				Furnished	442XLAHX-*3 (7)	250	Opp	131				Furnished
489XFAHX-*3 (5)	250	Opp	101				Furnished	442XQAHX-*3 (7)	225	Opp	141				Furnished
489XHAHX-*3 (6)	250	Opp	117				Furnished	442XRAHX-*3 (7)	225	Opp	163				Furnished
489XLAHX-*3 (7)	250	Opp	131				Furnished	442XSAHX-*3 (7)	200	Opp	194				Furnished
489XQAHX-*3 (7)	225	Opp	141				Furnished	660XFAHX-*3 (8)	375	Opp	101				Furnished
489XRAHX-*3 (7)	225	Opp	163				Furnished	660XQAHX-*3 (9)	375	Opp	141				Furnished
489XSAHX-*3 (7)	200	Opp	194				Furnished	660XSAHX-*3 (10)	325	Opp	194				Furnished
680XFAHX-*3 (8)	375	Opp	101				Furnished								
680XQAHX-*3 (9)	375	Opp	141				Furnished								
680XSAHX-*3 (10)	325	Opp	194				Furnished								
823XBAHX-*3 (11)	500	Opp	69				Furnished								
823XJAHX-*3 (12)	500	Opp	104				Furnished								
823XMAHX-*3 (13)	500	Opp	122				Furnished								
823XRAHX-*3 (14)	400	Opp	169				Furnished								
823XTKTX-*3 (15)	350	Opp	205		8-A-165(P)(1)		Furnished								
880XBAHX-*3 (16)	500	Opp	69				Furnished								
880XDAHX-*3 (17)	500	Opp	82				Furnished								
880XGAHX-*3 (18)	500	Opp	89				Furnished								
880XJAHX-*3 (19)	500	Opp	104				Furnished								
880XMAHX-*3 (20)	500	Opp	122				Furnished								
880XQAHX-*3 (21)	450	Opp	143				Furnished								

Continued Next Page

CAUTION: Do not use geared adapters with 442 "A" and "C" ratios.

CAUTION: 660/680 Series: Applications above 1500 RPM output shaft speed, contact Chelsea Technical Service for approval.

NOTE: Use constant mesh P.T.O.s only on this application.

NOTE: The AK & XK output flanges can not be used with the "A" & "C" ratios on the 489 Series PTOs due to mounting stud interference. Use a RA or RB rotatable flange for the XK and the RA for the AK flange.

NOTE: Two gear P.T.O.s with direct mount pumps may not clear the transmission bulge on the right side. Check for clearance before mounting the P.T.O. and pump.

NOTE: If Ordering the 230/231 Series with the Shaft Brake Option, order the "BA" Output for Automatic Transmissions and the "BD" Output for Manual Transmissions.

NOTE: The 422XBAH must use one of the Geared Adapters Listed on the Application Page. Direction of Rotation Shown is the Final Output Shaft Rotation w/ Geared Adapter.

(1) Filler block furnished with P.T.O.
(2) Input Gear Part No. 5-P-1418
(3) Input Gear Part No. 5-P-1280
(4) Input Gear Part No. 5-P-1287
(5) Input Gear Part No. 5-P-1077
(6) Input Gear Part No. 5-P-1364
(7) Input Gear Part No. 5-P-1004
(8) Input Gear Part No. 5-P-1242
(9) Input Gear Part No. 5-P-1246
(10) Input Gear Part No. 5-P-1322
(11) Input Gear Part No. 5-P-285
(12) Input Gear Part No. 5-P-325
(13) Input Gear Part No. 5-P-283
(14) Input Gear Part No. 5-P-721
(15) Input Gear Part No. 5-P-1395
(16) Input Gear Part No. 5-P-1100
(17) Input Gear Part No. 5-P-1101
(18) Input Gear Part No. 5-P-1135
(19) Input Gear Part No. 5-P-1102
(20) Input Gear Part No. 5-P-1103
(21) Input Gear Part No. 5-P-1385

Parker Hannifin Corporation
Chelsea Products Division
Olive Branch, MS 38654 USA

MO-11F9B-E11	MO-11G9B-S11	MO-12G9B-M12	MO-13G9B-E13	MO-14G9B-D14	MO-15F9B-S15	REO9-115B	REX9-115B
MO-11F9B-S11	MO-12F9B-E12	MO-12G9B-S12	MO-13G9B-M13	MO-14G9B-E14	MO-15G9B-D15	REO9-125B	REX9-115R
MO-11G9B-D11	MO-12F9B-S12	MO-13F9B-E13	MO-13G9B-S13	MO-14G9B-M14	MO-15G9B-E15	REO9-135B	REX9-125B
MO-11G9B-E11	MO-12G9B-D12	MO-13F9B-S13	MO-14F9B-E14	MO-14G9B-S14	MO-15G9B-M15	REO9-145B	REX9-125R
MO-11G9B-M11	MO-12G9B-E12	MO-13G9B-D13	MO-14F9B-S14	MO-15F9B-E15	MO-15G9B-S15	REO9-155B	REX9-135B

BOTTOM SIDE ONLY

TRANSMISSION GEAR DATA:
BOT 8-Bolt Opening Gear FORWARD of Centerline
45 Teeth - SPUR
PITCH LINE TO APERTURE FACE:
.8100" (20.5740MM)

RIGHT SIDE ONLY

TRANSMISSION GEAR DATA:
R.H. 6-Bolt Opening Gear FORWARD of Centerline
45 Teeth - SPUR
PITCH LINE TO APERTURE FACE:
1.0850" (27.5600MM)

Caution: Application Approval Required for P.T.O. Output Shaft Speeds Above 2500 R.P.M.

BOTTOM Side P.T.O. Model	Inter. Torq.	Dir. Rot.	Engine % Hi	Engine % Rev	Filler Block	Adapter Assy.	Stud Kit	RIGHT Side P.T.O. Model	Inter. Torq.	Dir. Rot.	Engine % Hi	Engine % Rev	Filler Block	Adapter Assy.	Stud Kit
ONE SPEED - TWO GEAR - MECHANICAL SHIFT															
880XRAHX-*3 (22)	400	Opp	169				Furnished								
880XTAHX-*3 (23)	350	Opp	218				Furnished								
ONE SPEED - TWO GEAR - POWERSHIFT (AIR)															
236ZDAHX-*3 (7)	250	Opp	106			328564X	Furnished	230XAAJX-*3	250	Opp	53				Furnished
236ZKAHX-*3 (7)	250	Opp	135			328564X	Furnished	230XBAJX-*3	250	Opp	69				Furnished
885XBAHX-*3 (16)	500	Opp	69				Furnished	230XDAJX-*3	250	Opp	80				Furnished
885XGAHX-*3 (18)	500	Opp	89				Furnished	230XKAJX-*3	250	Opp	108				Furnished
885XJAHX-*3 (19)	500	Opp	104				Furnished	230XQAJX-*3	250	Opp	144				Furnished
885XMAHX-*3 (20)	500	Opp	122				Furnished	230XUAJX-*3	225	Opp	231				Furnished
								236XDAHX-*3 (7)	250	Opp	106				Furnished
								236XKAHX-*3 (7)	250	Opp	135				Furnished
ONE SPEED - FORWARD & REVERSE															
340XFAHX-*5 (24)	200	Opp	88	93	7-A-140(P)(1) 7-A-032(P)	328481X	Furnished	340XFAHX-*5 (24)	200	Opp	88	93	7-A-140 (1)		Furnished
352ZSAHX-*3 (7)	140	Opp	197	255		328564X	Furnished	352XSAHX-*3 (7)	140	Opp	197	255			Furnished
863XBAHX-*5	500	Opp	69	85			Furnished								
GEARED ADAPTERS															
628XAHX-3AH							Furnished	626XAHX-3AH							Furnished
								630XAHX-3AH							Furnished
								645XAHX-3AH							Furnished

CAUTION: Do not use geared adapters with 442 "A" and "C" ratios.

CAUTION: 660/680 Series: Applications above 1500 RPM output shaft speed, contact Chelsea Technical Service for approval.

NOTE: Use constant mesh P.T.O.s only on this application.

NOTE: The AK & XK output flanges can not be used with the "A" & "C" ratios on the 489 Series PTOs due to mounting stud interference. Use a RA or RB rotatable flange for the XK and the RA for the AK flange.

NOTE: Two gear P.T.O.s with direct mount pumps may not clear the transmission bulge on the right side. Check for clearance before mounting the P.T.O. and pump.

NOTE: If Ordering the 230/231 Series with the Shaft Brake Option, order the "BA" Output for Automatic Transmissions and the "BD" Output for Manual Transmissions.

NOTE: The 422XBAH must use one of the Geared Adapters Listed on the Application Page. Direction of Rotation Shown is the Final Output Shaft Rotation w/ Geared Adapter.

(1) Filler block furnished with P.T.O.
(7) Input Gear Part No. 5-P-1004
(16) Input Gear Part No. 5-P-1100
(18) Input Gear Part No. 5-P-1135
(19) Input Gear Part No. 5-P-1102
(20) Input Gear Part No. 5-P-1103
(22) Input Gear Part No. 5-P-1104
(23) Input Gear Part No. 5-P-1105
(24) Input Gear Part No. 5-P-581

January 2008

Parker Hannifin Corporation
Chelsea Products Division
Olive Branch, MS 38654 USA

MO-11F10C-E11	MO-11G10C-S11	MO-12G10C-M12	MO-13G10C-E13	MO-14F10C-M16	MO-14G10C-E16	MO-15F10C-E15	MO-15G10C-S15
MO-11F10C-S11	MO-12F10C-E12	MO-12G10C-S12	MO-13G10C-M13	MO-14F10C-S14	MO-14G10C-M14	MO-15F10C-S15	MO-16F10C-E16
MO-11G10C-D11	MO-12F10C-S12	MO-13F10C-E13	MO-13G10C-S13	MO-14F10C-S16	MO-14G10C-M16	MO-15G10C-D15	MO-16F10C-E18
MO-11G10C-E11	MO-12G10C-D12	MO-13F10C-S13	MO-14F10C-E14	MO-14G10C-D14	MO-14G10C-S14	MO-15G10C-E15	MO-16F10C-M18
MO-11G10C-M11	MO-12G10C-E12	MO-13G10C-D13	MO-14F10C-E16	MO-14G10C-E14	MO-14G10C-S16	MO-15G10C-M15	MO-16F10C-S16

BOTTOM SIDE ONLY

TRANSMISSION GEAR DATA:
BOT 8-Bolt Opening Gear FORWARD of Centerline
45 Teeth - SPUR
PITCH LINE TO APERTURE FACE:
.8100" (20.5740MM)

RIGHT SIDE ONLY

TRANSMISSION GEAR DATA:
R.H. 6-Bolt Opening Gear FORWARD of Centerline
45 Teeth - SPUR
PITCH LINE TO APERTURE FACE:
1.0850" (27.5600MM)

Caution: Application Approval Required for P.T.O. Output Shaft Speeds Above 2500 R.P.M.

BOTTOM Side P.T.O. Model	Inter. Torq.	Dir. Rot.	Engine % Hi	Engine % Rev	Filler Block	Adapter Assy.	Stud Kit	RIGHT Side P.T.O. Model	Inter. Torq.	Dir. Rot.	Engine % Hi	Engine % Rev	Filler Block	Adapter Assy.	Stud Kit
ONE SPEED - SINGLE GEAR - MECHANICAL SHIFT															
100XRAHX-*3 (1)	125	Eng	184			328481X	Furnished	100XRAHX-*3 (1)	125	Eng	184		7-A-2000		7170-46X
812XKAHX-*3	400	Eng	123				Furnished								
ONE SPEED - TWO GEAR - MECHANICAL SHIFT															
221ZCAHX-*3	250	Opp	82		7-A-032(P)(2)	328564X	Furnished	221XCAHX-*3	250	Opp	82		7-A-032 (2)		Furnished
221ZEAHX-*3	250	Opp	95			328564X	Furnished	221XEAHX-*3	250	Opp	95				Furnished
221ZLAHX-*3	200	Opp	127			328564X	Furnished	221XLAHX-*3	200	Opp	127				Furnished
221ZPAHX-*3	200	Opp	154			328564X	Furnished	221XPAHX-*3	200	Opp	154				Furnished
442ZAAHX-*3 (4)	250	Opp	72			328564X	Furnished	442XBAHX-*3 (3)	250	Eng	72			REQUIRED	Furnished
442ZCAHX-*3 (5)	250	Opp	92			328564X	Furnished	442XAAHX-*3 (4)	250	Opp	72				Furnished
442ZFAHX-*3 (6)	250	Opp	114			328564X	Furnished	442XCAHX-*3 (5)	250	Opp	92				Furnished
442ZHAHX-*3 (7)	250	Opp	132			328564X	Furnished	442XFAHX-*3 (6)	250	Opp	114				Furnished
442ZLAHX-*3 (8)	250	Opp	148			328564X	Furnished	442XHAHX-*3 (7)	250	Opp	132				Furnished
442ZQAHX-*3 (8)	225	Opp	159			328564X	Furnished	442XLAHX-*3 (8)	250	Opp	148				Furnished
442ZRAHX-*3 (8)	225	Opp	184			328564X	Furnished	442XQAHX-*3 (8)	225	Opp	159				Furnished
442ZSAHX-*3 (8)	200	Opp	219			328564X	Furnished	442XRAHX-*3 (8)	225	Opp	184				Furnished
442ZUAHX-*3 (8)	195	Opp	261			328564X	Furnished	442XSAHX-*3 (8)	200	Opp	219				Furnished
442ZWAHX-*3 (8)	175	Opp	307			328564X	Furnished	442XUAHX-*3 (8)	195	Opp	261				Furnished
442ZXAHX-*3 (8)	140	Opp	363			328564X	Furnished	442XWAHX-*3 (8)	175	Opp	307				Furnished
489XAAHX-*3 (4)	250	Opp	72				Furnished	442XXAHX-*3 (8)	140	Opp	363				Furnished
489XCAHX-*3 (5)	250	Opp	92				Furnished	660XFAHX-*3 (9)	375	Opp	114				Furnished
489XFAHX-*3 (6)	250	Opp	114				Furnished	660XQAHX-*3 (10)	375	Opp	159				Furnished
489XHAHX-*3 (7)	250	Opp	132				Furnished	660XSAHX-*3 (11)	325	Opp	219				Furnished
489XLAHX-*3 (8)	250	Opp	148				Furnished								
489XQAHX-*3 (8)	225	Opp	159				Furnished								
489XRAHX-*3 (8)	225	Opp	184				Furnished								
489XSAHX-*3 (8)	200	Opp	219				Furnished								
489XUAHX-*3 (8)	195	Opp	261				Furnished								
489XWAHX-*3 (8)	175	Opp	307				Furnished								
489XXAHX-*3 (8)	140	Opp	363				Furnished								

Continued Next Page

CAUTION: 660/680 Series: Applications above 1500 RPM output shaft speed, contact Chelsea Technical Service for approval.CAUTION: Do not use geared adapters with 442 "A" and "C" ratios.NOTE: The AK & XK output flanges can not be used with the "A" & "C" ratios on the 489 Series P.T.O.s due to mounting stud interference. Use a RA or RB rotatable flange for the XK and the RA for the AK flange.

NOTE: If Ordering the 230/231 Series with the Shaft Brake Option, order the "BA" Output for Automatic Transmissions and the "BD" Output for Manual Transmissions.

NOTE: The 422XBAH must use one of the Geared Adapters Listed on the Application Page. Direction of Rotation Shown is the Final Output Shaft Rotation w/ Geared Adapter.

(1) Gear and Shaft Kit No. KXA-2-P-565
(2) Filler block furnished with P.T.O.
(3) Input Gear Part No. 5-P-1418
(4) Input Gear Part No. 5-P-1280
(5) Input Gear Part No. 5-P-1287
(6) Input Gear Part No. 5-P-1077
(7) Input Gear Part No. 5-P-1364
(8) Input Gear Part No. 5-P-1004
(9) Input Gear Part No. 5-P-1242
(10) Input Gear Part No. 5-P-1246
(11) Input Gear Part No. 5-P-1322

MO-11F10C-E11	MO-11G10C-S11	MO-12G10C-M12	MO-13G10C-E13	MO-14F10C-M16	MO-14G10C-E16	MO-15F10C-E15	MO-15G10C-S15
MO-11F10C-S11	MO-12F10C-E12	MO-12G10C-S12	MO-13G10C-M13	MO-14F10C-S14	MO-14G10C-M14	MO-15F10C-S15	MO-16F10C-E16
MO-11G10C-D11	MO-12F10C-S12	MO-13F10C-E13	MO-13G10C-S13	MO-14F10C-S16	MO-14G10C-M16	MO-15G10C-D15	MO-16F10C-E18
MO-11G10C-E11	MO-12G10C-D12	MO-13F10C-S13	MO-14F10C-E14	MO-14G10C-D14	MO-14G10C-S14	MO-15G10C-E15	MO-16F10C-M18
MO-11G10C-M11	MO-12G10C-E12	MO-13G10C-D13	MO-14F10C-E16	MO-14G10C-E14	MO-14G10C-S16	MO-15G10C-M15	MO-16F10C-S16

BOTTOM SIDE ONLY

TRANSMISSION GEAR DATA:
BOT 8-Bolt Opening Gear FORWARD of Centerline
45 Teeth - SPUR
PITCH LINE TO APERTURE FACE:
.8100" (20.5740MM)

RIGHT SIDE ONLY

TRANSMISSION GEAR DATA:
R.H. 6-Bolt Opening Gear FORWARD of Centerline
45 Teeth - SPUR
PITCH LINE TO APERTURE FACE:
1.0850" (27.5600MM)

Caution: Application Approval Required for P.T.O. Output Shaft Speeds Above 2500 R.P.M.

BOTTOM Side P.T.O. Model	Inter. Torq.	Dir. Rot.	Engine % Hi	Engine % Rev	Filler Block	Adapter Assy.	Stud Kit	RIGHT Side P.T.O. Model	Inter. Torq.	Dir. Rot.	Engine % Hi	Engine % Rev	Filler Block	Adapter Assy.	Stud Kit
ONE SPEED - TWO GEAR - MECHANICAL SHIFT															
680XFAHX-*3 (9)	375	Opp	114				Furnished								
680XQAHX-*3 (10)	375	Opp	159				Furnished								
680XSAHX-*3 (11)	325	Opp	219				Furnished								
823XTKTX-*3 (12)	350	Opp	230		8-A-165 (2)		Furnished								
880XBAHX-*3 (13)	500	Opp	78				Furnished								
880XDAHX-*3 (14)	500	Opp	92				Furnished								
880XGAHX-*3 (15)	500	Opp	100				Furnished								
880XJAHX-*3 (16)	500	Opp	118				Furnished								
880XMAHX-*3 (17)	500	Opp	138				Furnished								
880XQAHX-*3 (18)	450	Opp	162				Furnished								
880XRAHX-*3 (19)	400	Opp	191				Furnished								
880XTAHX-*3 (20)	350	Opp	245				Furnished								
ONE SPEED - TWO GEAR - POWERSHIFT (AIR)															
236ZDAHX-*3 (8)	250	Opp	120			328564X	Furnished	230XAAJX-*3	250	Opp	60				Furnished
236ZKAHX-*3 (8)	250	Opp	153			328564X	Furnished	230XBAJX-*3	250	Opp	78				Furnished
236ZQAHX-*3 (8)	250	Opp	206			328564X	Furnished	230XDAJX-*3	250	Opp	90				Furnished
236ZUAHX-*3 (8)	225	Opp	236			328564X	Furnished	230XKAJX-*3	250	Opp	122				Furnished
885XBAHX-*3 (13)	500	Opp	78				Furnished	230XQAJX-*3	250	Opp	162				Furnished
885XGAHX-*3 (15)	500	Opp	100				Furnished	230XUAJX-*3	225	Opp	260				Furnished
885XJAHX-*3 (16)	500	Opp	118				Furnished	236XDAHX-*3 (8)	250	Opp	120				Furnished
885XMAHX-*3 (17)	500	Opp	138				Furnished	236XKAHX-*3 (8)	250	Opp	153				Furnished
								236XQAHX-*3 (8)	250	Opp	206				Furnished
								236XUAHX-*3 (8)	225	Opp	236				Furnished
ONE SPEED - FORWARD & REVERSE															
340XFAHX-*5 (21)	200	Opp	100	105	7-A-140 (2) 7-A-032	328481X	Furnished	340XFAHX-*5 (21)	200	Opp	100	105	7-A-140 (2)		Furnished
352XSAHX-*3 (8)	140	Opp	222	287		328481X	Furnished	352XSAHX-*3 (8)	140	Opp	222	287			Furnished
863XBAHX-*5	500	Opp	78	96			Furnished								

Continued Next Page

CAUTION: 660/680 Series: Applications above 1500 RPM output shaft speed, contact Chelsea Technical Service for approval.CAUTION: Do not use geared adapters with 442 "A" and "C" ratios.NOTE: The AK & XK output flanges can not be used with the "A" & "C" ratios on the 489 Series P.T.O.s due to mounting stud interference. Use a RA or RB rotatable flange for the XK and the RA for the AK flange.

NOTE: If Ordering the 230/231 Series with the Shaft Brake Option, order the "BA" Output for Automatic Transmissions and the "BD" Output for Manual Transmissions.

NOTE: The 422XBAH must use one of the Geared Adapters Listed on the Application Page. Direction of Rotation Shown is the Final Output Shaft Rotation w/ Geared Adapter.

(2) Filler block furnished with P.T.O.
(8) Input Gear Part No. 5-P-1004
(9) Input Gear Part No. 5-P-1242
(10) Input Gear Part No. 5-P-1246
(11) Input Gear Part No. 5-P-1322
(12) Input Gear Part No. 5-P-1395
(13) Input Gear Part No. 5-P-1100
(14) Input Gear Part No. 5-P-1101
(15) Input Gear Part No. 5-P-1135
(16) Input Gear Part No. 5-P-1102
(17) Input Gear Part No. 5-P-1103
(18) Input Gear Part No. 5-P-1385
(19) Input Gear Part No. 5-P-1104
(20) Input Gear Part No. 5-P-1105
(21) Input Gear Part No. 5-P-581

January 2008

Parker Hannifin Corporation
Chelsea Products Division
Olive Branch, MS 38654 USA

MO-11F10C-E11	MO-11G10C-S11	MO-12G10C-M12	MO-13G10C-E13	MO-14F10C-M16	MO-14G10C-E16	MO-15F10C-E15	MO-15G10C-S15
MO-11F10C-S11	MO-12F10C-E12	MO-12G10C-S12	MO-13G10C-M13	MO-14F10C-S14	MO-14G10C-M14	MO-15F10C-S15	MO-16F10C-E16
MO-11G10C-D11	MO-12F10C-S12	MO-13F10C-E13	MO-13G10C-S13	MO-14F10C-S16	MO-14G10C-M16	MO-15G10C-D15	MO-16F10C-E18
MO-11G10C-E11	MO-12G10C-D12	MO-13F10C-S13	MO-14F10C-E14	MO-14G10C-D14	MO-14G10C-S14	MO-15G10C-E15	MO-16F10C-M18
MO-11G10C-M11	MO-12G10C-E12	MO-13G10C-D13	MO-14F10C-E16	MO-14G10C-E14	MO-14G10C-S16	MO-15G10C-M15	MO-16F10C-S16

BOTTOM SIDE ONLY

TRANSMISSION GEAR DATA:

BOT 8-Bolt Opening Gear FORWARD of Centerline

45 Teeth - SPUR

PITCH LINE TO APERTURE FACE:

.8100" (20.5740MM)

RIGHT SIDE ONLY

TRANSMISSION GEAR DATA:

R.H. 6-Bolt Opening Gear FORWARD of Centerline

45 Teeth - SPUR

PITCH LINE TO APERTURE FACE:

1.0850" (27.5600MM)

Caution: Application Approval Required for P.T.O. Output Shaft Speeds Above 2500 R.P.M.

BOTTOM Side P.T.O. Model	Inter. Torq.	Dir. Rot.	Engine % Hi	Engine % Rev	Filler Block	Adapter Assy.	Stud Kit	RIGHT Side P.T.O. Model	Inter. Torq.	Dir. Rot.	Engine % Hi	Engine % Rev	Filler Block	Adapter Assy.	Stud Kit
ONE SPEED - DUAL SHAFT															
452XSAHX-*3 (8)	140	Opp	222			328481X	Furnished	452XSAHX-*3 (8)	140	Opp	222				Furnished
GEARED ADAPTERS															
628XAHX-3AH							Furnished	626XAHX-3AH							Furnished
								630XAHX-3AH							Furnished
								645XAHX-3AH							Furnished

CAUTION: 660/680 Series: Applications above 1500 RPM output shaft speed, contact Chelsea Technical Service for approval.CAUTION: Do not use geared adapters with 442 "A" and "C" ratios.NOTE: The AK & XK output flanges can not be used with the "A" & "C" ratios on the 489 Series P.T.O.s due to mounting stud interference. Use a RA or RB rotatable flange for the XK and the RA for the AK flange.

NOTE: If Ordering the 230/231 Series with the Shaft Brake Option, order the "BA" Output for Automatic Transmissions and the "BD" Output for Manual Transmissions.

NOTE: The 422XBAH must use one of the Geared Adapters Listed on the Application Page. Direction of Rotation Shown is the Final Output Shaft Rotation w/ Geared Adapter.

(8) Input Gear Part No. 5-P-1004

Parker Hannifin Corporation
Chelsea Products Division
Olive Branch, MS 38654 USA

M-13Z12A-A13

REAR SIDE ONLY

TRANSMISSION GEAR DATA:

REAR 4-Bolt Opening Gear NON-STANDARD of Centerline

14 Teeth - INVOL

PITCH LINE TO APERTURE FACE:

0" (0MM)

Caution: Application Approval Required for P.T.O. Output Shaft Speeds Above 2500 R.P.M.

REAR MOUNT & THRUSHAFT

REAR Side P.T.O. Model	Inter. Torq.	Dir. Rot.	Engine % Hi	Engine % Rev	Filler Block	Adapter Assy.	Stud Kit	P.T.O. Model	Inter. Torq.	Dir. Rot.	Engine % Hi	Engine % Rev	Filler Block	Adapter Assy.	Stud Kit
522XTACX-*-*	258	Eng	110				Furnished								
522XVACX-*-*	258	Eng	139				Furnished								

WARNING: Any attempt to bypass transmission control may result in damage to Freedomline Transmissions.

CAUTION: P.T.O. installers must ensure that P.T.O.s are integrated in a manner that permits proper transmission control of P.T.O. engagement and disengagement.

NOTE: Freedomline Transmissions must control P.T.O. engagement. The "F" shift option provides a ZF Meritor approved 12v / Air Shift Kit and wiring harness to connect to the transmission (ZMTEC) controller.

NOTE: Order installation kit 328388-82X (12v / Air w/ wiring harness) to connect a 522 Series with the "H" shift option, or contact ZF Meritor (800-535-5560) for other wiring considerations or ZMTEC software questions.

MO-14Z12A-A14

REAR SIDE ONLY

TRANSMISSION GEAR DATA:

REAR 4-Bolt Opening Gear NON-STANDARD of Centerline

14 Teeth - INVOL

PITCH LINE TO APERTURE FACE:

0" (0MM)

Caution: Application Approval Required for P.T.O. Output Shaft Speeds Above 2500 R.P.M.

REAR Side P.T.O. Model	Inter. Torq.	Dir. Rot.	Engine % Hi	Engine % Rev	Filler Block	Adapter Assy.	Stud Kit	P.T.O. Model	Inter. Torq.	Dir. Rot.	Engine % Hi	Engine % Rev	Filler Block	Adapter Assy.	Stud Kit

REAR MOUNT & THRUSHAFT

522XTACX-*-*	258	Eng	183				Furnished								
522XVACX-*-*	258	Eng	230				Furnished								

WARNING: Any attempt to bypass transmission control may result in damage to Freedomline Transmissions.

CAUTION: P.T.O. installers must ensure that P.T.O.s are integrated in a manner that permits proper transmission control of P.T.O. engagement and disengagement.

NOTE: Freedomline Transmissions must control P.T.O. engagement. The "F" shift option provides a ZF Meritor approved 12v / Air Shift Kit and wiring harness to connect to the transmission (ZMTEC) controller.

NOTE: Order installation kit 328388-82X (12v / Air w/ wiring harness) to connect a 522 Series with the "H" shift option, or contact ZF Meritor (800-535-5560) for other wiring considerations or ZMTEC software questions.

MO-15Z16A-A15

REAR SIDE ONLY

TRANSMISSION GEAR DATA:

REAR 4-Bolt Opening Gear NON-STANDARD of Centerline

14 Teeth - INVOL

PITCH LINE TO APERTURE FACE:

0" (0MM)

Caution: Application Approval Required for P.T.O. Output Shaft Speeds Above 2500 R.P.M.

REAR Side P.T.O. Model	Inter. Torq.	Dir. Rot.	Engine % Hi	Engine % Rev	Filler Block	Adapter Assy.	Stud Kit
522XTACX-*-*	258	Eng	150				Furnished
522XVACX-*-*	258	Eng	189				Furnished

P.T.O. Model	Inter. Torq.	Dir. Rot.	Engine % Hi	Engine % Rev	Filler Block	Adapter Assy.	Stud Kit

REAR MOUNT & THRUSHAFT

Parker Chelsea

Parker Hannifin Corporation
Chelsea Products Division
Olive Branch, MS 38654 USA

MITSUBISHI

⚠ WARNING

FAILURE OR IMPROPER SELECTION OR IMPROPER USE OF THE PRODUCTS AND/OR SYSTEMS DESCRIBED HEREIN OR RELATED ITEMS CAN CAUSE DEATH, PERSONAL INJURY AND PROPERTY DAMAGE.

This document and other information from Parker Hannifin Corporation, its subsidiaries and authorized distributors provide product and/or system options for further investigation by users having technical expertise. It is important that you analyze all aspects of your application and review the information concerning the product or system in the current product catalog. Due to the variety of operating conditions and applications for these products or systems, the user, through its own analysis and testing, is solely responsible for making the final selection of the products and systems and assuring that all performance, safety and warning requirements of the application are met.

The products described herein, including without limitation, product features, specifications, designs, availability and pricing, are subject to change by Parker Hannifin Corporation and its subsidiaries at any time without notice.

Offer of Sale

The items described in this document are hereby offered for sale by Parker Hannifin Corporation, its subsidiaries or its authorized distributors. This offer and its acceptance are governed by the provisions stated in the "Offer of Sale".

© Copyright 2008, Parker Hannifin Corporation, All Rights Reserved

Parker Hannifin Corporation
Chelsea Products Division
Olive Branch, MS 38654 USA

Transmission Make and Model	P.T.O. Appl. Number	Number Forward Speeds	Teeth in P.T.O. Driver
M4	MTB-1	4	L37
M5	MTB-1	5	L37
M5S5 (Manual)	MTB-1	5	L37
M6	MTB-1	6	L37
M6S5 (Manual)	MTB-1	5	L37
M6S6 (Manual)	MTB-1	6	L37
M8S2X5 (Manual)	MTB-2	10	L29
M8S2X5 (10.060/1.0 ratio after 4/94)	MTB-5	10	L29
M8S5 (Model FM-557)	MTB-3	8	L28
M8S6 (Manual)	MTB-3	6	L28
M8S6 (7.814/.894 ratio after 4/94)	MTB-4	6	L28
MO35A4	AIS-1	4	L58
MO35S5 (FE Model)	MTB-6	5	L35
MO35S6 (Same as MO35S5 except counter shaft speed is faster)	MTB-11	5	L35
MO36A6 (Aisin model MY600)	AIS-2	6	L69
MO36S5	MTB-10	5	L40
MO36S6	MTB-10	6	L40
MO6OS5 (FK-617 Model)	MTB-9	5	L35
MO6OS6-D (FM-617 Model - 1996)	MTB-7	6	L41
MO6OS6-OD (FM-617 Model - 1997)	MTB-9	6	L35
MO6OS6A	MTB-9	6	L35
MO7OS6-D (FM-657 Model)	MTB-7	6	L41

A443E
A445
MO35A4

LEFT SIDE ONLY

TRANSMISSION GEAR DATA:
L.H. 6-Bolt Opening Gear FORWARD of Centerline
58 Teeth - SPUR

PITCH LINE TO APERTURE FACE:
1.0880" (27.6352MM)

Caution: Application Approval Required for P.T.O. Output Shaft Speeds Above 2500 R.P.M.

LEFT Side P.T.O. Model	Inter. Torq.	Dir. Rot.	Engine % Hi	Engine % Rev	Filler Block	Adapter Assy.	Stud Kit	P.T.O. Model	Inter. Torq.	Dir. Rot.	Engine % Hi	Engine % Rev	Filler Block	Adapter Assy.	Stud Kit
ONE SPEED - TWO GEAR - POWERSHIFT (HYDRAULIC)															
243AGKUP-*5 (1)	85	Opp	140				Furnished								
270AAKUP-*5 (2)	210	Eng	55				Furnished								
270ABKUP-*5 (3)	163	Eng	71				Furnished								
270ADKUP-*5 (4)	139	Eng	82				Furnished								
270AKKUP-*5 (5)	104	Eng	111				Furnished								
270AQKUP-*5 (6)	78	Eng	130				Furnished								

NOTE: When ordering the 270 "A", the hose kit 329246X and metric stud kit 328170-205X is furnished with the P.T.O. The hose kit and metric stud kit are required for completing the 270 Series installation. The 329246X kit supplies hoses for the low pressure lube, high pressure oil, and drain back oil.

NOTE: The torque ratings shown for the 270 Series are based on the maximum allowable torque capacity of the P.T.O. drive gear in the transmission.

NOTE: To mount the 243 Series or 270 Series a revision to the 6 bolt aperture face had to be made so the input gear of the PTO did not interfere with the transmission case. The revised transmission case will have a serial number of 8D3394 or higher.

(1) Input Gear Part No. 5-P-1352
(2) Input Gear Part No. 5-P-1353
(3) Input Gear Part No. 5-P-1354
(4) Input Gear Part No. 5-P-1355
(5) Input Gear Part No. 5-P-1356
(6) Input Gear Part No. 5-P-1359

Parker Hannifin Corporation
Chelsea Products Division
Olive Branch, MS 38654 USA

MY600

MO36A6

LEFT SIDE ONLY

TRANSMISSION GEAR DATA:

L.H. 6-Bolt Opening Gear FORWARD of Centerline

69 Teeth - SPUR

PITCH LINE TO APERTURE FACE:

1.0880" (27.6352MM)

Caution: Application Approval Required for P.T.O. Output Shaft Speeds Above 2500 R.P.M.

ONE SPEED - TWO GEAR - POWERSHIFT (HYDRAULIC)

LEFT Side P.T.O. Model	Inter. Torq.	Dir. Rot.	Engine % Hi	Engine % Rev	Filler Block	Adapter Assy.	Stud Kit
243AGKUP-*5 (1)	65	Opp	167		7-A-032		Furnished
270AAKUP-*5 (2)	167	Eng	65		7-A-032		Furnished
270ABKUP-*5 (3)	129	Eng	85		7-A-032		Furnished
270ADKUP-*5 (4)	112	Eng	98		7-A-032		Furnished
270AKKUP-*5 (5)	82	Eng	132		7-A-032		Furnished
270AQKUP-*5 (6)	78	Eng	155		7-A-032		Furnished

P.T.O. Model	Inter. Torq.	Dir. Rot.	Engine % Hi	Engine % Rev	Filler Block	Adapter Assy.	Stud Kit

NOTE: When ordering the 270 "A", the Hose Kit 329246X and Metric Stud Kit 328170-205X are furnished with the P.T.O. The Hose and Metric Stud Kit are required for completing the 270 Series installation. The 329246X kit supplies the hoses for the low pressure lube, high pressure oil, and drain back oil.

(1) Input Gear Part No. 5-P-1352
(2) Input Gear Part No. 5-P-1353
(3) Input Gear Part No. 5-P-1354
(4) Input Gear Part No. 5-P-1355
(5) Input Gear Part No. 5-P-1356
(6) Input Gear Part No. 5-P-1359

Parker Chelsea

Parker Hannifin Corporation
Chelsea Products Division
Olive Branch, MS 38654 USA

M4	M6S6
M5	
M5S5	
M6	
M6S5	

LEFT SIDE ONLY

TRANSMISSION GEAR DATA:
L.H. 6-Bolt Opening Gear NON-STANDARD of Centerline
37 Teeth - R.H. HELIX

PITCH LINE TO APERTURE FACE:
2.3503" (59.6970MM)

Caution: Application Approval Required for P.T.O. Output Shaft Speeds Above 2500 R.P.M.

LEFT Side P.T.O. Model	Inter. Torq.	Dir. Rot.	Engine % Hi	Engine % Rev	Filler Block	Adapter Assy.	Stud Kit	P.T.O. Model	Inter. Torq.	Dir. Rot.	Engine % Hi	Engine % Rev	Filler Block	Adapter Assy.	Stud Kit
ONE SPEED - SINGLE GEAR - MECHANICAL SHIFT															
100XRAHX-*3 (1)	125	Opp	90			328997X	Furnished								
ONE SPEED - TWO GEAR - MECHANICAL SHIFT															
221XEAHX-*5	250	Eng	46			328997X	Furnished								
221XLAHX-*5	200	Eng	62			328997X	Furnished								
221XPAHX-*5	200	Eng	75			328997X	Furnished								
442XFAHX-*5 (2)	250	Eng	56			328997X	Furnished								
442XHAHX-*5 (3)	250	Eng	65			328997X	Furnished								
442XLAHX-*5 (4)	250	Eng	72			328997X	Furnished								
442XQAHX-*5 (4)	225	Eng	78			328997X	Furnished								
442XRAHX-*5 (4)	225	Eng	90			328997X	Furnished								
442XSAHX-*5 (4)	200	Eng	107			328997X	Furnished								
442XUAHX-*5 (4)	195	Eng	128			328997X	Furnished								
442XWAHX-*5 (4)	175	Eng	150			328997X	Furnished								
442XXAHX-*5 (4)	140	Eng	178			328997X	Furnished								
ONE SPEED - TWO GEAR - POWERSHIFT (AIR)															
236XDAHX-*5 (4)	250	Eng	58			328997X	Furnished								
236XKAHX-*5 (4)	250	Eng	75			328997X	Furnished								
236XQAHX-*5 (4)	250	Eng	101			328997X	Furnished								
236XUAHX-*5 (4)	225	Eng	116			328997X	Furnished								
ONE SPEED - FORWARD & REVERSE															
340XFAHX-*5 (5)	200	Eng	49	51	7-A-140(P)(6)	328997X	Furnished								
352XSAHX-*5 (4)	140	Eng	108	140		328997X	Furnished								
ONE SPEED - DUAL SHAFT															
452XSAHX-*3 (4)	140	Eng	108			328997X	Furnished								

NOTE: Adapter assembly shown is required to convert the non-standard opening to a standard S.A.E. 6-bolt opening.

(1) Gear and Shaft Kit No. KXA-2-P-565
(2) Input Gear Part No. 5-P-1077
(3) Input Gear Part No. 5-P-1364
(4) Input Gear Part No. 5-P-1004
(5) Input Gear Part No. 5-P-581
(6) Filler block furnished with P.T.O.

M8S2X5

LEFT SIDE ONLY

TRANSMISSION GEAR DATA:

L.H. 8-Bolt Opening Gear NON-STANDARD of Centerline

29 Teeth - SPUR

PITCH LINE TO APERTURE FACE:

-1.3711" (-34.8300MM)

Caution: Application Approval Required for P.T.O. Output Shaft Speeds Above 2500 R.P.M.

LEFT Side P.T.O. Model	Inter. Torq.	Dir. Rot.	Engine % Hi	Engine % Rev	Filler Block	Adapter Assy.	Stud Kit	P.T.O. Model	Inter. Torq.	Dir. Rot.	Engine % Hi	Engine % Rev	Filler Block	Adapter Assy.	Stud Kit
ONE SPEED - SINGLE GEAR - MECHANICAL SHIFT															
100XRAHX-*4 (1)	125	Eng	63			329022X	Furnished								
ONE SPEED - TWO GEAR - MECHANICAL SHIFT															
442XFAHX-*6 (2)	250	Opp	39			329022X	Furnished								
442XHAHX-*6 (3)	250	Opp	45			329022X	Furnished								
442XLAHX-*6 (4)	250	Opp	50			329022X	Furnished								
442XQAHX-*6 (4)	225	Opp	54			329022X	Furnished								
442XRAHX-*6 (4)	225	Opp	63			329022X	Furnished								
442XSAHX-*6 (4)	200	Opp	75			329022X	Furnished								
442XUAHX-*6 (4)	195	Opp	89			329022X	Furnished								
442XWAHX-*6 (4)	175	Opp	105			329022X	Furnished								
442XXAHX-*6 (4)	140	Opp	124			329022X	Furnished								
ONE SPEED - TWO GEAR - POWERSHIFT (AIR)															
236XDAHX-*6 (4)	250	Opp	41			329022X	Furnished								
236XKAHX-*6 (4)	250	Opp	52			329022X	Furnished								
236XQAHX-*6 (4)	250	Opp	71			329022X	Furnished								
236XUAHX-*6 (4)	225	Opp	81			329022X	Furnished								
ONE SPEED - FORWARD & REVERSE															
352XSAHX-*6 (4)	140	Opp	76	98		329022X	Furnished								
ONE SPEED - DUAL SHAFT															
452XSAHX-*6 (4)	140	Opp	76			329022X	Furnished								

NOTE: Adapter assembly shown is required to convert the non-standard opening to a standard S.A.E. 6-bolt opening. The negative sign (-) indicates the gear protrudes beyond the aperture face.

NOTE: The P.T.O. speeds shown are with the transmission in high range. For P.T.O. speeds with the transmission in low range, multiply the speeds shown by 1.226.

(1) Gear and Shaft Kit No. KXA-2-P-565
(2) Input Gear Part No. 5-P-1077
(3) Input Gear Part No. 5-P-1364
(4) Input Gear Part No. 5-P-1004

M8S5

M8S6

LEFT SIDE ONLY

TRANSMISSION GEAR DATA:

L.H. 8-Bolt Opening Gear NON-STANDARD of Centerline

28 Teeth - SPUR

PITCH LINE TO APERTURE FACE:

1.2730" (32.3340MM)

Caution: Application Approval Required for P.T.O. Output Shaft Speeds Above 2500 R.P.M.

LEFT Side P.T.O. Model	Inter. Torq.	Dir. Rot.	Engine % Hi	Engine % Rev	Filler Block	Adapter Assy.	Stud Kit	P.T.O. Model	Inter. Torq.	Dir. Rot.	Engine % Hi	Engine % Rev	Filler Block	Adapter Assy.	Stud Kit
ONE SPEED - SINGLE GEAR - MECHANICAL SHIFT															
100XRAHX-*4 (1)	125	Eng	61			329072X	Furnished								
ONE SPEED - TWO GEAR - MECHANICAL SHIFT															
442XFAHX-*6 (2)	250	Opp	38			329072X	Furnished								
442XHAHX-*6 (3)	250	Opp	44			329072X	Furnished								
442XLAHX-*6 (4)	250	Opp	49			329072X	Furnished								
442XQAHX-*6 (4)	225	Opp	53			329072X	Furnished								
442XRAHX-*6 (4)	225	Opp	61			329072X	Furnished								
442XSAHX-*6 (4)	200	Opp	73			329072X	Furnished								
442XUAHX-*6 (4)	195	Opp	87			329072X	Furnished								
442XWAHX-*6 (4)	175	Opp	102			329072X	Furnished								
442XXAHX-*6 (4)	140	Opp	121			329072X	Furnished								
ONE SPEED - TWO GEAR - POWERSHIFT (AIR)															
236XDAHX-*6 (4)	250	Opp	40			329072X	Furnished								
236XKAHX-*6 (4)	250	Opp	51			329072X	Furnished								
236XQAHX-*6 (4)	250	Opp	68			329072X	Furnished								
236XUAHX-*6 (4)	225	Opp	79			329072X	Furnished								
ONE SPEED - FORWARD & REVERSE															
352XSAHX-*6 (4)	140	Opp	74	95		329072X	Furnished								
ONE SPEED - DUAL SHAFT															
452XSAHX-*6 (4)	140	Opp	74			329072X	Furnished								

(1) Gear and Shaft Kit No. KXA-2-P-565
(2) Input Gear Part No. 5-P-1077
(3) Input Gear Part No. 5-P-1364
(4) Input Gear Part No. 5-P-1004

M8S6

LEFT SIDE ONLY

TRANSMISSION GEAR DATA:

L.H. 10-Bolt Opening Gear NON-STANDARD of Centerline

28 Teeth - L.H. HELIX

PITCH LINE TO APERTURE FACE:

1.2930" (32.8422MM)

Caution: Application Approval Required for P.T.O. Output Shaft Speeds Above 2500 R.P.M.

LEFT Side P.T.O. Model	Inter. Torq.	Dir. Rot.	Engine % Hi	Engine % Rev	Filler Block	Adapter Assy.	Stud Kit	P.T.O. Model	Inter. Torq.	Dir. Rot.	Engine % Hi	Engine % Rev	Filler Block	Adapter Assy.	Stud Kit
ONE SPEED - SINGLE GEAR - MECHANICAL SHIFT															
100XRAHX-*4 (1)	125	Eng	61			329211X	Furnished								
ONE SPEED - TWO GEAR - MECHANICAL SHIFT															
442XFAHX-*6 (2)	250	Opp	38			329211X	Furnished								
442XHAHX-*6 (3)	250	Opp	44			329211X	Furnished								
442XLAHX-*6 (4)	250	Opp	49			329211X	Furnished								
442XQAHX-*6 (4)	225	Opp	53			329211X	Furnished								
442XRAHX-*6 (4)	225	Opp	61			329211X	Furnished								
442XSAHX-*6 (4)	200	Opp	73			329211X	Furnished								
442XUAHX-*6 (4)	195	Opp	87			329211X	Furnished								
442XWAHX-*6 (4)	175	Opp	102			329211X	Furnished								
442XXAHX-*6 (4)	140	Opp	121			329211X	Furnished								
ONE SPEED - TWO GEAR - POWERSHIFT (AIR)															
236XDAHX-*6 (4)	250	Opp	40			329211X	Furnished								
236XKAHX-*6 (4)	250	Opp	51			329211X	Furnished								
236XQAHX-*6 (4)	250	Opp	68			329211X	Furnished								
236XUAHX-*6 (4)	225	Opp	79			329211X	Furnished								
ONE SPEED - FORWARD & REVERSE															
352XSAHX-*6 (4)	140	Opp	74	95		329211X	Furnished								
ONE SPEED - DUAL SHAFT															
452XSAHX-*6 (4)	140	Opp	74			329211X	Furnished								

(1) Gear and Shaft Kit No. KXA-2-P-565
(2) Input Gear Part No. 5-P-1077
(3) Input Gear Part No. 5-P-1364
(4) Input Gear Part No. 5-P-1004

M8S2X5

LEFT SIDE ONLY

TRANSMISSION GEAR DATA:

L.H. 10-Bolt Opening Gear NON-STANDARD of Centerline

29 Teeth - L.H. HELIX

PITCH LINE TO APERTURE FACE:

1.3920" (35.3568MM)

Caution: Application Approval Required for P.T.O. Output Shaft Speeds Above 2500 R.P.M.

LEFT Side P.T.O. Model	Inter. Torq.	Dir. Rot.	Engine % Hi	Engine % Rev	Filler Block	Adapter Assy.	Stud Kit	P.T.O. Model	Inter. Torq.	Dir. Rot.	Engine % Hi	Engine % Rev	Filler Block	Adapter Assy.	Stud Kit
ONE SPEED - SINGLE GEAR - MECHANICAL SHIFT															
100XRAHX-*4 (1)	125	Eng	63			329210X	Furnished								
ONE SPEED - TWO GEAR - MECHANICAL SHIFT															
442XFAHX-*6 (2)	250	Opp	39			329210X	Furnished								
442XHAHX-*6 (3)	250	Opp	45			329210X	Furnished								
442XLAHX-*6 (4)	250	Opp	50			329210X	Furnished								
442XQAHX-*6 (4)	225	Opp	54			329210X	Furnished								
442XRAHX-*6 (4)	225	Opp	63			329210X	Furnished								
442XSAHX-*6 (4)	200	Opp	75			329210X	Furnished								
442XUAHX-*6 (4)	195	Opp	89			329210X	Furnished								
442XWAHX-*6 (4)	175	Opp	105			329210X	Furnished								
442XXAHX-*6 (4)	140	Opp	124			329210X	Furnished								
ONE SPEED - TWO GEAR - POWERSHIFT (AIR)															
236XDAHX-*6 (4)	250	Opp	41			329210X	Furnished								
236XKAHX-*6 (4)	250	Opp	52			329210X	Furnished								
236XQAHX-*6 (4)	250	Opp	71			329210X	Furnished								
236XUAHX-*6 (4)	225	Opp	81			329210X	Furnished								
ONE SPEED - FORWARD & REVERSE															
352XSAHX-*6 (4)	140	Opp	76	98		329210X	Furnished								
ONE SPEED - DUAL SHAFT															
452XSAHX-*6 (4)	140	Opp	76			329210X	Furnished								

(1) Gear and Shaft Kit No. KXA-2-P-565
(2) Input Gear Part No. 5-P-1077
(3) Input Gear Part No. 5-P-1364
(4) Input Gear Part No. 5-P-1004

MO35S5

LEFT SIDE ONLY

TRANSMISSION GEAR DATA:

L.H. 6-Bolt Opening Gear REAR of Centerline

35 Teeth - L.H. HELIX

PITCH LINE TO APERTURE FACE:

0.9820" (24.9428MM)

Caution: Application Approval Required for P.T.O. Output Shaft Speeds Above 2500 R.P.M.

LEFT Side P.T.O. Model	Inter. Torq.	Dir. Rot.	Engine % Hi	Engine % Rev	Filler Block	Adapter Assy.	Stud Kit	P.T.O. Model	Inter. Torq.	Dir. Rot.	Engine % Hi	Engine % Rev	Filler Block	Adapter Assy.	Stud Kit
ONE SPEED - TWO GEAR - MECHANICAL SHIFT															
447CXHAX-*4 (1)	140	Eng	57				Furnished								

NOTE: The P.T.O. drive gear in the transmission protudes above the P.T.O. mounting surface by .982".

NOTE: The 6 bolt P.T.O. mounting pad on the transmission is not a standard SAE 6 bolt pad.

(1) Input Gear Part No. 5-P-1220

Parker Hannifin Corporation
Chelsea Products Division
Olive Branch, MS 38654 USA

MO6OS6-D

MO7OS6-D

LEFT SIDE ONLY

TRANSMISSION GEAR DATA:

L.H. 6-Bolt Opening Gear CENTER of Centerline

41 Teeth - R.H. HELIX

PITCH LINE TO APERTURE FACE:

2.3900" (60.7060MM)

Caution: Application Approval Required for P.T.O. Output Shaft Speeds Above 2500 R.P.M.

LEFT Side P.T.O. Model	Inter. Torq.	Dir. Rot.	Engine %		Filler Block	Adapter Assy.	Stud Kit	P.T.O. Model	Inter. Torq.	Dir. Rot.	Engine %		Filler Block	Adapter Assy.	Stud Kit
			Hi	Rev							Hi	Rev			
ONE SPEED - TWO GEAR - MECHANICAL SHIFT															
429GQHBX-*5 (1)	175	Opp	100				Furnished								

NOTE: The 6 bolt opening on this transmission is not a standard SAE 6 bolt pad.

(1) Input Gear Part No. 5-P-1229

Parker Hannifin Corporation
Chelsea Products Division
Olive Branch, MS 38654 USA

MO6OS5
MO6OS6-OD
MO6OS6A

LEFT SIDE ONLY

TRANSMISSION GEAR DATA:
L.H. 6-Bolt Opening Gear FORWARD of Centerline
35 Teeth - R.H. HELIX

PITCH LINE TO APERTURE FACE:
2.5000" (63.5000MM)

Caution: Application Approval Required for P.T.O. Output Shaft Speeds Above 2500 R.P.M.

LEFT Side P.T.O. Model	Inter. Torq.	Dir. Rot.	Engine % Hi	Engine % Rev	Filler Block	Adapter Assy.	Stud Kit	P.T.O. Model	Inter. Torq.	Dir. Rot.	Engine % Hi	Engine % Rev	Filler Block	Adapter Assy.	Stud Kit
ONE SPEED - TWO GEAR - MECHANICAL SHIFT															
429GQHDX-*5 (1)	175	Opp	82				Furnished								

NOTE: The 6 bolt P.T.O. mounting pad on the transmission is not a standard SAE 6 bolt pad.

(1) Input Gear Part No. 5-P-1228

MO36S5

MO36S6

LEFT SIDE ONLY

TRANSMISSION GEAR DATA:

L.H. 6-Bolt Opening Gear REAR of Centerline

40 Teeth - L.H. HELIX

PITCH LINE TO APERTURE FACE:

1.4720" (37.3880MM)

Caution: Application Approval Required for P.T.O. Output Shaft Speeds Above 2500 R.P.M.

LEFT Side P.T.O. Model	Inter. Torq.	Dir. Rot.	Engine % Hi	Engine % Rev	Filler Block	Adapter Assy.	Stud Kit	P.T.O. Model	Inter. Torq.	Dir. Rot.	Engine % Hi	Engine % Rev	Filler Block	Adapter Assy.	Stud Kit
ONE SPEED - TWO GEAR - MECHANICAL SHIFT															
447CXHAX-*4 (1)	140	Eng	72		7-A-500(P)		7170-6X								

NOTE: The 7-A-500 spacer and 7170-6X stud kit does not come with the 447C Series and must be ordered seperately. The spacer is required to go between the P.T.O. and the adapter that is furnished with the P.T.O. and the stud kit is required to mount the P.T.O. thru the spacer to the adapter.

NOTE: The 40 tooth P.T.O. drive gear in the transmission protrodes above the P.T.O. aperature face by 1.472"

NOTE: The 6 bolt pad on this transmission is not a standard S.A.E. 6 bolt mounting pad.

(1) Input Gear Part No. 5-P-1220

Parker Hannifin Corporation
Chelsea Products Division
Olive Branch, MS 38654 USA

MO35S6

LEFT SIDE ONLY

TRANSMISSION GEAR DATA:

L.H. 6-Bolt Opening Gear REAR of Centerline

35 Teeth - L.H. HELIX

PITCH LINE TO APERTURE FACE:

0.9820" (24.9428MM)

Caution: Application Approval Required for P.T.O. Output Shaft Speeds Above 2500 R.P.M.

LEFT Side P.T.O. Model	Inter. Torq.	Dir. Rot.	Engine %		Filler Block	Adapter Assy.	Stud Kit	P.T.O. Model	Inter. Torq.	Dir. Rot.	Engine %		Filler Block	Adapter Assy.	Stud Kit
			Hi	Rev							Hi	Rev			
ONE SPEED - TWO GEAR - MECHANICAL SHIFT															
447CXHAX-*4 (1)	140	Eng	69				Furnished								

NOTE: The P.T.O. drive gear in this transmission protrudes above the P.T.O. aperature face by .982".

NOTE: The 6 bolt mount pad is not a a standard SAE 6 bolt mounting pad.

(1) Input Gear Part No. 5-P-1220

Notes

Parker Hannifin Corporation
Chelsea Products Division
Olive Branch, MS 38654 USA


NEW
PROCESS

⚠ WARNING

FAILURE OR IMPROPER SELECTION OR IMPROPER USE OF THE PRODUCTS AND/OR SYSTEMS DESCRIBED HEREIN OR RELATED ITEMS CAN CAUSE DEATH, PERSONAL INJURY AND PROPERTY DAMAGE.

This document and other information from Parker Hannifin Corporation, its subsidiaries and authorized distributors provide product and/or system options for further investigation by users having technical expertise. It is important that you analyze all aspects of your application and review the information concerning the product or system in the current product catalog. Due to the variety of operating conditions and applications for these products or systems, the user, through its own analysis and testing, is solely responsible for making the final selection of the products and systems and assuring that all performance, safety and warning requirements of the application are met.

The products described herein, including without limitation, product features, specifications, designs, availability and pricing, are subject to change by Parker Hannifin Corporation and its subsidiaries at any time without notice.

Offer of Sale

The items described in this document are hereby offered for sale by Parker Hannifin Corporation, its subsidiaries or its authorized distributors. This offer and its acceptance are governed by the provisions stated in the "Offer of Sale".

© Copyright 2008, Parker Hannifin Corporation, All Rights Reserved

Parker Hannifin Corporation
Chelsea Products Division
Olive Branch, MS 38654 USA

Transmission Make and Model	P.T.O. Appl. Number	Number Forward Speeds	Teeth in P.T.O. Driver
NP-203 (Transfer Case)	NPG-20	2	L32-R32
441-RTJ	NPG-6	5	L23-R19
541	NPG-5	5	L23-R20
541-12	NPG-6	5	L23-R19
541-15	NPG-6	5	L23-R19
541-16	NPG-6	5	L23-R19
541-C	NPG-5	5	L23-R20
541-CL	NPG-7	5	L23-R20
541-DD12	NPG-6	5	L23-R19
541-DD12A	NPG-6	5	L23-R19
541-DD13	NPG-5	5	L23-R20
541-DD14	NPG-5	5	L23-R20
541-DD15	NPG-6	5	L23-R19
541-DD15A	NPG-6	5	L23-R19
541-DD16	NPG-6	5	L23-R19
541-DD16A	NPG-6	5	L23-R19
541-DD17	NPG-6	5	L23-R19
541-DD17A	NPG-6	5	L23-R19
541-DD17B	NPG-6	5	L23-R19
541-DD18	NPG-6	5	L23-R19
541-DD18A	NPG-6	5	L23-R19
541-DD22B	NPG-6	5	L23-R19
541-DD23B	NPG-6	5	L23-R19
541-DG21	NPG-5	5	L23-R20
541-FD1	NPG-5	5	L23-R20
541-FD2	NPG-5	5	L23-R20
541-FD23B	NPG-7	5	L23-R20
541-FL1	NPG-6	5	L23-R19
541-FL2	NPG-6	5	L23-R19
541-FO1	NPG-5	5	L23-R20
541-FO2	NPG-5	5	L23-R20
541-GD11	NPG-5	5	L23-R20
541-GD22	NPG-5	5	L23-R20
541-GD23	NPG-7	5	L23-R20
541-GD24	NPG-7	5	L23-R20
541-GD24B	NPG-7	5	L23-R20

IMPORTANT: See Safety Information in Section I of the Chelsea Applications catalog HY25-3000/US.

Transmission P.T.O. Driver & Aperatures (Viewed from Rear of Transmission)

L-Left Side R-Right Side B-Bottom Side T-Top Side

For transmission not listed, contact your authorized Chelsea Distributor.

January 2008

Parker Hannifin Corporation
Chelsea Products Division
Olive Branch, MS 38654 USA

NEW PROCESS TRANSMISSION INDEX

Transmission Make and Model	P.T.O. Appl. Number	Number Forward Speeds	Teeth in P.T.O. Driver
541-GD25	NPG-7	5	L23-R20
541-GL	NPG-7	5	L23-R20
541-GO	NPG-5	5	L23-R20
542-CD	NPG-5	5	L23-R20
542-CL	NPG-7	5	L23-R20
542-CO	NPG-5	5	L23-R20
542-DD	NPG-5	5	L23-R20
542-DL	NPG-6	5	L23-R19
542-DO	NPG-5	5	L23-R20
542-FD	NPG-5	5	L23-R20
542-FL	NPG-6	5	L23-R19
542-FO	NPG-5	5	L23-R20
542-GD	NPG-5	5	L23-R20
542-GL	NPG-7	5	L23-R20
542-GO	NPG-5	5	L23-R20

IMPORTANT: See Safety Information in Section 1 of the Chelsea Applications catalog HY25-3000/US.

Transmission P.T.O. Driver & Aperatures (Viewed from Rear of Transmission)

L-Left Side R-Right Side B-Bottom Side T-Top Side

For transmission not listed, contact your authorized Chelsea Distributor.

January 2008

Parker Hannifin Corporation
Chelsea Products Division
Olive Branch, MS 38654 USA

541	541-FD1	541-GD22	542-DO
541-C	541-FD2	541-GO	542-FD
541-DD13	541-FO1	542-CD	542-FO
541-DD14	541-FO2	542-CO	542-GD
541-DG21	541-GD11	542-DD	542-GO

LEFT SIDE ONLY

TRANSMISSION GEAR DATA:
L.H. 6-Bolt Opening Gear FORWARD of Centerline
23 Teeth - SPUR

PITCH LINE TO APERTURE FACE:
1.0750" (27.3100MM)

RIGHT SIDE ONLY

TRANSMISSION GEAR DATA:
R.H. 6-Bolt Opening Gear FORWARD of Centerline
20 Teeth - HELIX

PITCH LINE TO APERTURE FACE:
.9390" (23.8500MM)

Caution: Application Approval Required for P.T.O. Output Shaft Speeds Above 2500 R.P.M.

LEFT Side P.T.O. Model	Inter. Torq.	Dir. Rot.	Engine % Hi	Engine % Rev	Filler Block	Adapter Assy.	Stud Kit	RIGHT Side P.T.O. Model	Inter. Torq.	Dir. Rot.	Engine % Hi	Engine % Rev	Filler Block	Adapter Assy.	Stud Kit
ONE SPEED - SINGLE GEAR - MECHANICAL SHIFT															
100XRAHX-*3 (1)	125	Opp	42				Furnished	100XRAWX-*3 (2)	125	Eng	45		7-A-187		8000-4X
ONE SPEED - TWO GEAR - MECHANICAL SHIFT															
221XCAHX-*5	250	Eng	19		7-A-032 (3)		Furnished	442KLAWX-*3 (4)	250	Opp	33		7-A-187		7170-4X
221XEAHX-*5	250	Eng	21				Furnished	442KQAWX-*3 (4)	225	Opp	36		7-A-187		7170-4X
221XLAHX-*5	200	Eng	29				Furnished	442KRAWX-*3 (4)	225	Opp	42		7-A-187		7170-4X
221XPAHX-*5	200	Eng	35				Furnished	442KSAWX-*3 (4)	200	Opp	50		7-A-187		7170-4X
442XBAHX-*5 (5)	250	Eng	16				Furnished	442KUAWX-*3 (4)	195	Opp	59		7-A-187		7170-4X
442XFAHX-*5 (6)	250	Eng	26				Furnished	442KWAWX-*3 (4)	175	Opp	70		7-A-187		7170-4X
442XHAHX-*5 (7)	250	Eng	30				Furnished	442KXAWX-*3 (4)	140	Opp	82		7-A-187		7170-4X
442XLAHX-*5 (8)	250	Eng	33				Furnished								
442XQAHX-*5 (8)	225	Eng	36				Furnished								
442XRAHX-*5 (8)	225	Eng	42				Furnished								
442XSAHX-*5 (8)	200	Eng	50				Furnished								
442XUAHX-*5 (8)	195	Eng	59				Furnished								
442XWAHX-*5 (8)	175	Eng	70				Furnished								
442XXAHX-*5 (8)	140	Eng	82				Furnished								
ONE SPEED - TWO GEAR - POWERSHIFT (AIR)															
236XDAHX-*5 (8)	250	Eng	27				Furnished								
236XKAHX-*5 (8)	250	Eng	35				Furnished								
236XQAHX-*5 (8)	250	Eng	47				Furnished								
236XUAHX-*5 (8)	225	Eng	53				Furnished								
ONE SPEED - FORWARD & REVERSE															
340XFAHX-*5 (9)	200	Eng	23	24	7-A-140 (3)		Furnished	352XSAWX-*3 (4)	140	Opp	50	65	7-A-187		7170-4X
352XSAHX-*5 (8)	140	Eng	50	65			Furnished								
ONE SPEED - DUAL SHAFT															
452XSAHX-*3 (8)	140	Eng	50				Furnished	452XSAWX-*3 (4)	140	Opp	50		7-A-187		7170-4X
GEARED ADAPTERS															
626XAHX-4AH							Furnished	626KAWX-3GZ					7-A-187		7170-4X
630XAHX-4AH							Furnished	630KAWX-3GZ					7-A-187		7170-4X
645XAHX-4AH							Furnished	645KAWX-3GZ					7-A-187		7170-4X

CAUTION: Do Not Use a Geared Adapter with the 442XBAH Ratio. Final P.T.O. Output Shaft Rotation Must be "Engine".

(1) Gear and Shaft Kit No. KXA-2-P-565
(2) Gear and Shaft Kit No. KXA-2-P-566
(3) Filler block furnished with P.T.O.
(4) Input Gear Part No. 5-P-1009
(5) Input Gear Part No. 5-P-1418
(6) Input Gear Part No. 5-P-1077
(7) Input Gear Part No. 5-P-1364
(8) Input Gear Part No. 5-P-1004
(9) Input Gear Part No. 5-P-581

441-RTJ	541-DD12A	541-DD17	541-DD22B	542-FL
541-12	541-DD15	541-DD17A	541-DD23B	
541-15	541-DD15A	541-DD17B	541-FL1	
541-16	541-DD16	541-DD18	541-FL2	
541-DD12	541-DD16A	541-DD18A	542-DL	

LEFT SIDE ONLY

TRANSMISSION GEAR DATA:
L.H. 6-Bolt Opening Gear FORWARD of Centerline
23 Teeth - SPUR
PITCH LINE TO APERTURE FACE:
1.0750" (27.3100MM)

RIGHT SIDE ONLY

TRANSMISSION GEAR DATA:
R.H. 6-Bolt Opening Gear FORWARD of Centerline
19 Teeth - HELIX
PITCH LINE TO APERTURE FACE:
1.0500" (26.6700MM)

Caution: Application Approval Required for P.T.O. Output Shaft Speeds Above 2500 R.P.M.

LEFT Side P.T.O. Model	Inter. Torq.	Dir. Rot.	Engine % Hi	Engine % Rev	Filler Block	Adapter Assy.	Stud Kit	RIGHT Side P.T.O. Model	Inter. Torq.	Dir. Rot.	Engine % Hi	Engine % Rev	Filler Block	Adapter Assy.	Stud Kit
ONE SPEED - SINGLE GEAR - MECHANICAL SHIFT															
100XRAHX-*3 (1)	125	Opp	35				Furnished	100XRAWX-*3 (2)	125	Eng	37				Furnished
ONE SPEED - TWO GEAR - MECHANICAL SHIFT															
221XCAHX-*5	250	Eng	16		7-A-032 (3)		Furnished	442XLAWX-*3 (8)	250	Opp	27		7-A-062		Furnished
221XEAHX-*5	250	Eng	18				Furnished	442XQAWX-*3 (8)	225	Opp	29		7-A-062		Furnished
221XLAHX-*5	200	Eng	24				Furnished	442XRAWX-*3 (8)	225	Opp	34		7-A-062		Furnished
221XPAHX-*5	200	Eng	30				Furnished	442XSAWX-*3 (8)	200	Opp	40		7-A-062		Furnished
442XBAHX-*5 (4)	250	Eng	14				Furnished	442XUAWX-*3 (8)	195	Opp	48		7-A-062		Furnished
442XFAHX-*5 (5)	250	Eng	22				Furnished	442XWAWX-*3 (8)	175	Opp	56		7-A-062		Furnished
442XHAHX-*5 (6)	250	Eng	26				Furnished	442XXAWX-*3 (8)	140	Opp	66		7-A-062		Furnished
442XLAHX-*5 (7)	250	Eng	28				Furnished								
442XQAHX-*5 (7)	225	Eng	31				Furnished								
442XRAHX-*5 (7)	225	Eng	35				Furnished								
442XSAHX-*5 (7)	200	Eng	42				Furnished								
442XUAHX-*5 (7)	195	Eng	50				Furnished								
442XWAHX-*5 (7)	175	Eng	59				Furnished								
442XXAHX-*5 (7)	140	Eng	70				Furnished								
ONE SPEED - TWO GEAR - POWERSHIFT (AIR)															
236XDAHX-*5 (7)	250	Eng	23				Furnished								
236XKAHX-*5 (7)	250	Eng	29				Furnished								
236XQAHX-*5 (7)	250	Eng	40				Furnished								
236XUAHX-*5 (7)	225	Eng	46				Furnished								
ONE SPEED - FORWARD & REVERSE															
340XFAHX-*5 (9)	200	Eng	19	20	7-A-140 (3)		Furnished	352XSAWX-*3 (8)	140	Opp	41	52	7-A-062		Furnished
352XSAHX-*5 (7)	140	Eng	43	55			Furnished								
ONE SPEED - DUAL SHAFT															
452XSAHX-*3 (7)	140	Eng	43				Furnished	452XSAWX-*3 (8)	140	Opp	41		7-A-062		Furnished
GEARED ADAPTERS															
626XAHX-4AH							Furnished	626XAWX-3GZ		Eng			7-A-062		Furnished
630XAHX-4AH							Furnished	630XAWX-3GZ		Eng			7-A-062		Furnished
645XAHX-4AH							Furnished	645XAWX-3GZ		Eng			7-A-062		Furnished

CAUTION: Do Not Use a Geared Adapter with the 442XBAH Ratio. Final P.T.O. Output Shaft Rotation Must be "Engine".

(1) Gear and Shaft Kit No. KXA-2-P-565
(2) Gear and Shaft Kit No. KXA-2-P-566
(3) Filler block furnished with P.T.O.
(4) Input Gear Part No. 5-P-1418
(5) Input Gear Part No. 5-P-1077
(6) Input Gear Part No. 5-P-1364
(7) Input Gear Part No. 5-P-1004
(8) Input Gear Part No. 5-P-1009
(9) Input Gear Part No. 5-P-581

541-CL	541-GD25
541-FD23B	541-GL
541-GD23	542-CL
541-GD24	542-GL
541-GD24B	

LEFT SIDE ONLY

TRANSMISSION GEAR DATA:
L.H. 6-Bolt Opening Gear FORWARD of Centerline
23 Teeth - SPUR
PITCH LINE TO APERTURE FACE:
1.0750" (27.3100MM)

RIGHT SIDE ONLY

TRANSMISSION GEAR DATA:
R.H. 6-Bolt Opening Gear FORWARD of Centerline
20 Teeth - HELIX
PITCH LINE TO APERTURE FACE:
.9390" (23.8500MM)

Caution: Application Approval Required for P.T.O. Output Shaft Speeds Above 2500 R.P.M.

LEFT Side P.T.O. Model	Inter. Torq.	Dir. Rot.	Engine % Hi	Engine % Rev	Filler Block	Adapter Assy.	Stud Kit	RIGHT Side P.T.O. Model	Inter. Torq.	Dir. Rot.	Engine % Hi	Engine % Rev	Filler Block	Adapter Assy.	Stud Kit
ONE SPEED - SINGLE GEAR - MECHANICAL SHIFT															
100XRAHX-*3 (1)	125	Opp	35				Furnished	100XRAWX-*3 (2)	125	Eng	39		7-A-187		8000-4X
ONE SPEED - TWO GEAR - MECHANICAL SHIFT															
221XCAHX-*5	250	Eng	16		7-A-032 (3)		Furnished	442KLAWX-*3 (4)	250	Opp	28		7-A-187		7170-4X
221XEAHX-*5	250	Eng	18				Furnished	442KQAWX-*3 (4)	225	Opp	31		7-A-187		7170-4X
221XLAHX-*5	200	Eng	24				Furnished	442KRAWX-*3 (4)	225	Opp	35		7-A-187		7170-4X
221XPAHX-*5	200	Eng	30				Furnished	442KSAWX-*3 (4)	200	Opp	42		7-A-187		7170-4X
442XBAHX-*5 (5)	250	Eng	14				Furnished	442KUAWX-*3 (4)	195	Opp	50		7-A-187		7170-4X
442XFAHX-*5 (6)	250	Eng	22				Furnished	442KWAWX-*3 (4)	175	Opp	59		7-A-187		7170-4X
442XHAHX-*5 (7)	250	Eng	26				Furnished	442KXAWX-*3 (4)	140	Opp	70		7-A-187		7170-4X
442XLAHX-*5 (8)	250	Eng	28				Furnished								
442XQAHX-*5 (8)	225	Eng	31				Furnished								
442XRAHX-*5 (8)	225	Eng	35				Furnished								
442XSAHX-*5 (8)	200	Eng	42				Furnished								
442XUAHX-*5 (8)	195	Eng	50				Furnished								
442XWAHX-*5 (8)	175	Eng	59				Furnished								
442XXAHX-*5 (8)	140	Eng	70				Furnished								
ONE SPEED - TWO GEAR - POWERSHIFT (AIR)															
236XDAHX-*5 (8)	250	Eng	23				Furnished								
236XKAHX-*5 (8)	250	Eng	29				Furnished								
236XQAHX-*5 (8)	250	Eng	40				Furnished								
236XUAHX-*5 (8)	225	Eng	46				Furnished								
ONE SPEED - FORWARD & REVERSE															
340XFAHX-*5 (9)	200	Eng	19	20	7-A-140 (3)		Furnished	352XSAWX-*3 (4)	140	Opp	43	55	7-A-187		7170-4X
352XSAHX-*5 (8)	140	Eng	43	55			Furnished								
ONE SPEED - DUAL SHAFT															
452XSAHX-*3 (8)	140	Eng	43				Furnished	452XSAWX-*3 (4)	140	Opp	43		7-A-187		7170-4X
GEARED ADAPTERS															
626XAHX-4AH							Furnished	626KAWX-3GZ					7-A-187		7170-4X
630XAHX-4AH							Furnished	630KAWX-3GZ					7-A-187		7170-4X
645XAHX-4AH							Furnished	645KAWX-3GZ					7-A-187		7170-4X

CAUTION: Do Not Use a Geared Adapter with the 442XBAH Ratio. Final P.T.O. Output Shaft Rotation Must be "Engine".

(1) Gear and Shaft Kit No. KXA-2-P-565
(2) Gear and Shaft Kit No. KXA-2-P-566
(3) Filler block furnished with P.T.O.
(4) Input Gear Part No. 5-P-1009
(5) Input Gear Part No. 5-P-1418
(6) Input Gear Part No. 5-P-1077
(7) Input Gear Part No. 5-P-1364
(8) Input Gear Part No. 5-P-1004
(9) Input Gear Part No. 5-P-581

Parker Chelsea
Parker Hannifin Corporation
Chelsea Products Division
Olive Branch, MS 38654 USA

NP-203

LEFT SIDE ONLY	RIGHT SIDE ONLY
TRANSMISSION GEAR DATA: L.H. 6-Bolt Opening Gear FORWARD of Centerline 32 Teeth - R.H. HELIX **PITCH LINE TO APERTURE FACE:** 1.0850" (27.5600MM)	**TRANSMISSION GEAR DATA:** R.H. 6-Bolt Opening Gear FORWARD of Centerline 32 Teeth - R.H. HELIX **PITCH LINE TO APERTURE FACE:** 1.0850" (27.5600MM)

Caution: Application Approval Required for P.T.O. Output Shaft Speeds Above 2500 R.P.M.

LEFT Side P.T.O. Model	Inter. Torq.	Dir. Rot.	Engine % Hi	Engine % Rev	Filler Block	Adapter Assy.	Stud Kit	RIGHT Side P.T.O. Model	Inter. Torq.	Dir. Rot.	Engine % Hi	Engine % Rev	Filler Block	Adapter Assy.	Stud Kit
ONE SPEED - SINGLE GEAR - MECHANICAL SHIFT															
100XRBKX-*3 (1)	125	Eng	121				Furnished	100XRBKX-*3 (1)	125	Eng	121				Furnished
ONE SPEED - TWO GEAR - MECHANICAL SHIFT															
442XLBKX-*3 (2)	250	Opp	93				Furnished	442XLBKX-*3 (2)	250	Opp	93				Furnished
442XQBKX-*3 (2)	225	Opp	100				Furnished	442XQBKX-*3 (2)	225	Opp	100				Furnished
442XRBKX-*3 (2)	225	Opp	116				Furnished	442XRBKX-*3 (2)	225	Opp	116				Furnished
442XSBKX-*3 (2)	200	Opp	138				Furnished	442XSBKX-*3 (2)	200	Opp	138				Furnished
442XUBKX-*3 (2)	195	Opp	164				Furnished	442XUBKX-*3 (2)	195	Opp	164				Furnished
442XWBKX-*3 (2)	175	Opp	193				Furnished	442XWBKX-*3 (2)	175	Opp	193				Furnished
442XXBKX-*3 (2)	140	Opp	228				Furnished	442XXBKX-*3 (2)	140	Opp	228				Furnished

NOTE: 203 Model is available with aperture on right or left side. However, all models will have only one (1) opening. Chevrolet Blazer has L.H. Opening.

NOTE: Speeds shown are with main transmission in direct drive. Reverse and all ratios of transmission are available through P.T.O. by shifting of main transmission.

(1) Gear and Shaft Kit No. KXA-2-P-574
(2) Input Gear Part No. 5-P-1018

Parker Hannifin Corporation
Chelsea Products Division
Olive Branch, MS 38654 USA

NEW VENTURE

⚠ WARNING

FAILURE OR IMPROPER SELECTION OR IMPROPER USE OF THE PRODUCTS AND/OR SYSTEMS DESCRIBED HEREIN OR RELATED ITEMS CAN CAUSE DEATH, PERSONAL INJURY AND PROPERTY DAMAGE.

This document and other information from Parker Hannifin Corporation, its subsidiaries and authorized distributors provide product and/or system options for further investigation by users having technical expertise. It is important that you analyze all aspects of your application and review the information concerning the product or system in the current product catalog. Due to the variety of operating conditions and applications for these products or systems, the user, through its own analysis and testing, is solely responsible for making the final selection of the products and systems and assuring that all performance, safety and warning requirements of the application are met.

The products described herein, including without limitation, product features, specifications, designs, availability and pricing, are subject to change by Parker Hannifin Corporation and its subsidiaries at any time without notice.

Offer of Sale

The items described in this document are hereby offered for sale by Parker Hannifin Corporation, its subsidiaries or its authorized distributors. This offer and its acceptance are governed by the provisions stated in the "Offer of Sale".

© Copyright 2008, Parker Hannifin Corporation, All Rights Reserved

Parker Hannifin Corporation
Chelsea Products Division
Olive Branch, MS 38654 USA

Transmission Make and Model	P.T.O. Appl. Number	Number Forward Speeds	Teeth in P.T.O. Driver
NV-021 (Dodge - Auto with P.T.O. provision)	NVG-4		R38
241HD	NVG-3	2	R38
4500 (CHEV.-GMC)(1991 TO FEB.15,1994)	NVG-1	5	L32-R32
4500 (DODGE)(CHEV/GMC-AFTER FEB.15,1994)	NVG-2	5	L30-R30

IMPORTANT: See Safety Information in Section I of the Chelsea Applications catalog HY25-3000/US.

Transmission P.T.O. Driver & Aperatures (Viewed from Rear of Transmission)

L-Left Side R-Right Side B-Bottom Side T-Top Side

For transmission not listed, contact your authorized Chelsea Distributor.

January 2008

Parker Hannifin Corporation
Chelsea Products Division
Olive Branch, MS 38654 USA

NVG-4500

4500

LEFT SIDE ONLY	RIGHT SIDE ONLY
TRANSMISSION GEAR DATA: L.H. 6-Bolt Opening Gear FORWARD of Centerline 32 Teeth - R.H. HELIX **PITCH LINE TO APERTURE FACE:** 1.0110" (25.6794MM)	**TRANSMISSION GEAR DATA:** R.H. 6-Bolt Opening Gear FORWARD of Centerline 32 Teeth - R.H. HELIX **PITCH LINE TO APERTURE FACE:** 1.0110" (25.6794MM)

Caution: Application Approval Required for P.T.O. Output Shaft Speeds Above 2500 R.P.M.

LEFT Side P.T.O. Model	Inter. Torq.	Dir. Rot.	Engine % Hi	Engine % Rev	Filler Block	Adapter Assy.	Stud Kit	RIGHT Side P.T.O. Model	Inter. Torq.	Dir. Rot.	Engine % Hi	Engine % Rev	Filler Block	Adapter Assy.	Stud Kit
ONE SPEED - TWO GEAR - MECHANICAL SHIFT															
442XLFBX-*5 (1)	250	Opp	48				Furnished	442XLFBX-*3 (1)	250	Opp	48				Furnished
442XQFBX-*5 (1)	225	Opp	52				Furnished	442XQFBX-*3 (1)	225	Opp	52				Furnished
442XRFBX-*5 (1)	225	Opp	60				Furnished	442XRFBX-*3 (1)	225	Opp	60				Furnished
442XSFBX-*5 (1)	200	Opp	72				Furnished	442XSFBX-*3 (1)	200	Opp	72				Furnished
442XUFBX-*5 (1)	195	Opp	85				Furnished	442XUFBX-*3 (1)	195	Opp	85				Furnished
442XWFBX-*5 (1)	175	Opp	100				Furnished	442XWFBX-*3 (1)	175	Opp	100				Furnished
442XXFBX-*5 (1)	140	Opp	119				Furnished	442XXFBX-*3 (1)	140	Opp	119				Furnished
ONE SPEED - FORWARD & REVERSE															
352XSFBX-*5 (1)	140	Opp	73	94			Furnished	352XSFBX-*3 (1)	140	Opp	73	94			Furnished
ONE SPEED - DUAL SHAFT															
452XSFBX-*3 (1)	140	Opp	73				Furnished	452XSFBX-*3 (1)	140	Opp	73				Furnished

NOTE: No adapters available for this application.

NOTE: The 100 series is not released for this transmission because there is no tooth round on the P.T.O. drive gear.

(1) Input Gear Part No. 5-P-1063

NVG-4500

4500

LEFT SIDE ONLY

TRANSMISSION GEAR DATA:

L.H. 6-Bolt Opening Gear FORWARD of Centerline

30 Teeth - R.H. HELIX

PITCH LINE TO APERTURE FACE:

1.1200" (30.4800MM)

RIGHT SIDE ONLY

TRANSMISSION GEAR DATA:

R.H. 6-Bolt Opening Gear FORWARD of Centerline

30 Teeth - R.H. HELIX

PITCH LINE TO APERTURE FACE:

1.1200" (30.4800MM)

Caution: Application Approval Required for P.T.O. Output Shaft Speeds Above 2500 R.P.M.

LEFT Side P.T.O. Model	Inter. Torq.	Dir. Rot.	Engine % Hi	Engine % Rev	Filler Block	Adapter Assy.	Stud Kit	RIGHT Side P.T.O. Model	Inter. Torq.	Dir. Rot.	Engine % Hi	Engine % Rev	Filler Block	Adapter Assy.	Stud Kit
ONE SPEED - TWO GEAR - MECHANICAL SHIFT															
442XLFCX-*5 (1)	250	Opp	49				Furnished	442XLFCX-*3 (1)	250	Opp	49				Furnished
442XQFCX-*5 (1)	225	Opp	53				Furnished	442XQFCX-*3 (1)	225	Opp	53				Furnished
442XRFCX-*5 (1)	225	Opp	61				Furnished	442XRFCX-*3 (1)	225	Opp	61				Furnished
442XSFCX-*5 (1)	200	Opp	73				Furnished	442XSFCX-*3 (1)	200	Opp	73				Furnished
442XUFCX-*5 (1)	195	Opp	87				Furnished	442XUFCX-*3 (1)	195	Opp	87				Furnished
442XWFCX-*5 (1)	175	Opp	102				Furnished	442XWFCX-*3 (1)	175	Opp	102				Furnished
442XXFCX-*5 (1)	140	Opp	121				Furnished	442XXFCX-*3 (1)	140	Opp	121				Furnished
ONE SPEED - FORWARD & REVERSE															
352XSFCX-*5 (1)	140	Opp	74	96			Furnished	352XSFCX-*3 (1)	140	Opp	74	96			Furnished
ONE SPEED - DUAL SHAFT															
452XSFCX-*3 (1)	140	Opp	74				Furnished	452XSFCX-*3 (1)	140	Opp	74				Furnished

NOTE: The 100 series is not released for this transmission because there is no tooth round on the P.T.O. drive gear.

(1) Input Gear Part No. 5-P-1064

Parker Chelsea

Parker Hannifin Corporation
Chelsea Products Division
Olive Branch, MS 38654 USA

241HD

RIGHT SIDE ONLY

TRANSMISSION GEAR DATA:
R.H. 6-Bolt Opening Gear FORWARD of Centerline
38 Teeth - SPUR

PITCH LINE TO APERTURE FACE:
1.0630" (27.0002MM)

Caution: Application Approval Required for P.T.O. Output Shaft Speeds Above 2500 R.P.M.

P.T.O. Model	Inter. Torq.	Dir. Rot.	Engine % Hi	Engine % Rev	Filler Block	Adapter Assy.	Stud Kit	RIGHT Side P.T.O. Model	Inter. Torq.	Dir. Rot.	Engine % Hi	Engine % Rev	Filler Block	Adapter Assy.	Stud Kit
ONE SPEED - SINGLE GEAR - MECHANICAL SHIFT															
								100XRAHX-*3 (1)	125	Opp	58		7-A-032		Furnished
ONE SPEED - TWO GEAR - MECHANICAL SHIFT															
								442XFAHX-*3 (2)	250	Eng	36		7-A-032		Furnished
								442XHAHX-*3 (3)	250	Eng	42		7-A-032		Furnished
								442XLAHX-*3 (4)	250	Eng	47		7-A-032		Furnished
								442XQAHX-*3 (4)	225	Eng	50		7-A-032		Furnished
								442XRAHX-*3 (4)	225	Eng	58		7-A-032		Furnished
								442XSAHX-*3 (4)	200	Eng	69		7-A-032		Furnished
								442XUAHX-*3 (4)	195	Eng	82		7-A-032		Furnished
								442XWAHX-*3 (4)	175	Eng	97		7-A-032		Furnished
								442XXAHX-*3 (4)	140	Eng	115		7-A-032		Furnished
ONE SPEED - TWO GEAR - POWERSHIFT (AIR)															
								236XDAHX-*3 (4)	250	Eng	38		7-A-032		Furnished
								236XKAHX-*3 (4)	250	Eng	48		7-A-032		Furnished
								236XQAHX-*3 (4)	250	Eng	65		7-A-032		Furnished
								236XUAHX-*3 (4)	225	Eng	75		7-A-032		Furnished
ONE SPEED - FORWARD & REVERSE															
								340XFAHX-*5 (5)	200	Eng	31	33	7-A-140 (6)		Furnished
								352XSAHX-*3 (4)	140	Eng	70	91	7-A-032		Furnished
GEARED ADAPTERS															
								626XAHX-3AH							Furnished
								630XAHX-3AH							Furnished
								645XAHX-3AH							Furnished

NOTE: You may notice some interference when using a transfer case housing along with the 100 Series P.T.O. Instead use an adapter or go to a 442 Series P.T.O.

(1) Gear and Shaft Kit No. KXA-2-P-565
(2) Input Gear Part No. 5-P-1077
(3) Input Gear Part No. 5-P-1364
(4) Input Gear Part No. 5-P-1004
(5) Input Gear Part No. 5-P-581
(6) Filler block furnished with P.T.O.

Parker Hannifin Corporation
Chelsea Products Division
Olive Branch, MS 38654 USA

NV-021

RIGHT SIDE ONLY

TRANSMISSION GEAR DATA:
R.H. 6-Bolt Opening Gear FORWARD of Centerline
38 Teeth - SPUR

PITCH LINE TO APERTURE FACE:
1.0630" (27.0002MM)

Caution: Application Approval Required for P.T.O. Output Shaft Speeds Above 2500 R.P.M.

P.T.O. Model	Inter. Torq.	Dir. Rot.	Engine % Hi	Engine % Rev	Filler Block	Adapter Assy.	Stud Kit	RIGHT Side P.T.O. Model	Inter. Torq.	Dir. Rot.	Engine % Hi	Engine % Rev	Filler Block	Adapter Assy.	Stud Kit
ONE SPEED - SINGLE GEAR - MECHANICAL SHIFT															
								100XRAHX-*3 (1)	125	Opp	158		7-A-032		Furnished
ONE SPEED - TWO GEAR - MECHANICAL SHIFT															
								221XCAHX-*3	250	Eng	71		7-A-032 (2)		Furnished
								221XEAHX-*3	250	Eng	81		7-A-032		Furnished
								221XLAHX-*3	200	Eng	109		7-A-032		Furnished
								221XPAHX-*3	200	Eng	132		7-A-032		Furnished
								442XFAHX-*3 (3)	250	Eng	98		7-A-032		Furnished
								442XHAHX-*3 (4)	250	Eng	114		7-A-032		Furnished
								442XLAHX-*3 (5)	250	Eng	127		7-A-032		Furnished
								442XQAHX-*3 (5)	225	Eng	137		7-A-032		Furnished
								442XRAHX-*3 (5)	225	Eng	158		7-A-032		Furnished
								442XSAHX-*3 (5)	200	Eng	188		7-A-032		Furnished
								442XUAHX-*3 (5)	195	Eng	225		7-A-032		Furnished
								442XWAHX-*3 (5)	175	Eng	264		7-A-032		Furnished
								442XXAHX-*3 (5)	140	Eng	313		7-A-032		Furnished
ONE SPEED - TWO GEAR - POWERSHIFT (AIR)															
								236XDAHX-*3 (5)	250	Eng	103		7-A-032		Furnished
								236XKAHX-*3 (5)	250	Eng	131		7-A-032		Furnished
								236XQAHX-*3 (5)	250	Eng	177		7-A-032		Furnished
								236XUAHX-*3 (5)	225	Eng	204		7-A-032		Furnished
ONE SPEED - FORWARD & REVERSE															
								340XFAHX-*3 (6)	200	Eng	86	90	7-A-140 (2)		Furnished
								352XSAHX-*3 (5)	140	Eng	191	247	7-A-032		Furnished
GEARED ADAPTERS															
								626XAHX-3AH					7-A-032		Furnished
								630XAHX-3AH					7-A-032		Furnished
								645XAHX-3AH					7-A-032		Furnished

(1) Gear and Shaft Kit No. KXA-2-P-565
(2) Filler block furnished with P.T.O.
(3) Input Gear Part No. 5-P-1077
(4) Input Gear Part No. 5-P-1364
(5) Input Gear Part No. 5-P-1004
(6) Input Gear Part No. 5-P-581

Parker Chelsea

Parker Hannifin Corporation
Chelsea Products Division
Olive Branch, MS 38654 USA

Notes

Parker Hannifin Corporation
Chelsea Products Division
Olive Branch, MS 38654 USA



NISSAN

⚠ WARNING

FAILURE OR IMPROPER SELECTION OR IMPROPER USE OF THE PRODUCTS AND/OR SYSTEMS DESCRIBED HEREIN OR RELATED ITEMS CAN CAUSE DEATH, PERSONAL INJURY AND PROPERTY DAMAGE.

This document and other information from Parker Hannifin Corporation, its subsidiaries and authorized distributors provide product and/or system options for further investigation by users having technical expertise. It is important that you analyze all aspects of your application and review the information concerning the product or system in the current product catalog. Due to the variety of operating conditions and applications for these products or systems, the user, through its own analysis and testing, is solely responsible for making the final selection of the products and systems and assuring that all performance, safety and warning requirements of the application are met.

The products described herein, including without limitation, product features, specifications, designs, availability and pricing, are subject to change by Parker Hannifin Corporation and its subsidiaries at any time without notice.

Offer of Sale

The items described in this document are hereby offered for sale by Parker Hannifin Corporation, its subsidiaries or its authorized distributors. This offer and its acceptance are governed by the provisions stated in the "Offer of Sale".

© Copyright 2008, Parker Hannifin Corporation, All Rights Reserved

Parker Hannifin Corporation
Chelsea Products Division
Olive Branch, MS 38654 USA

Transmission Make and Model	P.T.O. Appl. Number	Number Forward Speeds	Teeth in P.T.O. Driver
MES-50A	NSD-7	5	L34
MES-50B	NSD-8	5	L33
MES-50C	NSD-9	5	L32
MLS-61A	NSD-6	6	L25
MLS-61B (UD3000SD)	NSD-6	6	L25
MLS-62B	NSD-6	6	L25
MLS-63B	NSD-6	6	L25
TMH-263	NSD-1	5	L23

IMPORTANT: See Safety Information in Section I of the Chelsea Applications catalog HY25-3000/US.

Transmission P.T.O. Driver & Aperatures (Viewed from Rear of Transmission)

L-Left Side R-Right Side B-Bottom Side T-Top Side

For transmission not listed, contact your authorized Chelsea Distributor.

January 2008

Parker Hannifin Corporation
Chelsea Products Division
Olive Branch, MS 38654 USA

TMH-263

LEFT SIDE ONLY

TRANSMISSION GEAR DATA:
L.H. 6-Bolt Opening Gear FORWARD of Centerline
23 Teeth - SPUR

PITCH LINE TO APERTURE FACE:
1.0850" (27.5600MM)

Caution: Application Approval Required for P.T.O. Output Shaft Speeds Above 2500 R.P.M.

LEFT Side P.T.O. Model	Inter. Torq.	Dir. Rot.	Engine % Hi	Engine % Rev	Filler Block	Adapter Assy.	Stud Kit	P.T.O. Model	Inter. Torq.	Dir. Rot.	Engine % Hi	Engine % Rev	Filler Block	Adapter Assy.	Stud Kit
ONE SPEED - SINGLE GEAR - MECHANICAL SHIFT															
100XRAHX-*3 (1)	125	Opp	37		7-A-032		7170-64X								
ONE SPEED - TWO GEAR - MECHANICAL SHIFT															
221XCAHX-*5	250	Eng	16		7-A-062 7-A-032 (2)		328170-169X								
221XEAHX-*5	250	Eng	19		7-A-032		328170-169X								
221XLAHX-*5	200	Eng	25		7-A-032		328170-169X								
221XPAHX-*5	200	Eng	31		7-A-032		328170-169X								
442KAAHX-*5 (3)	250	Eng	14				7170-78X								
442KCAHX-*5 (4)	250	Eng	18				7170-78X								
442KFAHX-*5 (5)	250	Eng	23				7170-78X								
442KHAHX-*5 (6)	250	Eng	27				7170-78X								
442KLAHX-*5 (7)	250	Eng	30				7170-78X								
442KQAHX-*5 (7)	225	Eng	32				7170-78X								
442KRAHX-*5 (7)	225	Eng	37				7170-78X								
442KSAHX-*5 (7)	200	Eng	44				7170-78X								
442KUAHX-*5 (7)	195	Eng	52				7170-78X								
442KWAHX-*5 (7)	175	Eng	61				7170-78X								
442KXAHX-*5 (7)	140	Eng	73				7170-78X								
ONE SPEED - TWO GEAR - POWERSHIFT (AIR)															
236KDAHX-*5 (7)	250	Eng	24				7170-78X								
236KKAHX-*5 (7)	250	Eng	31				7170-78X								
236KQAHX-*5 (7)	250	Eng	41				7170-78X								
236KUAHX-*5 (7)	225	Eng	47				7170-78X								
ONE SPEED - FORWARD & REVERSE															
340XFAHX-*5 (8)	200	Eng	20	21	7-A-140 (2) 7-A-032		7170-78X								
352XSAHX-*5 (7)	140	Eng	44	57			7170-78X								
ONE SPEED - DUAL SHAFT															
452XSAHX-*5 (7)	140	Eng	44				7170-78X								
GEARED ADAPTERS															
626KAHX-3AH							7170-78X								
630KAHX-3AH							7170-78X								
645KAHX-3AH							7170-78X								

(1) Gear and Shaft Kit No. KXA-2-P-565
(2) Filler block furnished with P.T.O.
(3) Input Gear Part No. 5-P-1280
(4) Input Gear Part No. 5-P-1287
(5) Input Gear Part No. 5-P-1077
(6) Input Gear Part No. 5-P-1364
(7) Input Gear Part No. 5-P-1004
(8) Input Gear Part No. 5-P-581

Parker Hannifin Corporation
Chelsea Products Division
Olive Branch, MS 38654 USA

MLS-61A
MLS-61B
MLS-62B
MLS-63B

LEFT SIDE ONLY

TRANSMISSION GEAR DATA:
L.H. 6-Bolt Opening Gear NON-STANDARD of Centerline
25 Teeth - SPUR

PITCH LINE TO APERTURE FACE:
-.8345" (-21.1963MM)

Caution: Application Approval Required for P.T.O. Output Shaft Speeds Above 2500 R.P.M.

ONE SPEED - TWO GEAR - MECHANICAL SHIFT

LEFT Side P.T.O. Model	Inter. Torq.	Dir. Rot.	Engine % Hi	Engine % Rev	Filler Block	Adapter Assy.	Stud Kit	P.T.O. Model	Inter. Torq.	Dir. Rot.	Engine % Hi	Engine % Rev	Filler Block	Adapter Assy.	Stud Kit
447AUFYX-E6 (1)	110	Eng	60				Furnished								
447AUFYX-G6 (1)	110	Eng	60				Furnished								
447AUFYX-P6 (1)	110	Eng	60				Furnished								
447AWFYX-E6 (2)	76	Eng	87				Furnished								
447AWFYX-G6 (2)	76	Eng	87				Furnished								
447AWFYX-P6 (2)	76	Eng	87				Furnished								

NOTE: Through 1994 these transmissions required the "P" shift option designator which featured the 328388-60X installation kit. 1995-1998 the "E" shift option designator which includes the 328388-63X installation kit. 1999 and later the "G" shift option designator which includes the 328388-69X installation kit.

(1) Input Gear Part No. 5-P-977
(2) Input Gear Part No. 5-P-976

Parker Hannifin Corporation
Chelsea Products Division
Olive Branch, MS 38654 USA

MES-50A

LEFT SIDE ONLY

TRANSMISSION GEAR DATA:

L.H. 6-Bolt Opening Gear NON-STANDARD of Centerline

34 Teeth - R.H. HELIX

PITCH LINE TO APERTURE FACE:

2.9890" (75.9206MM)

Caution: Application Approval Required for P.T.O. Output Shaft Speeds Above 2500 R.P.M.

LEFT Side P.T.O. Model	Inter. Torq.	Dir. Rot.	Engine % Hi	Engine % Rev	Filler Block	Adapter Assy.	Stud Kit	P.T.O. Model	Inter. Torq.	Dir. Rot.	Engine % Hi	Engine % Rev	Filler Block	Adapter Assy.	Stud Kit
ONE SPEED - SINGLE GEAR - MECHANICAL SHIFT															
100XRGWX-*4 (1)	125	Opp	79		7-A-240(P) 7-A-062(T)	329000-2X	7170-11X								
309102 (1)	125	Opp	79		7-A-240(P) 7-A-062(T)	329000-2X	Furnished								

NOTE: 100XRGWX-*4 requires 2-P-746 and wire shift cover 329009X.

NOTE: 309102 is a standard 100XRGWX-W4XA. It also includes the following parts: 7-A-240, 7-A-062, 329000-2X and 7170-11X.

(1) Gear and Shaft Kit No. KXA-2-P-746

MES-50B

LEFT SIDE ONLY

TRANSMISSION GEAR DATA:

L.H. 6-Bolt Opening Gear CENTER of Centerline

33 Teeth - R.H. HELIX

PITCH LINE TO APERTURE FACE:

2.9890" (75.9206MM)

Caution: Application Approval Required for P.T.O. Output Shaft Speeds Above 2500 R.P.M.

LEFT Side P.T.O. Model	Inter. Torq.	Dir. Rot.	Engine % Hi	Engine % Rev	Filler Block	Adapter Assy.	Stud Kit	P.T.O. Model	Inter. Torq.	Dir. Rot.	Engine % Hi	Engine % Rev	Filler Block	Adapter Assy.	Stud Kit
ONE SPEED - SINGLE GEAR - MECHANICAL SHIFT															
100XRGWX-*4 (1)	125	Opp	76		7-A-240(P)	329000-2X	7170-11X								

(1) Gear and Shaft Kit No. KXA-2-P-746

Parker Chelsea

Parker Hannifin Corporation
Chelsea Products Division
Olive Branch, MS 38654 USA

MES-50C

LEFT SIDE ONLY

TRANSMISSION GEAR DATA:

L.H. 6-Bolt Opening Gear CENTER of Centerline

32 Teeth - R.H. HELIX

PITCH LINE TO APERTURE FACE:

3.0490" (77.4450MM)

Caution: Application Approval Required for P.T.O. Output Shaft Speeds Above 2500 R.P.M.

LEFT Side P.T.O. Model	Inter. Torq.	Dir. Rot.	Engine % Hi	Engine % Rev	Filler Block	Adapter Assy.	Stud Kit	P.T.O. Model	Inter. Torq.	Dir. Rot.	Engine % Hi	Engine % Rev	Filler Block	Adapter Assy.	Stud Kit
ONE SPEED - SINGLE GEAR - MECHANICAL SHIFT															
100XRGWX-*4 (1)	125	Opp	74		7-A-240(P)	329000-2X	7170-11X								

(1) Gear and Shaft Kit No. KXA-2-P-746

Parker Chelsea

Parker Hannifin Corporation
Chelsea Products Division
Olive Branch, MS 38654 USA

RENAULT

⚠ WARNING

FAILURE OR IMPROPER SELECTION OR IMPROPER USE OF THE PRODUCTS AND/OR SYSTEMS DESCRIBED HEREIN OR RELATED ITEMS CAN CAUSE DEATH, PERSONAL INJURY AND PROPERTY DAMAGE.

This document and other information from Parker Hannifin Corporation, its subsidiaries and authorized distributors provide product and/or system options for further investigation by users having technical expertise. It is important that you analyze all aspects of your application and review the information concerning the product or system in the current product catalog. Due to the variety of operating conditions and applications for these products or systems, the user, through its own analysis and testing, is solely responsible for making the final selection of the products and systems and assuring that all performance, safety and warning requirements of the application are met.

The products described herein, including without limitation, product features, specifications, designs, availability and pricing, are subject to change by Parker Hannifin Corporation and its subsidiaries at any time without notice.

Offer of Sale

The items described in this document are hereby offered for sale by Parker Hannifin Corporation, its subsidiaries or its authorized distributors. This offer and its acceptance are governed by the provisions stated in the "Offer of Sale".

© Copyright 2008, Parker Hannifin Corporation, All Rights Reserved

Parker Hannifin Corporation
Chelsea Products Division
Olive Branch, MS 38654 USA

Transmission Make and Model	P.T.O. Appl. Number	Number Forward Speeds	Teeth in P.T.O. Driver
BDSL-132R	RNT-1	10	R33
BDSL-181 (MACK-T1060)	RNT-1	6	R33
BDSL-2052R	RNT-1	10	R33
BDSL-2142	RNT-2	5	R53
BDSL-2142R (MACK-T1100)	RNT-2	10	R53
G409-0 (MACK-T1090)	RNT-6	9	R53

IMPORTANT: See Safety Information in Section I of the Chelsea Applications catalog HY25-3000/US.

Transmission P.T.O. Driver & Aperatures (Viewed from Rear of Transmission)

L-Left Side R-Right Side B-Bottom Side T-Top Side

For transmission not listed, contact your authorized Chelsea Distributor.

January 2008

Parker Hannifin Corporation
Chelsea Products Division
Olive Branch, MS 38654 USA

T1060
BDSL-132R
BDSL-181
BDSL-2052R

RIGHT SIDE ONLY

TRANSMISSION GEAR DATA:
R.H. 6-Bolt Opening Gear FORWARD of Centerline
33 Teeth - R.H. HELIX

PITCH LINE TO APERTURE FACE:
1.1980" (30.4300MM)

Caution: Application Approval Required for P.T.O. Output Shaft Speeds Above 2500 R.P.M.

P.T.O. Model	Inter. Torq.	Dir. Rot.	Engine % Hi	Engine % Rev	Filler Block	Adapter Assy.	Stud Kit	RIGHT Side P.T.O. Model	Inter. Torq.	Dir. Rot.	Engine % Hi	Engine % Rev	Filler Block	Adapter Assy.	Stud Kit
ONE SPEED - TWO GEAR - MECHANICAL SHIFT															
								442LLDHX-*3 (1)	250	Opp	63		7-A-125		7170-60X
								442LQDHX-*3 (1)	225	Opp	68		7-A-125		7170-60X
								442LRDHX-*3 (1)	225	Opp	79		7-A-125		7170-60X
								442LSDHX-*3 (1)	200	Opp	94		7-A-125		7170-60X
								442LUDHX-*3 (1)	195	Opp	112		7-A-125		7170-60X
								442LWDHX-*3 (1)	175	Opp	131		7-A-125		7170-60X
								442LXDHX-*3 (1)	140	Opp	156		7-A-125		7170-60X
ONE SPEED - FORWARD & REVERSE															
								352LSDHX-*3 (1)	140	Opp	95	123	7-A-125		7170-60X
ONE SPEED - DUAL SHAFT															
								452LSDHX-*3 (1)	140	Opp	95		7-A-125		7170-60X

NOTE: No adapters available for this application.

(1) Input Gear Part No. 5-P-1041

Parker Hannifin Corporation
Chelsea Products Division
Olive Branch, MS 38654 USA

T1100
BDSL-2142
BDSL-2142R

RIGHT SIDE ONLY

TRANSMISSION GEAR DATA:
R.H. 6-Bolt Opening Gear FORWARD of Centerline
53 Teeth - R.H. HELIX

PITCH LINE TO APERTURE FACE:
.4360" (11.0700MM)

Caution: Application Approval Required for P.T.O. Output Shaft Speeds Above 2500 R.P.M.

P.T.O. Model	Inter. Torq.	Dir. Rot.	Engine % Hi	Engine % Rev	Filler Block	Adapter Assy.	Stud Kit	RIGHT Side P.T.O. Model	Inter. Torq.	Dir. Rot.	Engine % Hi	Engine % Rev	Filler Block	Adapter Assy.	Stud Kit
ONE SPEED - SINGLE GEAR - MECHANICAL SHIFT															
								100XRDJX-*3 (1)	125	Eng	126		7-A-550		7170-62X
ONE SPEED - TWO GEAR - MECHANICAL SHIFT															
								442KFDJX-*3 (2)	250	Opp	72		7-A-125 7-A-500		7170-61X
								442KLDJX-*3 (3)	250	Opp	93		7-A-125 7-A-500		7170-61X
								442KQDJX-*3 (3)	225	Opp	100		7-A-125 7-A-500		7170-61X
								442KRDJX-*3 (3)	225	Opp	116		7-A-125 7-A-500		7170-61X
								442KSDJX-*3 (3)	200	Opp	138		7-A-125 7-A-500		7170-61X
								442KUDJX-*3 (3)	195	Opp	164		7-A-125 7-A-500		7170-61X
								442KWDJX-*3 (3)	175	Opp	193		7-A-125 7-A-500		7170-61X
								442KXDJX-*3 (3)	140	Opp	228		7-A-125 7-A-500		7170-61X

NOTE: No adapters available for this application.

(1) Gear and Shaft Kit No. KXA-2-P-609
(2) Input Gear Part No. 5-P-1086
(3) Input Gear Part No. 5-P-1042

T1090
G409-0

RIGHT SIDE ONLY

TRANSMISSION GEAR DATA:
R.H. 6-Bolt Opening Gear FORWARD of Centerline
53 Teeth - R.H. HELIX

PITCH LINE TO APERTURE FACE:
.4500" (11.4300MM)

Caution: Application Approval Required for P.T.O. Output Shaft Speeds Above 2500 R.P.M.

P.T.O. Model	Inter. Torq.	Dir. Rot.	Engine % Hi	Engine % Rev	Filler Block	Adapter Assy.	Stud Kit	RIGHT Side P.T.O. Model	Inter. Torq.	Dir. Rot.	Engine % Hi	Engine % Rev	Filler Block	Adapter Assy.	Stud Kit
ONE SPEED - SINGLE GEAR - MECHANICAL SHIFT															
								100XRDJX-*3 (1)	125	Eng	137		7-A-550		7170-62X
ONE SPEED - TWO GEAR - MECHANICAL SHIFT															
								442KFDJX-*3 (2)	250	Opp	78		7-A-125 7-A-500		7170-61X
								442KLDJX-*3 (3)	250	Opp	101		7-A-125 7-A-500		7170-61X
								442KQDJX-*3 (3)	225	Opp	109		7-A-125 7-A-500		7170-61X
								442KRDJX-*3 (3)	225	Opp	126		7-A-125 7-A-500		7170-61X
								442KSDJX-*3 (3)	200	Opp	150		7-A-125 7-A-500		7170-61X
								442KUDJX-*3 (3)	195	Opp	178		7-A-125 7-A-500		7170-61X
								442KWDJX-*3 (3)	175	Opp	210		7-A-125 7-A-500		7170-61X
								442KXDJX-*3 (3)	140	Opp	248		7-A-125 7-A-500		7170-61X
ONE SPEED - FORWARD & REVERSE															
								340SFDJX-*3 (4)	200	Opp	71	75	7-A-800		7170-61X

NOTE: No adapters available for this application.

(1) Gear and Shaft Kit No. KXA-2-P-609
(2) Input Gear Part No. 5-P-1086
(3) Input Gear Part No. 5-P-1042
(4) Input Gear Part No. 5-P-921

TREMEC

⚠ WARNING

FAILURE OR IMPROPER SELECTION OR IMPROPER USE OF THE PRODUCTS AND/OR SYSTEMS DESCRIBED HEREIN OR RELATED ITEMS CAN CAUSE DEATH, PERSONAL INJURY AND PROPERTY DAMAGE.

This document and other information from Parker Hannifin Corporation, its subsidiaries and authorized distributors provide product and/or system options for further investigation by users having technical expertise. It is important that you analyze all aspects of your application and review the information concerning the product or system in the current product catalog. Due to the variety of operating conditions and applications for these products or systems, the user, through its own analysis and testing, is solely responsible for making the final selection of the products and systems and assuring that all performance, safety and warning requirements of the application are met.

The products described herein, including without limitation, product features, specifications, designs, availability and pricing, are subject to change by Parker Hannifin Corporation and its subsidiaries at any time without notice.

Offer of Sale

The items described in this document are hereby offered for sale by Parker Hannifin Corporation, its subsidiaries or its authorized distributors. This offer and its acceptance are governed by the provisions stated in the "Offer of Sale".

© Copyright 2008, Parker Hannifin Corporation, All Rights Reserved

Parker Hannifin Corporation
Chelsea Products Division
Olive Branch, MS 38654 USA

Transmission Make and Model	P.T.O. Appl. Number	Number Forward Speeds	Teeth in P.T.O. Driver
TDET0880 (Same as TR-4050, Dodge Mexico)	TTC-150	5	R32
TDET1361 (Same as TR-4050, Chev/GMC)	TTC-150	5	R32
TDET1664 (Same as TR-4050, Ford Mexico)	TTC-150	5	R32
TR-4050 (Transmission made in Mexico)	TTC-150	5	R32
190F	WRN-5	4	L36-R36

IMPORTANT: See Safety Information in Section 1 of the Chelsea Applications catalog HY25-3000/US.

Transmission P.T.O. Driver & Aperatures (Viewed from Rear of Transmission)

L-Left Side R-Right Side B-Bottom Side T-Top Side

For transmission not listed, contact your authorized Chelsea Distributor.

January 2008

Parker Hannifin Corporation
Chelsea Products Division
Olive Branch, MS 38654 USA

TDET0880
TDET1361
TDET1664
TR-4050

RIGHT SIDE ONLY

TRANSMISSION GEAR DATA:
R.H. 6-Bolt Opening Gear FORWARD of Centerline
32 Teeth - R.H. HELIX

PITCH LINE TO APERTURE FACE:
1.1400" (28.9342MM)

Caution: Application Approval Required for P.T.O. Output Shaft Speeds Above 2500 R.P.M.

P.T.O. Model	Inter. Torq.	Dir. Rot.	Engine % Hi	Engine % Rev	Filler Block	Adapter Assy.	Stud Kit	RIGHT Side P.T.O. Model	Inter. Torq.	Dir. Rot.	Engine % Hi	Engine % Rev	Filler Block	Adapter Assy.	Stud Kit
ONE SPEED - TWO GEAR - MECHANICAL SHIFT															
								442XLKNX-*3 (1)	250	Opp	49				Furnished
								442XQKNX-*3 (1)	225	Opp	53				Furnished
								442XRKNX-*3 (1)	225	Opp	61				Furnished
								442XSKNX-*3 (1)	200	Opp	73				Furnished
								442XUKNX-*3 (1)	195	Opp	87				Furnished
								442XWKNX-*3 (1)	175	Opp	102				Furnished
								442XXKNX-*3 (1)	140	Opp	121				Furnished
GEARED ADAPTERS															
								626XKNX-3KP							7170-4X
								630XKNX-3KP							7170-4X
								645XKNX-3KP							7170-4X

(1) Input Gear Part No. 5-P-1383

Parker Hannifin Corporation
Chelsea Products Division
Olive Branch, MS 38654 USA

190F	T-98-1V
T-18	T-98A
T-19	
T-98-1P	
T-98-1R	

LEFT SIDE ONLY

TRANSMISSION GEAR DATA:
L.H. 6-Bolt Opening Gear REAR of Centerline
36 Teeth - R.H. HELIX

PITCH LINE TO APERTURE FACE:
1.0850" (27.5600MM)

RIGHT SIDE ONLY

TRANSMISSION GEAR DATA:
R.H. 6-Bolt Opening Gear REAR of Centerline
36 Teeth - R.H. HELIX

PITCH LINE TO APERTURE FACE:
1.0850" (27.5600MM)

Caution: Application Approval Required for P.T.O. Output Shaft Speeds Above 2500 R.P.M.

LEFT Side P.T.O. Model	Inter. Torq.	Dir. Rot.	Engine % Hi	Engine % Rev	Filler Block	Adapter Assy.	Stud Kit	RIGHT Side P.T.O. Model	Inter. Torq.	Dir. Rot.	Engine % Hi	Engine % Rev	Filler Block	Adapter Assy.	Stud Kit
ONE SPEED - SINGLE GEAR - MECHANICAL SHIFT															
								100XRBZX-*4 (1)	125	Eng	51				Furnished
ONE SPEED - TWO GEAR - MECHANICAL SHIFT															
442XLBZX-*6 (2)	250	Opp	40				Furnished	442XLBZX-*4 (2)	250	Opp	40				Furnished
442XQBZX-*6 (2)	225	Opp	43				Furnished	442XQBZX-*4 (2)	225	Opp	43				Furnished
442XRBZX-*6 (2)	225	Opp	50				Furnished	442XRBZX-*4 (2)	225	Opp	50				Furnished
442XSBZX-*6 (2)	200	Opp	60				Furnished	442XSBZX-*4 (2)	200	Opp	60				Furnished
442XUBZX-*6 (2)	195	Opp	71				Furnished	442XUBZX-*4 (2)	195	Opp	71				Furnished
442XWBZX-*6 (2)	175	Opp	84				Furnished	442XWBZX-*4 (2)	175	Opp	84				Furnished
442XXBZX-*6 (2)	140	Opp	99				Furnished	442XXBZX-*4 (2)	140	Opp	99				Furnished
ONE SPEED - FORWARD & REVERSE															
352XSBZX-*6 (2)	140	Opp	60	78			Furnished	352XSBZX-*4 (2)	140	Opp	60	78			Furnished
ONE SPEED - DUAL SHAFT															
452XSBZX-*6 (2)	140	Opp	60				Furnished	452XSBZX-*6 (2)	140	Opp	60				Furnished

NOTE: T-18 available with opening on right or left side.

NOTE: Navistar Model #T-427 for T-19 has both right and left hand openings.

NOTE: No adapters available for this application.

(1) Gear and Shaft Kit No. KXA-2-P-583
(2) Input Gear Part No. 5-P-1028

Parker Hannifin Corporation
Chelsea Products Division
Olive Branch, MS 38654 USA

Notes

TTC

⚠ WARNING

FAILURE OR IMPROPER SELECTION OR IMPROPER USE OF THE PRODUCTS AND/OR SYSTEMS DESCRIBED HEREIN OR RELATED ITEMS CAN CAUSE DEATH, PERSONAL INJURY AND PROPERTY DAMAGE.

This document and other information from Parker Hannifin Corporation, its subsidiaries and authorized distributors provide product and/or system options for further investigation by users having technical expertise. It is important that you analyze all aspects of your application and review the information concerning the product or system in the current product catalog. Due to the variety of operating conditions and applications for these products or systems, the user, through its own analysis and testing, is solely responsible for making the final selection of the products and systems and assuring that all performance, safety and warning requirements of the application are met.

The products described herein, including without limitation, product features, specifications, designs, availability and pricing, are subject to change by Parker Hannifin Corporation and its subsidiaries at any time without notice.

Offer of Sale

The items described in this document are hereby offered for sale by Parker Hannifin Corporation, its subsidiaries or its authorized distributors. This offer and its acceptance are governed by the provisions stated in the "Offer of Sale".

© Copyright 2008, Parker Hannifin Corporation, All Rights Reserved

Parker Hannifin Corporation
Chelsea Products Division
Olive Branch, MS 38654 USA

Transmission Make and Model	P.T.O. Appl. Number	Number Forward Speeds	Teeth in P.T.O. Driver
AMO1000-4C (BM#301474)	SPR-87	4	L39-R39
AMO1000-4D (BM#301475)	SPR-87	4	L39-R39
AMO610-4L (BM#301478)	SPR-89	3	R34
APO1000-4C (BM#301476)	SPR-87	4	L39-R39
APO1000-4D (BM#301477)	SPR-87	4	L39-R39
AS100-10D (BM#301612)	SPR-143	10	L45-R45
AS125-10D (BM#301613)	SPR-143	10	L45-R45
AS125-9A	SPR-136	9	L45-R45
AS135-10D (BM#301614)	SPR-143	10	L45-R45
AS135-9A	SPR-136	9	L45-R45
AS140-9A	SPR-136	9	L45-R45
AS145-10D (BM#301615)	SPR-143	10	L45-R45
AS56-7B (AMT-7 Series - Automated Mechanical Transmission)	TTC-149	7	L34-R34
ASO10-ESP	SPR-140	10	L45-R45
ASO10-VP10	SPR-140	10	L45-R45
ASO100-10S	SPR-140	10	L45-R45
ASO125-10S (BM#301579)	SPR-140	10	L45-R45
ASO125-9A	SPR-137	9	L45-R45
ASO135-9A	SPR-137	9	L45-R45
ASO140-10S (BM#301580)	SPR-140	10	L45-R45
ASO140-9A	SPR-137	9	L45-R45
ASO145-9A	SPR-137	9	L45-R45
ASO150-10S (BM#301578)	SPR-140	10	L45-R45
ASO150-9A	SPR-137	9	L45-R45
ASO160-10S	SPR-140	10	L45-R45
ASO165-10S (BM#301581)	SPR-140	10	L45-R45
ASO66-7B (AMT-7 Series - Automated Mechanical Transmission)	SPR-138	7	L34-R34
ATO100-4D	SPR-87	4	L39-R39
ATO1000-4C (BM#301474)	SPR-87	4	L39-R39
ATO1000-4D (BM#301475)	SPR-87	4	L39-R39
ATO610-4L (BM#301478)	SPR-89	3	R34
CM4052-A	SPR-126	5	L40-R40
CM4052-D	SPR-127	5	L42-R42
CM4054-A	SPR-126	5	L40-R40
CM4054-D	SPR-127	5	L42-R42
CM4954-A	SPR-133	5	L32-R32

IMPORTANT: See Safety Information in Section I of the Chelsea Applications catalog HY25-3000/US.

Transmission P.T.O. Driver & Aperatures (Viewed from Rear of Transmission)

L-Left Side R-Right Side B-Bottom Side T-Top Side

For transmission not listed, contact your authorized Chelsea Distributor.

January 2008

Parker Hannifin Corporation
Chelsea Products Division
Olive Branch, MS 38654 USA

TTC TRANSMISSION INDEX

Transmission Make and Model	P.T.O. Appl. Number	Number Forward Speeds	Teeth in P.T.O. Driver
CM4954-D	SPR-134	5	L34-R34
CM50-HD	TSP-4	5	L43-R43
CM5052-A	SPR-94	5	L41-R41
CM5052-B	SPR-93	5	L39-R39
CM5052-C	SPR-94	5	L41-R41
CM5052-D	SPR-95	5	L43-R43
CM5252-A	SPR-95	5	L43-R43
CM5510-A	SPR-94	5	L41-R41
CM5552-A	SPR-94	5	L41-R41
CM5552-B	SPR-93	5	L39-R39
CM5552-C	SPR-94	5	L41-R41
CM5552-D	SPR-95	5	L43-R43
CM5852-A	SPR-95	5	L43-R43
CM5952-A	SPR-128	5	L41-R41
CM5952-B	SPR-129	5	L39-R39
CM5952-C	SPR-128	5	L41-R41
CM5952-D	SPR-130	5	L43-R43
CM5952-E	SPR-131	5	L43-R43
CV-31 (Spicer Mexico)	SPR-11	5	L25-R22
CV-34 (Spicer Mexico)	SPR-64	5	L25-R42
CV-37F (Spicer Mexico)	SPR-14	5	L26-R21
EPSO175-16M (BM#301856)	SPR-145	16	B57-R57
ES42-5A (BM#301438)	SPR-126	5	L40-R40
ES42-5D (BM#301439)	SPR-127	5	L42-R42
ES43-5A (BM#301633)	SPR-133	5	L32-R32
ES43-5D (BM#301634)	SPR-134	5	L34-R34
ES52-5A (BM#301455)	SPR-133	5	L32-R32
ES52-5D (BM#301456)	SPR-134	5	L34-R34
ES52-7A (BM#301635)	SPR-139	7	L34-R34
ES52-7B (BM#301637)	SPR-139	7	L34-R34
ES53-5A (BM#301631)	SPR-133	5	L32-R32
ES53-5D (BM#301632)	SPR-134	5	L34-R34
ES55-5D	SPR-130	5	L43-R43
ES56-5A	TTC-147	5	L32-R32
ES56-7B	TTC-149	7	L34-R34
ES60-5A (BM#301460)	SPR-128	5	L41-R41

IMPORTANT: See Safety Information in Section 1 of the Chelsea Applications catalog HY25-3000/US.

Transmission P.T.O. Driver & Aperatures (Viewed from Rear of Transmission)

L-Left Side R-Right Side B-Bottom Side T-Top Side

For transmission not listed, contact your authorized Chelsea Distributor.

January 2008

Parker Hannifin Corporation
Chelsea Products Division
Olive Branch, MS 38654 USA

Transmission Make and Model	P.T.O. Appl. Number	Number Forward Speeds	Teeth in P.T.O. Driver
ES60-5C (BM#301461)	SPR-128	5	L41-R41
ES60-5D (BM#301462)	SPR-130	5	L43-R43
ES60-5E (BM#301463)	SPR-131	5	L43-R43
ES60-5F (BM#301482)	SPR-128	5	L41-R41
ES62-5A (BM#301528)	SPR-128	5	L41-R41
ES62-5D (BM#301530)	SPR-130	5	L43-R43
ES67-5A (BM#301532)	SPR-128	5	L41-R41
ES67-5D (BM#301534)	SPR-130	5	L43-R43
ESO65-7A (BM#301636)	SPR-138	7	L34-R34
ESO66-7B (BM#301638)	SPR-138	7	L34-R34
LAS100-10D (BM#301616)	SPR-143	10	L45-R45
LAS115-9A (BM#301590)	SPR-136	9	L45-R45
LAS125-10D (BM#301617)	SPR-143	10	L45-R45
LAS125-9A	SPR-136	9	L45-R45
LAS135-10D (BM#301618)	SPR-143	10	L45-R45
LAS135-9A (BM#301592)	SPR-136	9	L45-R45
LAS140-9A	SPR-136	9	L45-R45
LAS145-10D (BM#301619)	SPR-143	10	L45-R45
LAS145-9A (BM#301593)	SPR-136	9	L45-R45
LASO115-9A (BM#301594)	SPR-137	9	L45-R45
LASO125-10S (BM#301620)	SPR-140	10	L45-R45
LASO125-9A (BM#301595)	SPR-137	9	L45-R45
LASO135-9A (BM#301597)	SPR-137	9	L45-R45
LASO140-10S (BM#301621)	SPR-140	10	L45-R45
LASO140-9A	SPR-137	9	L45-R45
LASO145-9A (BM#301596)	SPR-137	9	L45-R45
LASO150-10S (BM#301622)	SPR-140	10	L45-R45
LASO150-9A	SPR-137	9	L45-R45
LLAS100-10D	SPR-143	10	L45-R45
LLAS125-10D	SPR-143	10	L45-R45
LLAS135-10D	SPR-143	10	L45-R45
LLAS145-10D	SPR-143	10	L45-R45
LLASO125-10S	SPR-140	10	L45-R45
LLASO140-10S	SPR-140	10	L45-R45
LLASO150-10S	SPR-140	10	L45-R45
LLPS100-10D	SPR-143	10	L45-R45

IMPORTANT: See Safety Information in Section I of the Chelsea Applications catalog HY25-3000/US.

Transmission P.T.O. Driver & Aperatures (Viewed from Rear of Transmission)

L-Left Side R-Right Side B-Bottom Side T-Top Side

For transmission not listed, contact your authorized Chelsea Distributor.

January 2008

Parker Hannifin Corporation
Chelsea Products Division
Olive Branch, MS 38654 USA

TTC TRANSMISSION INDEX

Transmission Make and Model	P.T.O. Appl. Number	Number Forward Speeds	Teeth in P.T.O. Driver
LLPS125-10D	SPR-143	10	L45-R45
LLPS135-10D	SPR-143	10	L45-R45
LLPS145-10D	SPR-143	10	L45-R45
LLPSO100-10S	SPR-140	10	L45-R45
LLPSO125-10S	SPR-140	10	L45-R45
LLPSO140-10S	SPR-140	10	L45-R45
LLPSO150-10S	SPR-140	10	L45-R45
LLPSO165-10S	SPR-140	10	L45-R45
LPS100-10D (BM#301608)	SPR-143	10	L45-R45
LPS125-10D (BM#301609)	SPR-143	10	L45-R45
LPS125-9A (BM#301567)	SPR-136	9	L45-R45
LPS135-10D (BM#301610)	SPR-143	10	L45-R45
LPS140-9A (BM#301569)	SPR-136	9	L45-R45
LPS145-10D (BM#301611)	SPR-143	10	L45-R45
LPSO100-10S	SPR-140	10	L45-R45
LPSO125-10S (BM#301572)	SPR-140	10	L45-R45
LPSO125-9A (BM#301568)	SPR-137	9	L45-R45
LPSO140-10S (BM#301573)	SPR-140	10	L45-R45
LPSO140-9A (BM#301570)	SPR-137	9	L45-R45
LPSO150-10S (BM#301574)	SPR-140	10	L45-R45
LPSO150-9A (BM#301571)	SPR-137	10	L45-R45
LPSO165-10S	SPR-140	10	L45-R45
Model 23/24	SPR-125	1	L36
PS100-10D (BM#301604)	SPR-143	10	L45-R45
PS105-7LL (BM#301464)	SPR-135	7	B43-R43
PS110-7A (BM#301519)	SPR-118	7	B43-R43
PS110-7B (BM#301518)	SPR-124	7	B56-R56
PS125-10D (BM#301605)	SPR-143	10	L45-R45
PS125-6L	SPR-135	5	B43-R43
PS125-7A	SPR-124	7	B56-R56
PS125-7B (BM#301445)	SPR-124	7	B56-R56
PS125-9A (BM#301554)	SPR-136	9	L45-R45
PS130-10A (BM#301485)	SPR-123	10	B51-R51
PS130-12A (BM#301484)	SPR-123	12	B51-R51
PS130-5A (BM#301470)	SPR-114	5	B43-R43
PS130-6B (BM#301471)	SPR-106	6	B48-R48

IMPORTANT: See Safety Information in Section 1 of the Chelsea Applications catalog HY25-3000/US.

Transmission P.T.O. Driver & Aperatures (Viewed from Rear of Transmission)

L-Left Side R-Right Side B-Bottom Side T-Top Side

For transmission not listed, contact your authorized Chelsea Distributor.

January 2008

Parker Hannifin Corporation
Chelsea Products Division
Olive Branch, MS 38654 USA

Transmission Make and Model	P.T.O. Appl. Number	Number Forward Speeds	Teeth in P.T.O. Driver
PS130-6C	SPR-106	6	B48-R48
PS130-6L (BM#301465)	SPR-135	6	B43-R43
PS135-10D (BM#301606)	SPR-143	10	L45-R45
PS140-5	SPR-113	5	B44-R44
PS140-7A (BM#301444)	SPR-118	7	B43-R43
PS140-9A (BM#301555)	SPR-136	9	L45-R45
PS145-10D (BM#301607)	SPR-143	10	L45-R45
PS145-7A (BM#301520)	SPR-118	7	B43-R43
PS85-14-4L (BM#301525)	SPR-123	14	B51-R51
PS86-10V (BM#301587)	SPR-144	10	L45-R45
PS9-VPD	SPR-136	9	L45-R45
PS95-9A (BM#301553)	SPR-136	9	L45-R45
PS97-7A (BM#301446)	SPR-132	7	B50-R50
PSDO165-18A (Released for Mexico Market)	TTC-151	18	B52-R52
PSDO185-18A (Released for Mexico Market)	TTC-151	18	B52-R52
PSDO205-18A (Released for Mexico Market)	TTC-151	18	B52-R52
PSO10-ESP	SPR-140	10	L45-R45
PSO10-VPD	SPR-140	10	L45-R45
PSO100-10S (BM#301560)	SPR-140	10	L45-R45
PSO105-7LL	SPR-135	9	B43-R43
PSO115-10V (BM#301588)	SPR-140	10	L45-R45
PSO120-8LL (BM#301644)	SPR-111	9	B54-R54
PSO125-10D	SPR-146	10	L45-R45
PSO125-10S (BM#301561)	SPR-140	10	L45-R45
PSO125-10V (BM#301589)	SPR-140	10	L45-R45
PSO125-6L	SPR-111	7	B54-R54
PSO125-9A (BM#301556)	SPR-137	9	L45-R45
PSO135-10D	SPR-146	10	L45-R45
PSO140-10S (BM#301562)	SPR-140	10	L45-R45
PSO140-12B (BM#301473)	SPR-103	12	B54-R54
PSO140-14A (BM#301483)	SPR-103	14	B54-R54
PSO140-6A (BM#301472)	SPR-110	6	B54-R54
PSO140-6C	SPR-110	6	B54-R54
PSO140-9A (BM#301557)	SPR-137	9	L45-R45
PSO145-10D	SPR-146	10	L45-R45
PSO145-10V (BM#301582)	SPR-140	10	L45-R45

IMPORTANT: See Safety Information in Section I of the Chelsea Applications catalog HY25-3000/US.

Transmission P.T.O. Driver & Aperatures (Viewed from Rear of Transmission)

L-Left Side R-Right Side B-Bottom Side T-Top Side

For transmission not listed, contact your authorized Chelsea Distributor.

January 2008

Parker Hannifin Corporation
Chelsea Products Division
Olive Branch, MS 38654 USA

TTC TRANSMISSION INDEX

Transmission Make and Model	P.T.O. Appl. Number	Number Forward Speeds	Teeth in P.T.O. Driver
PSO145-9R (BM#301625)	SPR-140	9	L45-R45
PSO150-10S (BM#301563)	SPR-140	10	L45-R45
PSO150-16A (BM#301641)	SPR-141	16	B54-R54
PSO150-16B (BM#301647)	SPR-142	16	B56-R56
PSO150-9A (BM#301558)	SPR-137	9	L45-R45
PSO155-10D	SPR-146	10	L45-R45
PSO160-10S	SPR-140	10	L45-R45
PSO165-10D	SPR-146	10	L45-R45
PSO165-10S (BM#301564)	SPR-140	10	L45-R45
PSO165-12B (BM#301586)	SPR-103	12	B54-R54
PSO165-16B (BM#301583)	SPR-145	16	B57-R57
PSO165-18A (BM#301666)	SPR-145	18	B57-R57
PSO175-16B (BM#301587)	SPR-142	16	B56-R56
PSO175-16M (BM#301645)	SPR-142	16	B56-R56
PSO175-16SM (BM#301853)	SPR-145	16	B57-R57
PSO175-18A (BM#301585)	SPR-145	18	B57-R57
PSO175-18M (BM#301849)	SPR-145	18	B57-R57
PSO85-14-4L (BM#301540)	SPR-103	14	B54-R54
PSO9-VPD	SPR-137	9	L45-R45
PSO95-9	SPR-137	9	L45-R45
PSX150-9S (BM#301521)	SPR-140	9	L45-R45
R8341-C	SPR-88	4	R33
R8341-D	SPR-89	4	R34
R8341-E	SPR-90	4	R35
R8341-F	SPR-88	4	R33
R8341-G	SPR-89	4	R34
R8341-K	SPR-88	4	R33
R8341-L	SPR-89	4	R34
R8516 (All Models - Compound Rear Box)	SPR-91	16	R32
R8716 (Compound Rear Box)	SPR-91	16	R32
RP8341-C	SPR-88	4	R33
RP8341-D	SPR-89	4	R34
RP8341-F	SPR-88	4	R33
RP8341-G	SPR-89	4	R34
RP8341-K	SPR-88	4	R33
RP8341-L	SPR-89	4	R34

IMPORTANT: See Safety Information in Section 1 of the Chelsea Applications catalog HY25-3000/US.

Transmission P.T.O. Driver & Aperatures (Viewed from Rear of Transmission)

L-Left Side R-Right Side B-Bottom Side T-Top Side

For transmission not listed, contact your authorized Chelsea Distributor.

January 2008

Parker Hannifin Corporation
Chelsea Products Division
Olive Branch, MS 38654 USA

Transmission Make and Model	P.T.O. Appl. Number	Number Forward Speeds	Teeth in P.T.O. Driver
RP8716 (Compound Rear Box)	SPR-91	16	R32
TR-4050 (Transmission made in Mexico)	TTC-150	5	R32
TSP120-12A	TSP-2	10	B51-R51
TSPO145-14A	TSP-8	14	B56-R56
TSPO150-12A	TSP-7	12	B49-R49
TSPO155-14HP	TSP-8	14	B56-R56
TSPO155-16A	TSP-3	10	B54-R54
TSPO155-16HP	TSP-1	16	B56-R56
TSPO165-18A	TSP-9	18	B57-R57
TSPO165-18HP	TSP-9	18	B57-R57
TSPO175-18M	TSP-9	18	B57-R57
TSPO180-16SM	TSP-5	16	L84-R84
TSPO180-18SM	TSP-6	18	L76-R76
1007-2A (BM#301117)	SPR-112	6	B45-R45
1007-2A (BM#301206)	SPR-112	6	B45-R45
1007-2B (BM#301118)	SPR-106	6	B48-R48
1007-2B (BM#301207)	SPR-106	6	B48-R48
1007-3A (BM#301121)	SPR-111	6	B54-R54
1007-3A (BM#301208)	SPR-111	6	B54-R54
1010-2A (BM#301111 and Later)	SPR-108	10	B49-R49
1010-3A (BM#301113 and Later)	SPR-103	10	B54-R54
1010-3B (BM#301115 and Later)	SPR-105	10	B48-R48
1010-4A (BM#301112 and Later)	SPR-108	10	B49-R49
1010-5A (BM#301114 and Later)	SPR-103	10	B54-R54
1020-2A (BM#301123 and Later)	SPR-108	20	B49-R49
1020-3A (BM#301125 and Later)	SPR-105	20	B48-R48
1020-4A (BM#301124 and Later)	SPR-108	20	B49-R49
1020-5A (BM#301126 and Later)	SPR-105	20	B48-R48
1052-A (BM#301091 and Later)	SPR-114	5	B43-R43
1054-A (BM#301092 and Later)	SPR-114	5	B43-R43
1062-A (BM#301101 and Later)	SPR-112	6	B45-R45
1062-B (BM#301103 and Later)	SPR-106	6	B48-R48
1062-C (BM#301133 and Later)	SPR-106	6	B48-R48
1062-D (BM#301148)	SPR-106	6	B48-R48
1064-A (BM#301102 and Later)	SPR-112	6	B45-R45
1064-B (BM#301104 and Later)	SPR-106	6	B48-R48

IMPORTANT: See Safety Information in Section I of the Chelsea Applications catalog HY25-3000/US.

Transmission P.T.O. Driver & Aperatures (Viewed from Rear of Transmission)

L-Left Side R-Right Side B-Bottom Side T-Top Side

For transmission not listed, contact your authorized Chelsea Distributor.

January 2008

Parker Hannifin Corporation
Chelsea Products Division
Olive Branch, MS 38654 USA

TTC TRANSMISSION INDEX

Transmission Make and Model	P.T.O. Appl. Number	Number Forward Speeds	Teeth in P.T.O. Driver
1064-C (BM#301136)	SPR-106	6	B48-R48
1064-D (BM#301149)	SPR-106	6	B48-R48
1107-2A (BM#301156)	SPR-116	7	B51-R51
1107-2A (BM#301201)	SPR-118	7	B43-R43
1207-2A (BM#301195)	SPR-112	7	B45-R45
1207-2B (BM#301196)	SPR-106	7	B48-R48
1207-3A (BM#301199)	SPR-111	7	B54-R54
1214-3A (BM#301212 & 301130 and Later)	SPR-104	14	B54-R54
1214-5A (BM#301213 & 301131 and Later)	SPR-104	14	B54-R54
1241-C (Aux.)	SPR-87	4	L39-R39
1241-D (Aux.)	SPR-87	4	L39-R39
1252-A (BM#301094 and Later)	SPR-113	5	B44-R44
1253-A (BM#301096 and Later)	SPR-107	5	B51-R51
1253-B (BM#301098 and Later)	SPR-109	5	B55-R55
1254-A (BM#301095 and Later)	SPR-113	5	B44-R44
1255-A (BM#301097 and Later)	SPR-107	5	B51-R51
1255-B (BM#301099 and Later)	SPR-109	5	B55-R55
1262-A (BM#301105 and Later)	SPR-112	6	B45-R45
1263-A (BM#301107 and Later)	SPR-110	6	B54-R54
1263-B (BM#301109 and Later)	SPR-111	6	B54-R54
1264-A (BM#301106)	SPR-112	6	B45-R45
1265-A (BM#301108)	SPR-110	6	B54-R54
1272-A (BM#301140 and Later)	SPR-106	7	B48-R48
1272-A (BM#301215)	SPR-106	7	B48-R48
1272-B (BM#301158)	SPR-106	7	B48-R48
1274-A (BM#301216 & 301141)	SPR-106	7	B48-R48
1274-B (BM#301159)	SPR-106	7	B48-R48
1310-2A (BM#301316)	SPR-123	10	B51-R51
1310-4A (BM#301317)	SPR-123	10	B51-R51
1352-A (BM#301235)	SPR-114	5	B43-R43
1362-A (BM#301169)	SPR-112	5	B45-R45
1362-B (BM#301171)	SPR-106	6	B48-R48
1362-C (BM#301178)	SPR-106	6	B48-R48
1362-D (BM#301180)	SPR-106	6	B48-R48
1364-C (BM#301179)	SPR-106	6	B48-R48
1372-A (BM#301271)	SPR-118	7	B43-R43

IMPORTANT: See Safety Information in Section 1 of the Chelsea Applications catalog HY25-3000/US.

Transmission P.T.O. Driver & Aperatures (Viewed from Rear of Transmission)

L-Left Side R-Right Side B-Bottom Side T-Top Side

For transmission not listed, contact your authorized Chelsea Distributor.

January 2008

Parker Hannifin Corporation
Chelsea Products Division
Olive Branch, MS 38654 USA

Transmission Make and Model	P.T.O. Appl. Number	Number Forward Speeds	Teeth in P.T.O. Driver
1372-B (BM#301325)	SPR-124	7	B56-R56
1374-A (BM#301272)	SPR-118	7	B43-R43
1410-2A (BM#301288)	SPR-108	10	B49-R49
1410-3A (BM#301163)	SPR-103	10	B54-R54
1410-3B (BM#301165)	SPR-105	10	B48-R48
1412-3A (BM#301227-1)	SPR-103	10	B54-R54
1414-3A (BM#301243)	SPR-103	14	B54-R54
1414-3A (BM#301290)	SPR-103	14	B54-R54
1420-3A (BM#301232)	SPR-103	14	B54-R54
1420-3B (BM#301332)	SPR-103	10	B54-R54
1452-A (BM#301183)	SPR-113	10	B44-R44
1453-A (BM#301185)	SPR-107	5	B51-R51
1453-B (BM#301187)	SPR-109	5	B55-R55
1462-A (BM#301173)	SPR-112	5	B45-R45
1463-A (BM#301175)	SPR-110	6	B54-R54
9072-A	SPR-132	7	B50-R50
9505-2A	SPR-135	5	B43-R43
9505-2B	SPR-135	5	B43-R43

IMPORTANT: See Safety Information in Section I of the Chelsea Applications catalog HY25-3000/US.

Transmission P.T.O. Driver & Aperatures (Viewed from Rear of Transmission)

L-Left Side R-Right Side B-Bottom Side T-Top Side

For transmission not listed, contact your authorized Chelsea Distributor.

January 2008

Parker Hannifin Corporation
Chelsea Products Division
Olive Branch, MS 38654 USA

CV-31

LEFT SIDE ONLY	RIGHT SIDE ONLY
TRANSMISSION GEAR DATA: L.H. 6-Bolt Opening Gear FORWARD of Centerline 25 Teeth - L.H. HELIX **PITCH LINE TO APERTURE FACE:** 1.1140" (28.3000MM)	**TRANSMISSION GEAR DATA:** R.H. 6-Bolt Opening Gear FORWARD of Centerline 22 Teeth - L.H. HELIX **PITCH LINE TO APERTURE FACE:** 1.1160" (28.3500MM)

Caution: Application Approval Required for P.T.O. Output Shaft Speeds Above 2500 R.P.M.

LEFT Side P.T.O. Model	Inter. Torq.	Dir. Rot.	Engine % Hi	Engine % Rev	Filler Block	Adapter Assy.	Stud Kit	RIGHT Side P.T.O. Model	Inter. Torq.	Dir. Rot.	Engine % Hi	Engine % Rev	Filler Block	Adapter Assy.	Stud Kit
ONE SPEED - SINGLE GEAR - MECHANICAL SHIFT															
100XRBHX-*3 (1)	125	Opp	49				Furnished	100XRBJX-*3 (2)	125	Eng	49				Furnished
ONE SPEED - TWO GEAR - MECHANICAL SHIFT															
442XLBHX-*5 (3)	250	Eng	37				Furnished								
442XQBHX-*5 (3)	225	Eng	40				Furnished								
442XRBHX-*5 (3)	225	Eng	47				Furnished								
442XSBHX-*5 (3)	200	Eng	55				Furnished								
442XUBHX-*5 (3)	195	Eng	66				Furnished								
442XWBHX-*5 (3)	175	Eng	78				Furnished								
442XXBHX-*5 (3)	140	Eng	92				Furnished								
ONE SPEED - FORWARD & REVERSE															
352XSBHX-*5 (3)	140	Eng	56	73			Furnished								
ONE SPEED - DUAL SHAFT															
452XSBHX-*3 (3)	140	Eng	56				Furnished								

(1) Gear and Shaft Kit No. KXA-2-P-572
(2) Gear and Shaft Kit No. KXA-2-P-573
(3) Input Gear Part No. 5-P-1016

Parker Hannifin Corporation
Chelsea Products Division
Olive Branch, MS 38654 USA

CV-37F

LEFT SIDE ONLY	RIGHT SIDE ONLY
TRANSMISSION GEAR DATA: L.H. 6-Bolt Opening Gear FORWARD of Centerline 26 Teeth - L.H. HELIX **PITCH LINE TO APERTURE FACE:** 1.1140" (28.3000MM)	**TRANSMISSION GEAR DATA:** R.H. 6-Bolt Opening Gear FORWARD of Centerline 21 Teeth - L.H. HELIX **PITCH LINE TO APERTURE FACE:** 1.1140" (28.3000MM)

Caution: Application Approval Required for P.T.O. Output Shaft Speeds Above 2500 R.P.M.

LEFT Side P.T.O. Model	Inter. Torq.	Dir. Rot.	Engine % Hi	Engine % Rev	Filler Block	Adapter Assy.	Stud Kit	RIGHT Side P.T.O. Model	Inter. Torq.	Dir. Rot.	Engine % Hi	Engine % Rev	Filler Block	Adapter Assy.	Stud Kit
ONE SPEED - SINGLE GEAR - MECHANICAL SHIFT															
100XRBHX-*3 (1)	125	Opp	51				Furnished	100XRBJX-*3 (2)	125	Eng	51				Furnished
ONE SPEED - TWO GEAR - MECHANICAL SHIFT															
442XLBHX-*5 (3)	250	Eng	39				Furnished								
442XQBHX-*5 (3)	225	Eng	42				Furnished								
442XRBHX-*5 (3)	225	Eng	48				Furnished								
442XSBHX-*5 (3)	200	Eng	58				Furnished								
442XUBHX-*5 (3)	195	Eng	69				Furnished								
442XWBHX-*5 (3)	175	Eng	81				Furnished								
442XXBHX-*5 (3)	140	Eng	95				Furnished								
ONE SPEED - FORWARD & REVERSE															
352XSBHX-*5 (3)	140	Eng	58	75			Furnished								
ONE SPEED - DUAL SHAFT															
452XSBHX-*3 (3)	140	Eng	58				Furnished								

(1) Gear and Shaft Kit No. KXA-2-P-572
(2) Gear and Shaft Kit No. KXA-2-P-573
(3) Input Gear Part No. 5-P-1016

CV-34

LEFT SIDE ONLY	RIGHT SIDE ONLY
TRANSMISSION GEAR DATA: L.H. 6-Bolt Opening Gear FORWARD of Centerline 25 Teeth - L.H. HELIX **PITCH LINE TO APERTURE FACE:** 1.1140" (28.3000MM)	**TRANSMISSION GEAR DATA:** R.H. 8-Bolt Opening Gear FORWARD of Centerline 42 Teeth - L.H. HELIX **PITCH LINE TO APERTURE FACE:** .8030" (20.4000MM)

Caution: Application Approval Required for P.T.O. Output Shaft Speeds Above 2500 R.P.M.

LEFT Side P.T.O. Model	Inter. Torq.	Dir. Rot.	Engine % Hi	Engine % Rev	Filler Block	Adapter Assy.	Stud Kit	RIGHT Side P.T.O. Model	Inter. Torq.	Dir. Rot.	Engine % Hi	Engine % Rev	Filler Block	Adapter Assy.	Stud Kit
ONE SPEED - SINGLE GEAR - MECHANICAL SHIFT															
100XRBHX-*3 (1)	125	Opp	49				Furnished	100XRBXX-*3 (2)	125	Eng	87			328481X	Furnished
ONE SPEED - TWO GEAR - MECHANICAL SHIFT															
442XLBHX-*5 (3)	250	Eng	37				Furnished								
442XQBHX-*5 (3)	225	Eng	40				Furnished								
442XRBHX-*5 (3)	225	Eng	47				Furnished								
442XSBHX-*5 (3)	200	Eng	55				Furnished								
442XUBHX-*5 (3)	195	Eng	66				Furnished								
442XWBHX-*5 (3)	175	Eng	78				Furnished								
442XXBHX-*5 (3)	140	Eng	92				Furnished								
ONE SPEED - FORWARD & REVERSE															
352XSBHX-*5 (3)	140	Eng	56	73			Furnished								
ONE SPEED - DUAL SHAFT															
452XSBHX-*3 (3)	140	Eng	56				Furnished								
GEARED ADAPTERS															
626XBHX-4BJ							Furnished								
630XBHX-4BJ							Furnished								
645XBHX-4BJ							Furnished								

(1) Gear and Shaft Kit No. KXA-2-P-572
(2) Gear and Shaft Kit No. KXA-2-P-581
(3) Input Gear Part No. 5-P-1016

Parker Hannifin Corporation
Chelsea Products Division
Olive Branch, MS 38654 USA

1241-C	APO1000-4D
1241-D	ATO100-4D
AMO1000-4C	ATO1000-4C
AMO1000-4D	ATO1000-4D
APO1000-4C	

LEFT SIDE ONLY

TRANSMISSION GEAR DATA:
L.H. 8-Bolt Opening Gear REAR of Centerline
39 Teeth - SPUR
PITCH LINE TO APERTURE FACE:
.6750" (17.1500MM)

RIGHT SIDE ONLY

TRANSMISSION GEAR DATA:
R.H. 6-Bolt Opening Gear REAR of Centerline
39 Teeth - SPUR
PITCH LINE TO APERTURE FACE:
.9460" (24.0300MM)

Caution: Application Approval Required for P.T.O. Output Shaft Speeds Above 2500 R.P.M.

LEFT Side P.T.O. Model	Inter. Torq.	Dir. Rot.	Engine % Hi	Engine % Rev	Filler Block	Adapter Assy.	Stud Kit	RIGHT Side P.T.O. Model	Inter. Torq.	Dir. Rot.	Engine % Hi	Engine % Rev	Filler Block	Adapter Assy.	Stud Kit
ONE SPEED - SINGLE GEAR - MECHANICAL SHIFT															
100XRABX-*4 (1)	125	Eng	172		7-A-125(P)	328481X	7170-11X	100XRABX-*4 (1)	125	Eng	172		7-A-125		7170-11X
812XKABX-*4	400	Eng	115		8-A-062		328170-21X								
ONE SPEED - TWO GEAR - MECHANICAL SHIFT															
221ZCABX-*6	250	Opp	79		7-A-093(P)	328564X	328170-1X	221XCABX-*4	250	Opp	79		7-A-093		328170-35X
221ZEABX-*6	250	Opp	88		7-A-093(P)	328564X	328170-1X	221XEABX-*4	250	Opp	88		7-A-093		328170-35X
221ZLABX-*6	200	Opp	118		7-A-093(P)	328564X	328170-1X	221XLABX-*4	200	Opp	118		7-A-093		328170-35X
221ZPABX-*6	200	Opp	143		7-A-093(P)	328564X	328170-1X	221XPABX-*4	200	Opp	143		7-A-093		328170-35X
442LFABX-*6 (2)	250	Opp	103		7-A-093(P)	328564X	328170-76X	442KFABX-*4 (2)	250	Opp	103		7-A-093		7170-3X
442LLABX-*6 (3)	250	Opp	133		7-A-093(P)	328564X	328170-76X	442KLABX-*4 (3)	250	Opp	133		7-A-093		7170-3X
442LQABX-*6 (3)	225	Opp	144		7-A-093(P)	328564X	328170-76X	442KQABX-*4 (3)	225	Opp	144		7-A-093		7170-3X
442LRABX-*6 (3)	225	Opp	166		7-A-093(P)	328564X	328170-76X	442KRABX-*4 (3)	225	Opp	166		7-A-093		7170-3X
442LSABX-*6 (3)	200	Opp	198		7-A-093(P)	328564X	328170-76X	442KSABX-*4 (3)	200	Opp	198		7-A-093		7170-3X
442LUABX-*6 (3)	195	Opp	236		7-A-093(P)	328564X	328170-76X	442KUABX-*4 (3)	195	Opp	236		7-A-093		7170-3X
442LWABX-*6 (3)	175	Opp	278		7-A-093(P)	328564X	328170-76X	442KWABX-*4 (3)	175	Opp	278		7-A-093		7170-3X
442LXABX-*6 (3)	140	Opp	328		7-A-093(P)	328564X	328170-76X	442KXABX-*4 (3)	140	Opp	328		7-A-093		7170-3X
489XFABX-*6 (2)	250	Opp	103		8-A-062		328170-190X								
489XLABX-*6 (3)	250	Opp	133		8-A-062		328170-190X								
489XQABX-*6 (3)	225	Opp	144		8-A-062		328170-190X								
489XRABX-*6 (3)	225	Opp	166		8-A-062		328170-190X								
489XSABX-*6 (3)	200	Opp	198		8-A-062		328170-190X								
489XUABX-*6 (3)	195	Opp	236		8-A-062		328170-190X								
489XWABX-*6 (3)	175	Opp	278		8-A-062		328170-190X								
489XXABX-*6 (3)	140	Opp	328		8-A-062		328170-190X								
823XBABX-*6	500	Opp	72		8-A-062		328170-15X								
880XBABX-*6 (4)	500	Opp	72		8-A-062		328170-15X								
ONE SPEED - TWO GEAR - POWERSHIFT (AIR)															
236LDABX-*6 (3)	250	Opp	108		7-A-093(P)	328564X	328170-76X	236KDABX-*4 (3)	250	Opp	108		7-A-093		7170-3X
236LKABX-*6 (3)	250	Opp	138		7-A-093(P)	328564X	328170-76X	236KKABX-*4 (3)	250	Opp	138		7-A-093		7170-3X
236LQABX-*6 (3)	250	Opp	187		7-A-093(P)	328564X	328170-76X	236KQABX-*4 (3)	250	Opp	187		7-A-093		7170-3X
236LUABX-*6 (3)	225	Opp	213		7-A-093(P)	328564X	328170-76X	236KUABX-*4 (3)	225	Opp	213		7-A-093		7170-3X

Continued Next Page

CAUTION: Do not use geared adapters with 442 "A" and "C" ratios.

NOTE: Both openings located on bottom of transmission.

NOTE: The AK & XK output flanges can not be used with the "A" & "C" ratios on the 489 Series P.T.O.s due to mounting stud interference. Use a RA or RB rotatable flange for the XK and the RA for the AK flange.

(1) Gear and Shaft Kit No. KXA-2-P-563
(2) Input Gear Part No. 5-P-1076
(3) Input Gear Part No. 5-P-1001
(4) Input Gear Part No. 5-P-1099

1241-C	APO1000-4D
1241-D	ATO100-4D
AMO1000-4C	ATO1000-4C
AMO1000-4D	ATO1000-4D
APO1000-4C	

LEFT SIDE ONLY

TRANSMISSION GEAR DATA:
L.H. 8-Bolt Opening Gear REAR of Centerline
39 Teeth - SPUR
PITCH LINE TO APERTURE FACE:
.6750" (17.1500MM)

RIGHT SIDE ONLY

TRANSMISSION GEAR DATA:
R.H. 6-Bolt Opening Gear REAR of Centerline
39 Teeth - SPUR
PITCH LINE TO APERTURE FACE:
.9460" (24.0300MM)

Caution: Application Approval Required for P.T.O. Output Shaft Speeds Above 2500 R.P.M.

LEFT Side P.T.O. Model	Inter. Torq.	Dir. Rot.	Engine % Hi	Engine % Rev	Filler Block	Adapter Assy.	Stud Kit	RIGHT Side P.T.O. Model	Inter. Torq.	Dir. Rot.	Engine % Hi	Engine % Rev	Filler Block	Adapter Assy.	Stud Kit
ONE SPEED - FORWARD & REVERSE															
340SFABX-*4 (5)	200	Opp	94	99	7-A-187(P)	328564X	328170-94X	340SFABX-*4 (5)	200	Opp	94	99	7-A-187		328170-76X
352ZSABX-*6 (3)	140	Opp	201	260	7-A-093(P)	328564X	328170-76X	352XSABX-*4 (3)	140	Opp	201	260	7-A-093		7170-3X
863XBABX-*4	500	Opp	72	89	8-A-062		328170-15X								
ONE SPEED - DUAL SHAFT															
452ZSABX-*6 (3)	140	Opp	201		7-A-093(P)	328564X	328170-76X	452XSABX-*4 (3)	140	Opp	201		7-A-093		7170-3X
GEARED ADAPTERS															
628XABX-3AB					8-A-093		328170-190X	626KABX-4AB					7-A-093		7170-3X
								630KABX-4AB					7-A-093		7170-3X
								645KABX-4AB					7-A-093		7170-3X

CAUTION: Do not use geared adapters with 442 "A" and "C" ratios.

NOTE: Both openings located on bottom of transmission.

NOTE: The AK & XK output flanges can not be used with the "A" & "C" ratios on the 489 Series P.T.O.s due to mounting stud interference. Use a RA or RB rotatable flange for the XK and the RA for the AK flange.

(3) Input Gear Part No. 5-P-1001
(5) Input Gear Part No. 5-P-579

R8341-C	RP8341-K
R8341-F	
R8341-K	
RP8341-C	
RP8341-F	

RIGHT SIDE ONLY

TRANSMISSION GEAR DATA:
R.H. 8-Bolt Opening Gear REAR of Centerline
33 Teeth - R.H. HELIX

PITCH LINE TO APERTURE FACE:
.9000" (22.8600MM)

Caution: Application Approval Required for P.T.O. Output Shaft Speeds Above 2500 R.P.M.

P.T.O. Model	Inter. Torq.	Dir. Rot.	Engine % Hi	Engine % Rev	Filler Block	Adapter Assy.	Stud Kit	RIGHT Side P.T.O. Model	Inter. Torq.	Dir. Rot.	Engine % Hi	Engine % Rev	Filler Block	Adapter Assy.	Stud Kit
ONE SPEED - TWO GEAR - MECHANICAL SHIFT															
								442LLCRX-*4 (1)	250	Opp	152		7-A-032(P)	310778X	328170-79X
								442LQCRX-*4 (1)	225	Opp	163		7-A-032(P)	310778X	328170-79X
								442LRCRX-*4 (1)	225	Opp	189		7-A-032(P)	310778X	328170-79X
								442LSCRX-*4 (1)	200	Opp	225		7-A-032(P)	310778X	328170-79X
								442LUCRX-*4 (1)	195	Opp	268		7-A-032(P)	310778X	328170-79X
								442LWCRX-*4 (1)	175	Opp	315		7-A-032(P)	310778X	328170-79X
								442LXCRX-*4 (1)	140	Opp	373		7-A-032(P)	310778X	328170-79X
								823XBCRX-*4	500	Opp	76		8-A-165		328170-15X
ONE SPEED - FORWARD & REVERSE															
								863XBCRX-*4	500	Opp	76	94	8-A-165		328170-15X

NOTE: All speeds shown are with main transmission in direct drive. Other P.T.O. speeds available by dividing shown speeds by transmission ratios.

NOTE: No adapters are available for this application.

(1) Input Gear Part No. 5-P-1036

AMO610-4L	RP8341-D
ATO610-4L	RP8341-G
R8341-D	RP8341-L
R8341-G	
R8341-L	

RIGHT SIDE ONLY

TRANSMISSION GEAR DATA:
R.H. 8-Bolt Opening Gear REAR of Centerline

34 Teeth - R.H. HELIX

PITCH LINE TO APERTURE FACE:
.7900" (20.0700MM)

Caution: Application Approval Required for P.T.O. Output Shaft Speeds Above 2500 R.P.M.

ONE SPEED - TWO GEAR - MECHANICAL SHIFT

P.T.O. Model	Inter. Torq.	Dir. Rot.	Engine % Hi	Engine % Rev	Filler Block	Adapter Assy.	Stud Kit
442LLCRX-*4 (1)	250	Opp	156			328564X	Furnished
442LQCRX-*4 (1)	225	Opp	168			328564X	Furnished
442LRCRX-*4 (1)	225	Opp	195			328564X	Furnished
442LSCRX-*4 (1)	200	Opp	232			328564X	Furnished
442LUCRX-*4 (1)	195	Opp	276			328564X	Furnished
442LWCRX-*4 (1)	175	Opp	325			328564X	Furnished
442LXCRX-*4 (1)	140	Opp	384			328564X	Furnished
489ZLCRX-*4 (1)	250	Opp	156		8-A-093		328170-190X
489ZQCRX-*4 (1)	225	Opp	168		8-A-093		328170-190X
489ZRCRX-*4 (1)	225	Opp	195		8-A-093		328170-190X
489ZUCRX-*4 (1)	195	Opp	276		8-A-093		328170-190X
489ZWCRX-*4 (1)	175	Opp	325		8-A-093		328170-190X
489ZXCRX-*4 (1)	140	Opp	384		8-A-093		328170-190X
823XBCRX-*4	500	Opp	78		8-A-190 8-A-032		328170-14X

RIGHT Side P.T.O. Model	Inter. Torq.	Dir. Rot.	Engine % Hi	Engine % Rev	Filler Block	Adapter Assy.	Stud Kit

NOTE: No adapters are available for this application.

(1) Input Gear Part No. 5-P-1036

Parker Chelsea

Parker Hannifin Corporation
Chelsea Products Division
Olive Branch, MS 38654 USA

R8341-E

RIGHT SIDE ONLY

TRANSMISSION GEAR DATA:
R.H. 8-Bolt Opening Gear REAR of Centerline
35 Teeth - R.H. HELIX

PITCH LINE TO APERTURE FACE:
.6800" (17.2700MM)

Caution: Application Approval Required for P.T.O. Output Shaft Speeds Above 2500 R.P.M.

P.T.O. Model	Inter. Torq.	Dir. Rot.	Engine % Hi	Engine % Rev	Filler Block	Adapter Assy.	Stud Kit	RIGHT Side P.T.O. Model	Inter. Torq.	Dir. Rot.	Engine % Hi	Engine % Rev	Filler Block	Adapter Assy.	Stud Kit
ONE SPEED - TWO GEAR - MECHANICAL SHIFT															
								442LLCRX-*4 (1)	250	Opp	161		7-A-093(P)	328564X	328170-94X
								442LQCRX-*4 (1)	225	Opp	173		7-A-093(P)	328564X	328170-94X
								442LRCRX-*4 (1)	225	Opp	200		7-A-093(P)	328564X	328170-94X
								442LSCRX-*4 (1)	200	Opp	239		7-A-093(P)	328564X	328170-94X
								442LUCRX-*4 (1)	195	Opp	284		7-A-093(P)	328564X	328170-94X
								442LWCRX-*4 (1)	175	Opp	334		7-A-093(P)	328564X	328170-94X
								442LXCRX-*4 (1)	140	Opp	396		7-A-093(P)	328564X	328170-94X
								823XBCRX-*4	500	Opp	80		8-A-295		328170-14X
								880XBCRX-*4 (2)	500	Opp	80		8-A-295		328170-14X
ONE SPEED - FORWARD & REVERSE															
								863XBCRX-*4	500	Opp	80	100	8-A-295		328170-14X

NOTE: No adapters available for this application.

(1) Input Gear Part No. 5-P-1036
(2) Input Gear Part No. 5-P-1116

Parker Chelsea

Parker Hannifin Corporation
Chelsea Products Division
Olive Branch, MS 38654 USA

R8516
R8716
RP8716

RIGHT SIDE ONLY

TRANSMISSION GEAR DATA:
R.H. 6-Bolt Opening Gear FORWARD of Centerline
32 Teeth - R.H. HELIX

PITCH LINE TO APERTURE FACE:
1.3570" (34.4700MM)

Caution: Application Approval Required for P.T.O. Output Shaft Speeds Above 2500 R.P.M.

P.T.O. Model	Inter. Torq.	Dir. Rot.	Engine % Hi	Engine % Rev	Filler Block	Adapter Assy.	Stud Kit	RIGHT Side P.T.O. Model	Inter. Torq.	Dir. Rot.	Engine % Hi	Engine % Rev	Filler Block	Adapter Assy.	Stud Kit
ONE SPEED - TWO GEAR - MECHANICAL SHIFT															
								221ZEADX-*3	250	Opp	94				Furnished

NOTE: For Front Portion of 8516 Series Transmissions see Application No. SPR-39. For 8716 Series Transmissions see Application No. SPR-69.

NOTE: Speeds given are with Main Transmission in Direct Drive (4th speed) Other speeds may be obtained by dividing speed shown by transmission ratios. Example: R8516-3A 1st = (91 / 6.53 = 14%) 2nd = (91 / 3.42 = 27%) 3rd = (91 / 1.86 = 49%) 4th = (91 / 1.00 = 91%)

NOTE: No adapters available for this application.

Parker Hannifin Corporation
Chelsea Products Division
Olive Branch, MS 38654 USA

CM5052-B

CM5552-B

LEFT SIDE ONLY

TRANSMISSION GEAR DATA:

L.H. 6-Bolt Opening Gear FORWARD of Centerline

39 Teeth - R.H. HELIX

PITCH LINE TO APERTURE FACE:

.9340" (23.7236MM)

RIGHT SIDE ONLY

TRANSMISSION GEAR DATA:

R.H. 8-Bolt Opening Gear FORWARD of Centerline

39 Teeth - R.H. HELIX

PITCH LINE TO APERTURE FACE:

.6300" (16.0020MM)

Caution: Application Approval Required for P.T.O. Output Shaft Speeds Above 2500 R.P.M.

LEFT Side P.T.O. Model	Inter. Torq.	Dir. Rot.	Engine % Hi	Engine % Rev	Filler Block	Adapter Assy.	Stud Kit	RIGHT Side P.T.O. Model	Inter. Torq.	Dir. Rot.	Engine % Hi	Engine % Rev	Filler Block	Adapter Assy.	Stud Kit
ONE SPEED - SINGLE GEAR - MECHANICAL SHIFT															
								100XRBGX-*3 (1)	125	Eng	80		7-A-062(P)	310778X	Furnished
ONE SPEED - TWO GEAR - MECHANICAL SHIFT															
442KFBGX-*5 (2)	250	Opp	47		7-A-200		7170-4X	442XFBGX-*3 (2)	250	Opp	47		7-A-032(P)	328564X	Furnished
442KLBGX-*5 (3)	250	Opp	61		7-A-200		7170-4X	442XLBGX-*3 (3)	250	Opp	61		7-A-032(P)	328564X	Furnished
442KQBGX-*5 (3)	225	Opp	66		7-A-200		7170-4X	442XQBGX-*3 (3)	225	Opp	66		7-A-032(P)	328564X	Furnished
442KRBGX-*5 (3)	225	Opp	76		7-A-200		7170-4X	442XRBGX-*3 (3)	225	Opp	76		7-A-032(P)	328564X	Furnished
442KSBGX-*5 (3)	200	Opp	91		7-A-200		7170-4X	442XSBGX-*3 (3)	200	Opp	91		7-A-032(P)	328564X	Furnished
442KUBGX-*5 (3)	195	Opp	108		7-A-200		7170-4X	442XUBGX-*3 (3)	195	Opp	108		7-A-032(P)	328564X	Furnished
442KWBGX-*5 (3)	175	Opp	127		7-A-200		7170-4X	442XWBGX-*3 (3)	175	Opp	127		7-A-032(P)	328564X	Furnished
442KXBGX-*5 (3)	140	Opp	150		7-A-200		7170-4X	442XXBGX-*3 (3)	140	Opp	150		7-A-032(P)	328564X	Furnished
660KFBGX-*5 (4)	375	Opp	47		7-A-200		7170-4X	489XFBGX-*3 (2)	250	Opp	47		8-A-062		328170-190X
660KQBGX-*5 (5)	375	Opp	66		7-A-200		7170-4X	489XLBGX-*3 (3)	250	Opp	61		8-A-093 8-A-062		328170-190X
660KSBGX-*5 (6)	325	Opp	91		7-A-200		7170-4X	489XQBGX-*3 (3)	225	Opp	66		8-A-093 8-A-062		328170-190X
								489XRBGX-*3 (3)	225	Opp	76		8-A-093 8-A-062		328170-190X
								489XSBGX-*3 (3)	200	Opp	91		8-A-093 8-A-062		328170-190X
								489XUBGX-*3 (3)	195	Opp	108		8-A-093 8-A-062		328170-190X
								489XWBGX-*3 (3)	175	Opp	127		8-A-093 8-A-062		328170-190X
								489XXBGX-*3 (3)	140	Opp	150		8-A-093 8-A-062		328170-190X
								680XFBGX-*3 (4)	375	Opp	47		8-A-093 8-A-062		328170-190X
								680XQBGX-*3 (5)	375	Opp	66		8-A-093 8-A-062		328170-190X
								680XSBGX-*3 (6)	325	Opp	91		8-A-093 8-A-062		328170-190X
								880XBBGX-*3 (7)	500	Opp	33		8-A-093 8-A-165		328170-115X
								880XMBGX-*3 (8)	500	Opp	58		8-A-165		328170-115X

Continued Next Page

CAUTION: 660/680 Series: Applications above 1500 RPM output shaft speed, contact Chelsea Technical Service for approval

(1) Gear and Shaft Kit No. KXA-2-P-571
(2) Input Gear Part No. 5-P-1082
(3) Input Gear Part No. 5-P-1015
(4) Input Gear Part No. 5-P-1325
(5) Input Gear Part No. 5-P-1326
(6) Input Gear Part No. 5-P-1327
(7) Input Gear Part No. 5-P-1116
(8) Input Gear Part No. 5-P-1175

CM5052-B
CM5552-B

LEFT SIDE ONLY	RIGHT SIDE ONLY
TRANSMISSION GEAR DATA: L.H. 6-Bolt Opening Gear FORWARD of Centerline 39 Teeth - R.H. HELIX **PITCH LINE TO APERTURE FACE:** .9340" (23.7236MM)	**TRANSMISSION GEAR DATA:** R.H. 8-Bolt Opening Gear FORWARD of Centerline 39 Teeth - R.H. HELIX **PITCH LINE TO APERTURE FACE:** .6300" (16.0020MM)

Caution: Application Approval Required for P.T.O. Output Shaft Speeds Above 2500 R.P.M.

LEFT Side P.T.O. Model	Inter. Torq.	Dir. Rot.	Engine % Hi	Engine % Rev	Filler Block	Adapter Assy.	Stud Kit	RIGHT Side P.T.O. Model	Inter. Torq.	Dir. Rot.	Engine % Hi	Engine % Rev	Filler Block	Adapter Assy.	Stud Kit
ONE SPEED - TWO GEAR - MECHANICAL SHIFT															
								880XRBGX-*3 (9)	400	Opp	80		8-A-165		328170-115X
								880XTBGX-*3 (10)	350	Opp	103		8-A-165		328170-115X
ONE SPEED - TWO GEAR - POWERSHIFT (AIR)															
236KDBGX-*5 (3)	250	Opp	49		7-A-200	7170-4X		236XDBGX-*3 (3)	250	Opp	49		7-A-032(P)	328564X	Furnished
236KKBGX-*5 (3)	250	Opp	63		7-A-200	7170-4X		236XKBGX-*3 (3)	250	Opp	63		7-A-032(P)	328564X	Furnished
236KQBGX-*5 (3)	250	Opp	85		7-A-200	7170-4X		236XQBGX-*3 (3)	250	Opp	85		7-A-032(P)	328564X	Furnished
236KUBGX-*5 (3)	225	Opp	98		7-A-200	7170-4X		236XUBGX-*3 (3)	225	Opp	98		7-A-032(P)	328564X	Furnished
ONE SPEED - FORWARD & REVERSE															
340XFBGX-*5 (11)	200	Opp	43	45	7-A-140 (12) 7-A-165	7170-4X		340XFBGX-*5 (11)	200	Opp	43	45	7-A-140(P)(12)	328564X	Furnished
352XSBGX-*5 (3)	140	Opp	88	114	7-A-200	7170-4X		352XSBGX-*3 (3)	140	Opp	88	114	7-A-032(P)	328564X	Furnished
								863XBBGX-*5	500	Opp	33	40	8-A-165		328170-15X
ONE SPEED - DUAL SHAFT															
452XSBGX-*3 (3)	140	Opp	88		7-A-200	7170-4X		452XSBGX-*3 (3)	140	Opp	88		7-A-032(P)	328564X	Furnished
GEARED ADAPTERS															
626KBGX-4HB					7-A-200	7170-4X		628XBGX-3HB					8-A-190		328170-190X
630KBGX-3HB					7-A-200	7170-4X									
645KBGX-3HB					7-A-200	7170-4X									

CAUTION: 660/680 Series: Applications above 1500 RPM output shaft speed, contact Chelsea Technical Service for approval

(3) Input Gear Part No. 5-P-1015
(9) Input Gear Part No. 5-P-1117
(10) Input Gear Part No. 5-P-1177
(11) Input Gear Part No. 5-P-580
(12) Filler block furnished with P.T.O.

Parker Hannifin Corporation
Chelsea Products Division
Olive Branch, MS 38654 USA

CM5052-A
CM5052-C
CM5510-A
CM5552-A
CM5552-C

LEFT SIDE ONLY

TRANSMISSION GEAR DATA:
L.H. 6-Bolt Opening Gear FORWARD of Centerline
41 Teeth - R.H. HELIX

PITCH LINE TO APERTURE FACE:
.7220" (18.3388MM)

RIGHT SIDE ONLY

TRANSMISSION GEAR DATA:
R.H. 8-Bolt Opening Gear FORWARD of Centerline
41 Teeth - R.H. HELIX

PITCH LINE TO APERTURE FACE:
.4700" (11.9380MM)

Caution: Application Approval Required for P.T.O. Output Shaft Speeds Above 2500 R.P.M.

LEFT Side P.T.O. Model	Inter. Torq.	Dir. Rot.	Engine % Hi	Engine % Rev	Filler Block	Adapter Assy.	Stud Kit	RIGHT Side P.T.O. Model	Inter. Torq.	Dir. Rot.	Engine % Hi	Engine % Rev	Filler Block	Adapter Assy.	Stud Kit
ONE SPEED - SINGLE GEAR - MECHANICAL SHIFT															
								100XRBGX-*3 (1)	125	Eng	84		7-A-125(P)	328564X	Furnished
ONE SPEED - TWO GEAR - MECHANICAL SHIFT															
442KFBGX-*5 (2)	250	Opp	50		7-A-400		7170-5X	442KFBGX-*3 (2)	250	Opp	50		7-A-187(P)	328564X	7170-4X
442KLBGX-*5 (3)	250	Opp	64		7-A-400		7170-5X	442KLBGX-*3 (3)	250	Opp	64		7-A-187(P)	328564X	7170-4X
442KQBGX-*5 (3)	225	Opp	69		7-A-400		7170-5X	442KQBGX-*3 (3)	225	Opp	69		7-A-187(P)	328564X	7170-4X
442KRBGX-*5 (3)	225	Opp	80		7-A-400		7170-5X	442KRBGX-*3 (3)	225	Opp	80		7-A-187(P)	328564X	7170-4X
442KSBGX-*5 (3)	200	Opp	95		7-A-400		7170-5X	442KSBGX-*3 (3)	200	Opp	95		7-A-187(P)	328564X	7170-4X
442KUBGX-*5 (3)	195	Opp	114		7-A-400		7170-5X	442KUBGX-*3 (3)	195	Opp	114		7-A-187(P)	328564X	7170-4X
442KWBGX-*5 (3)	175	Opp	134		7-A-400		7170-5X	442KWBGX-*3 (3)	175	Opp	134		7-A-187(P)	328564X	7170-4X
442KXBGX-*5 (3)	140	Opp	158		7-A-400		7170-5X	442KXBGX-*3 (3)	140	Opp	158		7-A-187(P)	328564X	7170-4X
660KFBGX-*5 (4)	375	Opp	50		7-A-400		7170-5X	489XFBGX-*3 (2)	250	Opp	50		8-A-248		328170-192X
660KQBGX-*5 (5)	375	Opp	69		7-A-400		7170-5X	489XLBGX-*3 (3)	250	Opp	64		8-A-093 8-A-248		328170-192X
660KSBGX-*5 (6)	325	Opp	95		7-A-400		7170-5X	489XQBGX-*3 (3)	225	Opp	69		8-A-093 8-A-248		328170-192X
								489XRBGX-*3 (3)	225	Opp	80		8-A-093 8-A-248		328170-192X
								489XSBGX-*3 (3)	200	Opp	95		8-A-093 8-A-248		328170-192X
								489XUBGX-*3 (3)	195	Opp	114		8-A-093 8-A-248		328170-192X
								489XWBGX-*3 (3)	175	Opp	134		8-A-093 8-A-248		328170-192X
								489XXBGX-*3 (3)	140	Opp	158		8-A-093 8-A-248		328170-192X
								680XFBGX-*3 (4)	375	Opp	50		8-A-093 8-A-248		328170-192X
								680XQBGX-*3 (5)	375	Opp	69		8-A-093 8-A-248		328170-192X
								680XSBGX-*3 (6)	325	Opp	95		8-A-093 8-A-248		328170-192X
								823XBBGX-*3	500	Opp	34		8-A-093 8-A-295		328170-14X
								880XBBGX-*3 (7)	500	Opp	34		8-A-295		328170-117X

Continued Next Page

CAUTION: 660/680 Series: Applications above 1500 RPM output shaft speed, contact Chelsea Technical Service for approval.

(1) Gear and Shaft Kit No. KXA-2-P-571
(2) Input Gear Part No. 5-P-1082
(3) Input Gear Part No. 5-P-1015
(4) Input Gear Part No. 5-P-1325
(5) Input Gear Part No. 5-P-1326
(6) Input Gear Part No. 5-P-1327
(7) Input Gear Part No. 5-P-1116

CM5052-A
CM5052-C
CM5510-A
CM5552-A
CM5552-C

LEFT SIDE ONLY | **RIGHT SIDE ONLY**

TRANSMISSION GEAR DATA:
L.H. 6-Bolt Opening Gear FORWARD of Centerline
41 Teeth - R.H. HELIX
PITCH LINE TO APERTURE FACE:
.7220" (18.3388MM)

TRANSMISSION GEAR DATA:
R.H. 8-Bolt Opening Gear FORWARD of Centerline
41 Teeth - R.H. HELIX
PITCH LINE TO APERTURE FACE:
.4700" (11.9380MM)

Caution: Application Approval Required for P.T.O. Output Shaft Speeds Above 2500 R.P.M.

LEFT Side P.T.O. Model	Inter. Torq.	Dir. Rot.	Engine % Hi	Engine % Rev	Filler Block	Adapter Assy.	Stud Kit	RIGHT Side P.T.O. Model	Inter. Torq.	Dir. Rot.	Engine % Hi	Engine % Rev	Filler Block	Adapter Assy.	Stud Kit
ONE SPEED - TWO GEAR - MECHANICAL SHIFT															
								880XMBGX-*3 (8)	500	Opp	61		8-A-295		328170-117X
								880XRBGX-*3 (9)	400	Opp	84		8-A-295		328170-117X
								880XTBGX-*3 (10)	350	Opp	108		8-A-295		328170-117X
ONE SPEED - TWO GEAR - POWERSHIFT (AIR)															
236KDBGX-*5 (3)	250	Opp	52		7-A-400	7170-5X		236KDBGX-*3 (3)	250	Opp	52		7-A-187(P)	328564X	7170-4X
236KKBGX-*5 (3)	250	Opp	66		7-A-400	7170-5X		236KKBGX-*3 (3)	250	Opp	66		7-A-187(P)	328564X	7170-4X
236KQBGX-*5 (3)	250	Opp	90		7-A-400	7170-5X		236KQBGX-*3 (3)	250	Opp	90		7-A-187(P)	328564X	7170-4X
236KUBGX-*5 (3)	225	Opp	103		7-A-400	7170-5X		236KUBGX-*3 (3)	225	Opp	103		7-A-187(P)	328564X	7170-4X
ONE SPEED - FORWARD & REVERSE															
340XFBGX-*5 (11)	200	Opp	45	48	7-A-140 (12) 7-A-300	7170-5X		340XFBGX-*5 (11)	200	Opp	45	48	7-A-140(T)(12) 7-A-125(P)	328564X	Furnished
352XSBGX-*5 (3)	140	Opp	93	120	7-A-400	7170-5X		352XSBGX-*3 (3)	140	Opp	93	120	7-A-187(P)	328564X	7170-4X
								863XBBGX-*5	500	Opp	34	42	8-A-295		328170-14X
ONE SPEED - DUAL SHAFT															
452XSBGX-*3 (3)	140	Opp	93		7-A-400	7170-5X		452XSBGX-*3 (3)	140	Opp	93		7-A-187(P)	328564X	7170-4X
GEARED ADAPTERS															
626KBGX-4HB					7-A-400	7170-5X		628XBGX-3HB					8-A-375		328170-192X
630KBGX-4HB					7-A-400	7170-5X									
645KBGX-4HB					7-A-400	7170-5X									

CAUTION: 660/680 Series: Applications above 1500 RPM output shaft speed, contact Chelsea Technical Service for approval.

(3) Input Gear Part No. 5-P-1015
(8) Input Gear Part No. 5-P-1175
(9) Input Gear Part No. 5-P-1117
(10) Input Gear Part No. 5-P-1177
(11) Input Gear Part No. 5-P-580
(12) Filler block furnished with P.T.O.

Parker Hannifin Corporation
Chelsea Products Division
Olive Branch, MS 38654 USA

CM5052-D
CM5252-A
CM5552-D
CM5852-A

LEFT SIDE ONLY

TRANSMISSION GEAR DATA:
L.H. 6-Bolt Opening Gear FORWARD of Centerline
43 Teeth - R.H. HELIX

PITCH LINE TO APERTURE FACE:
.5600" (14.2240MM)

RIGHT SIDE ONLY

TRANSMISSION GEAR DATA:
R.H. 8-Bolt Opening Gear FORWARD of Centerline
43 Teeth - R.H. HELIX

PITCH LINE TO APERTURE FACE:
.2900" (7.3660MM)

Caution: Application Approval Required for P.T.O. Output Shaft Speeds Above 2500 R.P.M.

LEFT Side P.T.O. Model	Inter. Torq.	Dir. Rot.	Engine % Hi	Engine % Rev	Filler Block	Adapter Assy.	Stud Kit	RIGHT Side P.T.O. Model	Inter. Torq.	Dir. Rot.	Engine % Hi	Engine % Rev	Filler Block	Adapter Assy.	Stud Kit
ONE SPEED - SINGLE GEAR - MECHANICAL SHIFT															
								100XRBGX-*3 (1)	125	Eng	96		7-A-300(P)	328564X	7170-13X
ONE SPEED - TWO GEAR - MECHANICAL SHIFT															
442KFBGX-*5 (2)	250	Opp	57		7-A-500		7170-6X	442KFBGX-*3 (2)	250	Opp	57		7-A-300(P)	328564X	7170-5X
442KLBGX-*5 (3)	250	Opp	73		7-A-500		7170-6X	442KLBGX-*3 (3)	250	Opp	73		7-A-300(P)	328564X	7170-5X
442KQBGX-*5 (3)	225	Opp	79		7-A-500		7170-6X	442KQBGX-*3 (3)	225	Opp	79		7-A-300(P)	328564X	7170-5X
442KRBGX-*5 (3)	225	Opp	92		7-A-500		7170-6X	442KRBGX-*3 (3)	225	Opp	92		7-A-300(P)	328564X	7170-5X
442KSBGX-*5 (3)	200	Opp	109		7-A-500		7170-6X	442KSBGX-*3 (3)	200	Opp	109		7-A-300(P)	328564X	7170-5X
442KUBGX-*5 (3)	195	Opp	130		7-A-500		7170-6X	442KUBGX-*3 (3)	195	Opp	130		7-A-300(P)	328564X	7170-5X
442KWBGX-*5 (3)	175	Opp	153		7-A-500		7170-6X	442KWBGX-*3 (3)	175	Opp	153		7-A-300(P)	328564X	7170-5X
442KXBGX-*5 (3)	140	Opp	181		7-A-500		7170-6X	442KXBGX-*3 (3)	140	Opp	181		7-A-300(P)	328564X	7170-5X
660KFBGX-*5 (4)	375	Opp	57		7-A-500		7170-6X	489XFBGX-*3 (2)	250	Opp	57		8-A-375		328170-192X
660KQBGX-*5 (5)	375	Opp	79		7-A-500		7170-6X	489XLBGX-*3 (3)	250	Opp	73		8-A-093 8-A-375		328170-192X
660KSBGX-*5 (6)	325	Opp	109		7-A-500		7170-6X	489XQBGX-*3 (3)	225	Opp	79		8-A-093 8-A-375		328170-192X
								489XRBGX-*3 (3)	225	Opp	92		8-A-093 8-A-375		328170-192X
								489XSBGX-*3 (3)	200	Opp	109		8-A-093 8-A-375		328170-192X
								489XUBGX-*3 (3)	195	Opp	130		8-A-093 8-A-375		328170-192X
								489XWBGX-*3 (3)	175	Opp	153		8-A-093 8-A-375		328170-192X
								489XXBGX-*3 (3)	140	Opp	181		8-A-093 8-A-375		328170-192X
								680XFBGX-*3 (4)	375	Opp	57		8-A-093 8-A-375		328170-192X
								680XQBGX-*3 (5)	375	Opp	79		8-A-093 8-A-375		328170-192X
								680XSBGX-*3 (6)	325	Opp	109		8-A-093 8-A-375		328170-192X
								880XBBGX-*3 (7)	500	Opp	39		8-A-093 8-A-500		328170-16X
								880XMBGX-*3 (8)	500	Opp	70		8-A-500		328170-16X

Continued Next Page

CAUTION: 660/680 Series: Applications above 1500 RPM output shaft speed, contact Chelsea Technical Service for approval.

NOTE: For P.T.O. speeds on CM5052D transmission, multiply speeds shown by .92.

(1) Gear and Shaft Kit No. KXA-2-P-571
(2) Input Gear Part No. 5-P-1082
(3) Input Gear Part No. 5-P-1015
(4) Input Gear Part No. 5-P-1325
(5) Input Gear Part No. 5-P-1326
(6) Input Gear Part No. 5-P-1327
(7) Input Gear Part No. 5-P-1116
(8) Input Gear Part No. 5-P-1175

Parker Hannifin Corporation
Chelsea Products Division
Olive Branch, MS 38654 USA

CM5052-D
CM5252-A
CM5552-D
CM5852-A

LEFT SIDE ONLY

TRANSMISSION GEAR DATA:
L.H. 6-Bolt Opening Gear FORWARD of Centerline
43 Teeth - R.H. HELIX
PITCH LINE TO APERTURE FACE:
.5600" (14.2240MM)

RIGHT SIDE ONLY

TRANSMISSION GEAR DATA:
R.H. 8-Bolt Opening Gear FORWARD of Centerline
43 Teeth - R.H. HELIX
PITCH LINE TO APERTURE FACE:
.2900" (7.3660MM)

Caution: Application Approval Required for P.T.O. Output Shaft Speeds Above 2500 R.P.M.

LEFT Side P.T.O. Model	Inter. Torq.	Dir. Rot.	Engine % Hi	Engine % Rev	Filler Block	Adapter Assy.	Stud Kit	RIGHT Side P.T.O. Model	Inter. Torq.	Dir. Rot.	Engine % Hi	Engine % Rev	Filler Block	Adapter Assy.	Stud Kit
ONE SPEED - TWO GEAR - MECHANICAL SHIFT															
								880XRBGX-*3 (9)	400	Opp	96		8-A-500		328170-16X
								880XTBGX-*3 (10)	350	Opp	124		8-A-500		328170-16X
ONE SPEED - TWO GEAR - POWERSHIFT (AIR)															
236KDBGX-*5 (3)	250	Opp	59		7-A-500	7170-6X		236KDBGX-*3 (3)	250	Opp	59		7-A-300(P)	328564X	7170-5X
236KKBGX-*5 (3)	250	Opp	76		7-A-500	7170-6X		236KKBGX-*3 (3)	250	Opp	76		7-A-300(P)	328564X	7170-5X
236KQBGX-*5 (3)	250	Opp	103		7-A-500	7170-6X		236KQBGX-*3 (3)	250	Opp	103		7-A-300(P)	328564X	7170-5X
236KUBGX-*5 (3)	225	Opp	118		7-A-500	7170-6X		236KUBGX-*3 (3)	225	Opp	118		7-A-300(P)	328564X	7170-5X
ONE SPEED - FORWARD & REVERSE															
340XFBGX-*5 (11)	200	Opp	52	54	7-A-140 (12) 7-A-500(P)	7170-6X		340XFBGX-*5 (11)	200	Opp	52	54	7-A-140 (12) 7-A-300(P)	328564X	7170-5X
352XSBGX-*5 (3)	140	Opp	106	137	7-A-500	7170-6X		352XSBGX-*3 (3)	140	Opp	106	137	7-A-300(P)	328564X	7170-5X
								863XBBGX-*5	500	Opp	39	48	8-A-500		328170-16X
ONE SPEED - DUAL SHAFT															
452XSBGX-*3 (3)	140	Opp	106		7-A-500	7170-6X		452XSBGX-*3 (3)	140	Opp	106		7-A-300(P)	328564X	7170-5X
GEARED ADAPTERS															
626KBGX-4HB					7-A-500	7170-6X		628XBGX-3HB					8-A-500 8-A-032		328170-192X
630KBGX-4HB					7-A-500	7170-6X									
645KBGX-4HB					7-A-500	7170-6X									

CAUTION: 660/680 Series: Applications above 1500 RPM output shaft speed, contact Chelsea Technical Service for approval.

NOTE: For P.T.O. speeds on CM5052D transmission, multiply speeds shown by .92.

(3) Input Gear Part No. 5-P-1015
(9) Input Gear Part No. 5-P-1117
(10) Input Gear Part No. 5-P-1177
(11) Input Gear Part No. 5-P-580
(12) Filler block furnished with P.T.O.

1010-3A	1414-3A	PSO165-12B
1010-5A	1420-3A	PSO85-14-4L
1410-3A	1420-3B	
1412-3A	PSO140-12B	
1414-3A	PSO140-14A	

BOTTOM SIDE ONLY

TRANSMISSION GEAR DATA:
BOT 8-Bolt Opening Gear FORWARD of Centerline
54 Teeth - SPUR
PITCH LINE TO APERTURE FACE:
.5660" (14.3800MM)

RIGHT SIDE ONLY

TRANSMISSION GEAR DATA:
R.H. 6-Bolt Opening Gear FORWARD of Centerline
54 Teeth - SPUR
PITCH LINE TO APERTURE FACE:
.7210" (18.3100MM)

Caution: Application Approval Required for P.T.O. Output Shaft Speeds Above 2500 R.P.M.

BOTTOM Side P.T.O. Model	Inter. Torq.	Dir. Rot.	Engine % Hi	Engine % Rev	Filler Block	Adapter Assy.	Stud Kit	RIGHT Side P.T.O. Model	Inter. Torq.	Dir. Rot.	Engine % Hi	Engine % Rev	Filler Block	Adapter Assy.	Stud Kit
ONE SPEED - SINGLE GEAR - MECHANICAL SHIFT															
100XRAHX-*3 (1)	125	Eng	141			328564X	Furnished	100XRAHX-*3 (1)	125	Eng	141		7-A-300		328291-3X
812XKAHX-*3	400	Eng	94		8-A-165		Furnished								
ONE SPEED - TWO GEAR - MECHANICAL SHIFT															
221XCAHX-*3	250	Opp	63		7-A-032 (2)	328564X	Furnished	221XCAHX-*3	250	Opp	63		7-A-350 7-A-032 (2)		328170-35X
221XLAHX-*3	200	Opp	97		7-A-062(P)	310778X	Furnished	221XEAHX-*3	250	Opp	72		7-A-300		328170-35X
221XPAHX-*3	200	Opp	117		7-A-062(P)	310778X	Furnished	221XLAHX-*3	200	Opp	97		7-A-300		328170-35X
442XAAHX-*3 (3)	250	Opp	55		7-A-062(P)	310778X	Furnished	221XPAHX-*3	200	Opp	117		7-A-300		328170-35X
442XCAHX-*3 (4)	250	Opp	70		7-A-062(P)	310778X	Furnished	442KAAHX-*3 (3)	250	Opp	55		7-A-300		7170-5X
442XFAHX-*3 (5)	250	Opp	87		7-A-062(P)	310778X	Furnished	442KCAHX-*3 (4)	250	Opp	70		7-A-300		7170-5X
442XHAHX-*3 (6)	250	Opp	101		7-A-062(P)	310778X	Furnished	442KFAHX-*3 (5)	250	Opp	87		7-A-300		7170-5X
442XLAHX-*3 (7)	250	Opp	113		7-A-062(P)	310778X	Furnished	442KHAHX-*3 (6)	250	Opp	101		7-A-300		7170-5X
442XQAHX-*3 (7)	225	Opp	121		7-A-062(P)	310778X	Furnished	442KLAHX-*3 (7)	250	Opp	113		7-A-300		7170-5X
442XRAHX-*3 (7)	225	Opp	141		7-A-062(P)	310778X	Furnished	442KQAHX-*3 (7)	225	Opp	121		7-A-300		7170-5X
442XSAHX-*3 (7)	200	Opp	167		7-A-062(P)	310778X	Furnished	442KRAHX-*3 (7)	225	Opp	141		7-A-300		7170-5X
442XUAHX-*3 (7)	195	Opp	199		7-A-062(P)	310778X	Furnished	442KSAHX-*3 (7)	200	Opp	167		7-A-300		7170-5X
442XWAHX-*3 (7)	175	Opp	235		7-A-062(P)	310778X	Furnished	442KUAHX-*3 (7)	195	Opp	199		7-A-300		7170-5X
442XXAHX-*3 (7)	140	Opp	278		7-A-062(P)	310778X	Furnished	442KWAHX-*3 (7)	175	Opp	235		7-A-300		7170-5X
489XAAHX-*3 (3)	250	Opp	55		8-A-062 8-A-093		328170-8X	442KXAHX-*3 (7)	140	Opp	278		7-A-300		7170-5X
489XCAHX-*3 (4)	250	Opp	70		8-A-062 8-A-093		328170-8X	660KFAHX-*3 (8)	375	Opp	87		7-A-300		7170-5X
489XFAHX-*3 (5)	250	Opp	87		8-A-062 8-A-093		328170-8X	660KQAHX-*3 (9)	375	Opp	121		7-A-300		7170-5X
489XHAHX-*3 (6)	250	Opp	101		8-A-062 8-A-093		328170-8X	660KSAHX-*3 (10)	325	Opp	167		7-A-300		7170-5X
489XLAHX-*3 (7)	250	Opp	113		8-A-062 8-A-093		328170-8X								
489XQAHX-*3 (7)	225	Opp	121		8-A-062 8-A-093		328170-8X								
489XRAHX-*3 (7)	225	Opp	141		8-A-062 8-A-093		328170-8X								

Continued Next Page

CAUTION: Do not use geared adapters with 442 "A" and "C" ratios.

CAUTION: 660/680 Series: Applications above 1500 RPM output shaft speed, contact Chelsea Technical Service for approval.

NOTE: Speeds shown are with transmission in high range - for speeds in low range multiply speeds shown by .77

NOTE: The AK & XK output flanges can not be used with the "A" & "C" ratios on the 489 Series P.T.O.s due to mounting stud interference. Use a RA or RB rotatable flange for the XK and the RA for the AK flange.

NOTE: If Ordering the 230/231 Series with the Shaft Brake Option, order the "BA" Output for Automatic Transmissions and the "BD" Output for Manual Transmissions.

(1) Gear and Shaft Kit No. KXA-2-P-565
(2) Filler block furnished with P.T.O. but not required
(3) Input Gear Part No. 5-P-1280
(4) Input Gear Part No. 5-P-1287
(5) Input Gear Part No. 5-P-1077
(6) Input Gear Part No. 5-P-1364
(7) Input Gear Part No. 5-P-1004
(8) Input Gear Part No. 5-P-1242
(9) Input Gear Part No. 5-P-1246
(10) Input Gear Part No. 5-P-1322

Parker Hannifin Corporation
Chelsea Products Division
Olive Branch, MS 38654 USA

1010-3A	1414-3A	PSO165-12B
1010-5A	1420-3A	PSO85-14-4L
1410-3A	1420-3B	
1412-3A	PSO140-12B	
1414-3A	PSO140-14A	

BOTTOM SIDE ONLY

TRANSMISSION GEAR DATA:
BOT 8-Bolt Opening Gear FORWARD of Centerline
54 Teeth - SPUR
PITCH LINE TO APERTURE FACE:
.5660" (14.3800MM)

RIGHT SIDE ONLY

TRANSMISSION GEAR DATA:
R.H. 6-Bolt Opening Gear FORWARD of Centerline
54 Teeth - SPUR
PITCH LINE TO APERTURE FACE:
.7210" (18.3100MM)

Caution: Application Approval Required for P.T.O. Output Shaft Speeds Above 2500 R.P.M.

BOTTOM Side P.T.O. Model	Inter. Torq.	Dir. Rot.	Engine % Hi	Engine % Rev	Filler Block	Adapter Assy.	Stud Kit	RIGHT Side P.T.O. Model	Inter. Torq.	Dir. Rot.	Engine % Hi	Engine % Rev	Filler Block	Adapter Assy.	Stud Kit
ONE SPEED - TWO GEAR - MECHANICAL SHIFT															
489XSAHX-*3 (7)	200	Opp	167		8-A-062 8-A-093		328170-8X								
489XUAHX-*3 (7)	195	Opp	199		8-A-062 8-A-093		328170-8X								
489XWAHX-*3 (7)	175	Opp	235		8-A-062 8-A-093		328170-8X								
489XXAHX-*3 (7)	140	Opp	278		8-A-062 8-A-093		328170-8X								
680XFAHX-*3 (8)	375	Opp	87		8-A-062 8-A-093		328170-8X								
680XQAHX-*3 (9)	375	Opp	121		8-A-062 8-A-093		328170-8X								
680XSAHX-*3 (10)	325	Opp	167		8-A-062 8-A-093		328170-8X								
823XBAHX-*3 (11)	500	Opp	59		8-A-165		328170-14X								
823XJAHX-*3 (12)	500	Opp	90		8-A-165		328170-14X								
823XMAHX-*3 (13)	500	Opp	105		8-A-165		328170-14X								
823XRAHX-*3 (14)	400	Opp	146		8-A-165		328170-14X								
880XBAHX-*3 (15)	500	Opp	59		8-A-165		328170-14X								
880XDAHX-*3 (16)	500	Opp	70		8-A-165		328170-14X								
880XGAHX-*3 (17)	500	Opp	76		8-A-165		328170-14X								
880XJAHX-*3 (18)	500	Opp	90		8-A-165		328170-14X								
880XMAHX-*3 (19)	500	Opp	105		8-A-165		328170-14X								
880XQAHX-*3 (20)	450	Opp	124		8-A-165		328170-14X								
880XRAHX-*3 (21)	400	Opp	146		8-A-165		328170-14X								
880XTAHX-*3 (22)	350	Opp	187		8-A-165		328170-14X								
ONE SPEED - TWO GEAR - POWERSHIFT (AIR)															
230XAAJX-*3	250	Opp	46		328564X	Furnished		230XAAJX-*3	250	Opp	46		7-A-300		328170-172X
230XBAJX-*3	250	Opp	60		328564X	Furnished		230XBAJX-*3	250	Opp	60		7-A-300		328170-172X
230XDAJX-*3	250	Opp	69		328564X	Furnished		230XDAJX-*3	250	Opp	69		7-A-300		328170-172X
230XKAJX-*3	250	Opp	93		328564X	Furnished		230XKAJX-*3	250	Opp	93		7-A-300		328170-172X
230XQAJX-*3	250	Opp	124		328564X	Furnished		230XQAJX-*3	250	Opp	124		7-A-300		328170-172X
230XUAJX-*3	225	Opp	199		328564X	Furnished		230XUAJX-*3	225	Opp	199		7-A-300		328170-172X

Continued Next Page

CAUTION: Do not use geared adapters with 442 "A" and "C" ratios.

CAUTION: 660/680 Series: Applications above 1500 RPM output shaft speed, contact Chelsea Technical Service for approval.

NOTE: Speeds shown are with transmission in high range - for speeds in low range multiply speeds shown by .77

NOTE: The AK & XK output flanges can not be used with the "A" & "C" ratios on the 489 Series P.T.O.s due to mounting stud interference. Use a RA or RB rotatable flange for the XK and the RA for the AK flange.

NOTE: If Ordering the 230/231 Series with the Shaft Brake Option, order the "BA" Output for Automatic Transmissions and the "BD" Output for Manual Transmissions.

(7) Input Gear Part No. 5-P-1004
(8) Input Gear Part No. 5-P-1242
(9) Input Gear Part No. 5-P-1246
(10) Input Gear Part No. 5-P-1322
(11) Input Gear Part No. 5-P-285
(12) Input Gear Part No. 5-P-325
(13) Input Gear Part No. 5-P-283
(14) Input Gear Part No. 5-P-721
(15) Input Gear Part No. 5-P-1100
(16) Input Gear Part No. 5-P-1101
(17) Input Gear Part No. 5-P-1135
(18) Input Gear Part No. 5-P-1102
(19) Input Gear Part No. 5-P-1103
(20) Input Gear Part No. 5-P-1385
(21) Input Gear Part No. 5-P-1104
(22) Input Gear Part No. 5-P-1105

Parker Hannifin Corporation
Chelsea Products Division
Olive Branch, MS 38654 USA

1010-3A	1414-3A	PSO165-12B
1010-5A	1420-3A	PSO85-14-4L
1410-3A	1420-3B	
1412-3A	PSO140-12B	
1414-3A	PSO140-14A	

BOTTOM SIDE ONLY

TRANSMISSION GEAR DATA:
BOT 8-Bolt Opening Gear FORWARD of Centerline
54 Teeth - SPUR

PITCH LINE TO APERTURE FACE:
.5660" (14.3800MM)

RIGHT SIDE ONLY

TRANSMISSION GEAR DATA:
R.H. 6-Bolt Opening Gear FORWARD of Centerline
54 Teeth - SPUR

PITCH LINE TO APERTURE FACE:
.7210" (18.3100MM)

Caution: Application Approval Required for P.T.O. Output Shaft Speeds Above 2500 R.P.M.

BOTTOM Side P.T.O. Model	Inter. Torq.	Dir. Rot.	Engine % Hi	Engine % Rev	Filler Block	Adapter Assy.	Stud Kit	RIGHT Side P.T.O. Model	Inter. Torq.	Dir. Rot.	Engine % Hi	Engine % Rev	Filler Block	Adapter Assy.	Stud Kit
ONE SPEED - TWO GEAR - POWERSHIFT (AIR)															
236XDAHX-*3 (7)	250	Opp	92		7-A-062(P)	310778X	Furnished	236KDAHX-*3 (7)	250	Opp	92		7-A-300		7170-5X
236XKAHX-*3 (7)	250	Opp	117		7-A-062(P)	310778X	Furnished	236KKAHX-*3 (7)	250	Opp	117		7-A-300		7170-5X
236XQAHX-*3 (7)	250	Opp	158		7-A-062(P)	310778X	Furnished	236KQAHX-*3 (7)	250	Opp	158		7-A-300		7170-5X
236XUAHX-*3 (7)	225	Opp	181		7-A-062(P)	310778X	Furnished	236KUAHX-*3 (7)	225	Opp	181		7-A-300		7170-5X
885XBAHX-*3 (15)	500	Opp	59		8-A-165		328170-14X								
885XGAHX-*3 (17)	500	Opp	76		8-A-165		328170-14X								
885XJAHX-*3 (18)	500	Opp	90		8-A-165		328170-14X								
885XMAHX-*3 (19)	500	Opp	105		8-A-165		328170-14X								
ONE SPEED - FORWARD & REVERSE															
340XFAHX-*5 (23)	200	Opp	76	80	7-A-140(P)(24)	328564X	Furnished	340XFAHX-*5 (23)	200	Opp	76	80	7-A-140 (24) 7-A-270		7170-5X
352XSAHX-*3 (7)	140	Opp	170	219	7-A-062(P)	310778X	Furnished	352XSAHX-*3 (7)	140	Opp	170	219	7-A-300		7170-5X
863XBAHX-*5	500	Opp	59	73	8-A-165		328170-14X								
ONE SPEED - DUAL SHAFT															
452XSAHX-*3 (7)	140	Opp	170		7-A-062(P)	310778X	Furnished	452XSAHX-*3 (7)	140	Opp	170		7-A-300		7170-5X
GEARED ADAPTERS															
628XAHX-3AH					8-A-190		328170-8X	626KAHX-4AH					7-A-300		7170-5X
								630KAHX-3AH					7-A-300		7170-5X
								645KAHX-3AH					7-A-300		7170-5X

CAUTION: Do not use geared adapters with 442 "A" and "C" ratios.

CAUTION: 660/680 Series: Applications above 1500 RPM output shaft speed, contact Chelsea Technical Service for approval.

NOTE: Speeds shown are with transmission in high range - for speeds in low range multiply speeds shown by .77

NOTE: The AK & XK output flanges can not be used with the "A" & "C" ratios on the 489 Series P.T.O.s due to mounting stud interference. Use a RA or RB rotatable flange for the XK and the RA for the AK flange.

NOTE: If Ordering the 230/231 Series with the Shaft Brake Option, order the "BA" Output for Automatic Transmissions and the "BD" Output for Manual Transmissions.

(7) Input Gear Part No. 5-P-1004
(15) Input Gear Part No. 5-P-1100
(17) Input Gear Part No. 5-P-1135
(18) Input Gear Part No. 5-P-1102
(19) Input Gear Part No. 5-P-1103
(23) Input Gear Part No. 5-P-581

(24) Filler block furnished with P.T.O.

1214-3A
1214-5A

BOTTOM SIDE ONLY

TRANSMISSION GEAR DATA:
BOT 8-Bolt Opening Gear FORWARD of Centerline
54 Teeth - SPUR
PITCH LINE TO APERTURE FACE:
.5660" (14.3700MM)

RIGHT SIDE ONLY

TRANSMISSION GEAR DATA:
R.H. 6-Bolt Opening Gear FORWARD of Centerline
54 Teeth - SPUR
PITCH LINE TO APERTURE FACE:
.7210" (18.3100MM)

Caution: Application Approval Required for P.T.O. Output Shaft Speeds Above 2500 R.P.M.

BOTTOM Side P.T.O. Model	Inter. Torq.	Dir. Rot.	Engine % Hi	Engine % Rev	Filler Block	Adapter Assy.	Stud Kit	RIGHT Side P.T.O. Model	Inter. Torq.	Dir. Rot.	Engine % Hi	Engine % Rev	Filler Block	Adapter Assy.	Stud Kit
ONE SPEED - SINGLE GEAR - MECHANICAL SHIFT															
100XRAHX-*3 (1)	125	Eng	128			328564X	Furnished	100XRAHX-*3 (1)	125	Eng	128		7-A-300		328291-3X
812XKAHX-*3	400	Eng	86		8-A-165		Furnished								
ONE SPEED - TWO GEAR - MECHANICAL SHIFT															
221XCAHX-*3	250	Opp	57		7-A-032 (2)	328564X	Furnished	221XCAHX-*3	250	Opp	57		7-A-350 7-A-032 (2)		328170-35X
221XEAHX-*3	250	Opp	66		7-A-062(P)	310778X	Furnished	221XEAHX-*3	250	Opp	66		7-A-300		328170-35X
221XLAHX-*3	200	Opp	89		7-A-062(P)	310778X	Furnished	221XLAHX-*3	200	Opp	89		7-A-300		328170-35X
221XPAHX-*3	200	Opp	107		7-A-062(P)	310778X	Furnished	221XPAHX-*3	200	Opp	107		7-A-300		328170-35X
442XAAHX-*3 (3)	250	Opp	50		7-A-062(P)	310778X	Furnished	442KAAHX-*3 (3)	250	Opp	50		7-A-300		7170-5X
442XCAHX-*3 (4)	250	Opp	64		7-A-062(P)	310778X	Furnished	442KCAHX-*3 (4)	250	Opp	64		7-A-300		7170-5X
442XFAHX-*3 (5)	250	Opp	80		7-A-062(P)	310778X	Furnished	442KFAHX-*3 (5)	250	Opp	80		7-A-300		7170-5X
442XHAHX-*3 (6)	250	Opp	93		7-A-062(P)	310778X	Furnished	442KHAHX-*3 (6)	250	Opp	93		7-A-300		7170-5X
442XLAHX-*3 (7)	250	Opp	103		7-A-062(P)	310778X	Furnished	442KLAHX-*3 (7)	250	Opp	103		7-A-300		7170-5X
442XQAHX-*3 (7)	225	Opp	111		7-A-062(P)	310778X	Furnished	442KQAHX-*3 (7)	225	Opp	111		7-A-300		7170-5X
442XRAHX-*3 (7)	225	Opp	128		7-A-062(P)	310778X	Furnished	442KRAHX-*3 (7)	225	Opp	128		7-A-300		7170-5X
442XSAHX-*3 (7)	200	Opp	153		7-A-062(P)	310778X	Furnished	442KSAHX-*3 (7)	200	Opp	153		7-A-300		7170-5X
442XUAHX-*3 (7)	195	Opp	182		7-A-062(P)	310778X	Furnished	442KWAHX-*3 (7)	175	Opp	214		7-A-300		7170-5X
442XWAHX-*3 (7)	175	Opp	214		7-A-062(P)	310778X	Furnished	442KXAHX-*3 (7)	140	Opp	254		7-A-300		7170-5X
442XXAHX-*3 (7)	140	Opp	254		7-A-062(P)	310778X	Furnished	660KFAHX-*3 (8)	375	Opp	80		7-A-300		7170-5X
489XAAHX-*3 (3)	250	Opp	50		8-A-062 8-A-093		328170-8X	660KQAHX-*3 (9)	375	Opp	111		7-A-300		7170-5X
489XCAHX-*3 (4)	250	Opp	64		8-A-062 8-A-093		328170-8X	660KSAHX-*3 (10)	325	Opp	153		7-A-300		7170-5X
489XFAHX-*3 (5)	250	Opp	80		8-A-062 8-A-093		328170-8X								
489XHAHX-*3 (6)	250	Opp	93		8-A-062 8-A-093		328170-8X								
489XLAHX-*3 (7)	250	Opp	103		8-A-062 8-A-093		328170-8X								
489XQAHX-*3 (7)	225	Opp	111		8-A-062 8-A-093		328170-8X								
489XRAHX-*3 (7)	225	Opp	128		8-A-062 8-A-093		328170-8X								

Continued Next Page

CAUTION: Do not use geared adapters with 442 "A" and "C" ratios.

CAUTION: 660/680 Series: Applications above 1500 RPM output shaft speed, contact Chelsea Technical Service for approval.

NOTE: Speeds shown are with transmission in high range. For speeds in low range, multiply speed shown by .84.

NOTE: The AK & XK output flanges can not be used with the "A" & "C" ratios on the 489 Series P.T.O.s due to mounting stud interference. Use a RA or RB rotatable flange for the XK and the RA for the AK flange.

NOTE: If Ordering the 230/231 Series with the Shaft Brake Option, order the "BA" Output for Automatic Transmissions and the "BD" Output for Manual Transmissions.

(1) Gear and Shaft Kit No. KXA-2-P-565
(2) Filler block furnished with P.T.O. but not required
(3) Input Gear Part No. 5-P-1280
(4) Input Gear Part No. 5-P-1287
(5) Input Gear Part No. 5-P-1077
(6) Input Gear Part No. 5-P-1364
(7) Input Gear Part No. 5-P-1004
(8) Input Gear Part No. 5-P-1242
(9) Input Gear Part No. 5-P-1246
(10) Input Gear Part No. 5-P-1322

1214-3A
1214-5A

BOTTOM SIDE ONLY

TRANSMISSION GEAR DATA:
BOT 8-Bolt Opening Gear FORWARD of Centerline
54 Teeth - SPUR

PITCH LINE TO APERTURE FACE:
.5660" (14.3700MM)

RIGHT SIDE ONLY

TRANSMISSION GEAR DATA:
R.H. 6-Bolt Opening Gear FORWARD of Centerline
54 Teeth - SPUR

PITCH LINE TO APERTURE FACE:
.7210" (18.3100MM)

Caution: Application Approval Required for P.T.O. Output Shaft Speeds Above 2500 R.P.M.

BOTTOM Side P.T.O. Model	Inter. Torq.	Dir. Rot.	Engine % Hi	Engine % Rev	Filler Block	Adapter Assy.	Stud Kit	RIGHT Side P.T.O. Model	Inter. Torq.	Dir. Rot.	Engine % Hi	Engine % Rev	Filler Block	Adapter Assy.	Stud Kit
ONE SPEED - TWO GEAR - MECHANICAL SHIFT															
489XSAHX-*3 (7)	200	Opp	153		8-A-062 8-A-093		328170-8X								
489XUAHX-*3 (7)	195	Opp	182		8-A-062 8-A-093		328170-8X								
489XWAHX-*3 (7)	175	Opp	214		8-A-062 8-A-093		328170-8X								
489XXAHX-*3 (7)	140	Opp	254		8-A-062 8-A-093		328170-8X								
680XFAHX-*3 (8)	375	Opp	80		8-A-062 8-A-093		328170-8X								
680XQAHX-*3 (9)	375	Opp	111		8-A-062 8-A-093		328170-8X								
680XSAHX-*3 (10)	325	Opp	153		8-A-062 8-A-093		328170-8X								
823XBAHX-*3 (11)	500	Opp	54		8-A-165		328170-14X								
823XJAHX-*3 (12)	500	Opp	82		8-A-165		328170-14X								
823XMAHX-*3 (13)	500	Opp	96		8-A-165		328170-14X								
823XRAHX-*3 (14)	400	Opp	133		8-A-165		328170-14X								
880XBAHX-*3 (15)	500	Opp	54		8-A-165		328170-14X								
880XDAHX-*3 (16)	500	Opp	64		8-A-165		328170-14X								
880XGAHX-*3 (17)	500	Opp	70		8-A-165		328170-14X								
880XJAHX-*3 (18)	500	Opp	82		8-A-165		328170-14X								
880XMAHX-*3 (19)	500	Opp	96		8-A-165		328170-14X								
880XQAHX-*3 (20)	450	Opp	113		8-A-165		328170-14X								
880XRAHX-*3 (21)	400	Opp	133		8-A-165		328170-14X								
880XTAHX-*3 (22)	350	Opp	171		8-A-165		328170-14X								
ONE SPEED - TWO GEAR - POWERSHIFT (AIR)															
230XAAJX-*3	250	Opp	42		328564X	Furnished		230XAAJX-*3	250	Opp	42		7-A-300		328170-172X
230XBAJX-*3	250	Opp	54		328564X	Furnished		230XBAJX-*3	250	Opp	54		7-A-300		328170-172X
230XDAJX-*3	250	Opp	63		328564X	Furnished		230XDAJX-*3	250	Opp	63		7-A-300		328170-172X
230XKAJX-*3	250	Opp	85		328564X	Furnished		230XKAJX-*3	250	Opp	85		7-A-300		328170-172X
230XQAJX-*3	250	Opp	113		328564X	Furnished		230XQAJX-*3	250	Opp	113		7-A-300		328170-172X
230XUAJX-*3	225	Opp	181		328564X	Furnished		230XUAJX-*3	225	Opp	181		7-A-300		328170-172X

Continued Next Page

CAUTION: Do not use geared adapters with 442 "A" and "C" ratios.

CAUTION: 660/680 Series: Applications above 1500 RPM output shaft speed, contact Chelsea Technical Service for approval.

NOTE: Speeds shown are with transmission in high range. For speeds in low range, multiply speed shown by .84.

NOTE: The AK & XK output flanges can not be used with the "A" & "C" ratios on the 489 Series P.T.O.s due to mounting stud interference. Use a RA or RB rotatable flange for the XK and the RA for the AK flange.

NOTE: If Ordering the 230/231 Series with the Shaft Brake Option, order the "BA" Output for Automatic Transmissions and the "BD" Output for Manual Transmissions.

(7) Input Gear Part No. 5-P-1004
(8) Input Gear Part No. 5-P-1242
(9) Input Gear Part No. 5-P-1246
(10) Input Gear Part No. 5-P-1322
(11) Input Gear Part No. 5-P-285
(12) Input Gear Part No. 5-P-325
(13) Input Gear Part No. 5-P-283
(14) Input Gear Part No. 5-P-721
(15) Input Gear Part No. 5-P-1100
(16) Input Gear Part No. 5-P-1101
(17) Input Gear Part No. 5-P-1135
(18) Input Gear Part No. 5-P-1102
(19) Input Gear Part No. 5-P-1103
(20) Input Gear Part No. 5-P-1385
(21) Input Gear Part No. 5-P-1104
(22) Input Gear Part No. 5-P-1105

January 2008

Parker Hannifin Corporation
Chelsea Products Division
Olive Branch, MS 38654 USA

1214-3A
1214-5A

BOTTOM SIDE ONLY

TRANSMISSION GEAR DATA:
BOT 8-Bolt Opening Gear FORWARD of Centerline
54 Teeth - SPUR
PITCH LINE TO APERTURE FACE:
.5660" (14.3700MM)

RIGHT SIDE ONLY

TRANSMISSION GEAR DATA:
R.H. 6-Bolt Opening Gear FORWARD of Centerline
54 Teeth - SPUR
PITCH LINE TO APERTURE FACE:
.7210" (18.3100MM)

Caution: Application Approval Required for P.T.O. Output Shaft Speeds Above 2500 R.P.M.

BOTTOM Side P.T.O. Model	Inter. Torq.	Dir. Rot.	Engine % Hi	Engine % Rev	Filler Block	Adapter Assy.	Stud Kit	RIGHT Side P.T.O. Model	Inter. Torq.	Dir. Rot.	Engine % Hi	Engine % Rev	Filler Block	Adapter Assy.	Stud Kit
ONE SPEED - TWO GEAR - POWERSHIFT (AIR)															
236XDAHX-*3 (7)	250	Opp	83		7-A-062(P)	310778X	Furnished	236KDAHX-*3 (7)	250	Opp	83		7-A-300		7170-5X
236XKAHX-*3 (7)	250	Opp	106		7-A-062(P)	310778X	Furnished	236KKAHX-*3 (7)	250	Opp	106		7-A-300		7170-5X
236XQAHX-*3 (7)	250	Opp	144		7-A-062(P)	310778X	Furnished	236KQAHX-*3 (7)	250	Opp	144		7-A-300		7170-5X
236XUAHX-*3 (7)	225	Opp	165		7-A-062(P)	310778X	Furnished	236KUAHX-*3 (7)	225	Opp	165		7-A-300		7170-5X
885XBAHX-*3 (15)	500	Opp	54		8-A-165		328170-14X								
885XGAHX-*3 (17)	500	Opp	70		8-A-165		328170-14X								
885XJAHX-*3 (18)	500	Opp	82		8-A-165		328170-14X								
885XMAHX-*3 (19)	500	Opp	96		8-A-165		328170-14X								
ONE SPEED - FORWARD & REVERSE															
340XFAHX-*5 (23)	200	Opp	70	73	7-A-140 (24)	328564X	Furnished	340XFAHX-*5 (23)	200	Opp	70	73	7-A-140 (24) 7-A-270		7170-5X
352XSAHX-*3 (7)	140	Opp	155	200	7-A-062(P)	310778X	Furnished	352XSAHX-*3 (7)	140	Opp	155	200	7-A-300		7170-5X
863XBAHX-*5	500	Opp	54	67	8-A-165		328170-14X								
ONE SPEED - DUAL SHAFT															
452XSAHX-*3 (7)	140	Opp	155		7-A-062(P)	310778X	Furnished	452XSAHX-*3 (7)	140	Opp	155		7-A-300		7170-5X
GEARED ADAPTERS															
628XAHX-3AH					8-A-190		328170-8X	626KAHX-4AH					7-A-300		7170-5X
								630KAHX-3AH					7-A-300		7170-5X
								645KAHX-3AH					7-A-300		7170-5X

CAUTION: Do not use geared adapters with 442 "A" and "C" ratios.

CAUTION: 660/680 Series: Applications above 1500 RPM output shaft speed, contact Chelsea Technical Service for approval.

NOTE: Speeds shown are with transmission in high range. For speeds in low range, multiply speed shown by .84.

NOTE: The AK & XK output flanges can not be used with the "A" & "C" ratios on the 489 Series P.T.O.s due to mounting stud interference. Use a RA or RB rotatable flange for the XK and the RA for the AK flange.

NOTE: If Ordering the 230/231 Series with the Shaft Brake Option, order the "BA" Output for Automatic Transmissions and the "BD" Output for Manual Transmissions.

(7) Input Gear Part No. 5-P-1004
(15) Input Gear Part No. 5-P-1100
(17) Input Gear Part No. 5-P-1135
(18) Input Gear Part No. 5-P-1102
(19) Input Gear Part No. 5-P-1103
(23) Input Gear Part No. 5-P-581

(24) Filler block furnished with P.T.O.

Parker Hannifin Corporation
Chelsea Products Division
Olive Branch, MS 38654 USA

1010-3B
1020-3A
1020-5A
1410-3B

BOTTOM SIDE ONLY

TRANSMISSION GEAR DATA:
BOT 8-Bolt Opening Gear FORWARD of Centerline
48 Teeth - SPUR

PITCH LINE TO APERTURE FACE:
1.0660" (27.0800MM)

RIGHT SIDE ONLY

TRANSMISSION GEAR DATA:
R.H. 6-Bolt Opening Gear FORWARD of Centerline
48 Teeth - SPUR

PITCH LINE TO APERTURE FACE:
1.2210" (31.0100MM)

Caution: Application Approval Required for P.T.O. Output Shaft Speeds Above 2500 R.P.M.

BOTTOM Side P.T.O. Model	Inter. Torq.	Dir. Rot.	Engine % Hi	Engine % Rev	Filler Block	Adapter Assy.	Stud Kit	RIGHT Side P.T.O. Model	Inter. Torq.	Dir. Rot.	Engine % Hi	Engine % Rev	Filler Block	Adapter Assy.	Stud Kit
ONE SPEED - SINGLE GEAR - MECHANICAL SHIFT															
812ZKAHX-*3	400	Eng	83		8-A-165		328170-115X								
ONE SPEED - TWO GEAR - MECHANICAL SHIFT															
221ZCAHX-*3	250	Opp	56		7-A-062(P) 7-A-032 (1)	328481X	Furnished	221ZCAHX-*3	250	Opp	56		7-A-165 7-A-032 (1)		328170-1X
221ZEAHX-*3	250	Opp	64		7-A-032(P)	328481X	Furnished	221ZEAHX-*3	250	Opp	64		7-A-140		328170-1X
221ZLAHX-*3	200	Opp	86		7-A-032(P)	328481X	Furnished	221ZLAHX-*3	200	Opp	86		7-A-140		328170-1X
221ZPAHX-*3	200	Opp	104		7-A-032(P)	328481X	Furnished	221ZPAHX-*3	200	Opp	104		7-A-140		328170-1X
442ZAAHX-*3 (2)	250	Opp	49		7-A-032(P)	328481X	Furnished	442LAAHX-*3 (2)	250	Opp	49		7-A-140		328170-76X
442ZCAHX-*3 (3)	250	Opp	63		7-A-032(P)	328481X	Furnished	442LCAHX-*3 (3)	250	Opp	63		7-A-140		328170-76X
442ZFAHX-*3 (4)	250	Opp	77		7-A-032(P)	328481X	Furnished	442LFAHX-*3 (4)	250	Opp	77		7-A-140		328170-76X
442ZHAHX-*3 (5)	250	Opp	89		7-A-032(P)	328481X	Furnished	442LHAHX-*3 (5)	250	Opp	89		7-A-140		328170-76X
442ZLAHX-*3 (6)	250	Opp	100		7-A-032(P)	328481X	Furnished	442LLAHX-*3 (6)	250	Opp	100		7-A-140		328170-76X
442ZQAHX-*3 (6)	225	Opp	108		7-A-032(P)	328481X	Furnished	442LQAHX-*3 (6)	225	Opp	108		7-A-140		328170-76X
442ZRAHX-*3 (6)	225	Opp	125		7-A-032(P)	328481X	Furnished	442LRAHX-*3 (6)	225	Opp	125		7-A-140		328170-76X
442ZSAHX-*3 (6)	200	Opp	149		7-A-032(P)	328481X	Furnished	442LSAHX-*3 (6)	200	Opp	149		7-A-140		328170-76X
442ZUAHX-*3 (6)	195	Opp	177		7-A-032(P)	328481X	Furnished	442LUAHX-*3 (6)	195	Opp	177		7-A-140		328170-76X
442ZWAHX-*3 (6)	175	Opp	209		7-A-032(P)	328481X	Furnished	442LWAHX-*3 (6)	175	Opp	209		7-A-140		328170-76X
442ZXAHX-*3 (6)	140	Opp	247		7-A-032(P)	328481X	Furnished	442LXAHX-*3 (6)	140	Opp	247		7-A-140		328170-76X
823ZBAHX-*3 (10)	500	Opp	53		8-A-700		328170-133X	660LFAHX-*3 (7)	375	Opp	77		7-A-140		328170-76X
823ZJAHX-*3 (11)	500	Opp	80		8-A-700		328170-133X	660LQAHX-*3 (8)	375	Opp	108		7-A-140		328170-76X
823ZMAHX-*3 (12)	500	Opp	94		8-A-700		328170-133X	660LSAHX-*3 (9)	325	Opp	149		7-A-140		328170-76X
880ZBAHX-*3 (13)	500	Opp	53		8-A-700		328170-133X								
880ZDAHX-*3 (14)	500	Opp	62		8-A-700		328170-133X								
880ZGAHX-*3 (15)	500	Opp	68		8-A-700		328170-133X								
880ZJAHX-*3 (16)	500	Opp	80		8-A-700		328170-133X								
880ZMAHX-*3 (17)	500	Opp	94		8-A-700		328170-133X								
880ZQAHX-*3 (18)	450	Opp	109		8-A-700		328170-133X								
880ZRAHX-*3 (19)	400	Opp	129		8-A-700		328170-133X								
880ZTAHX-*3 (20)	350	Opp	167		8-A-700		328170-133X								

Continued Next Page

CAUTION: Do not use geared adapters with 442 "A" and "C" ratios.

CAUTION: 660/680 Series: Applications above 1500 RPM output shaft speed, contact Chelsea Technical Service for approval.

NOTE: P.T.O. speeds shown are with transmission in low range - for speeds in high range multiply speeds shown by 1.28.

(1) Filler block furnished with P.T.O. but not required
(2) Input Gear Part No. 5-P-1280
(3) Input Gear Part No. 5-P-1287
(4) Input Gear Part No. 5-P-1077
(5) Input Gear Part No. 5-P-1364
(6) Input Gear Part No. 5-P-1004
(7) Input Gear Part No. 5-P-1242
(8) Input Gear Part No. 5-P-1246
(9) Input Gear Part No. 5-P-1322
(10) Input Gear Part No. 5-P-285
(11) Input Gear Part No. 5-P-325
(12) Input Gear Part No. 5-P-283
(13) Input Gear Part No. 5-P-1100
(14) Input Gear Part No. 5-P-1101
(15) Input Gear Part No. 5-P-1135
(16) Input Gear Part No. 5-P-1102
(17) Input Gear Part No. 5-P-1103
(18) Input Gear Part No. 5-P-1385
(19) Input Gear Part No. 5-P-1104
(20) Input Gear Part No. 5-P-1105

Parker Hannifin Corporation
Chelsea Products Division
Olive Branch, MS 38654 USA

1010-3B
1020-3A
1020-5A
1410-3B

BOTTOM SIDE ONLY	RIGHT SIDE ONLY
TRANSMISSION GEAR DATA: BOT 8-Bolt Opening Gear FORWARD of Centerline 48 Teeth - SPUR **PITCH LINE TO APERTURE FACE:** 1.0660" (27.0800MM)	**TRANSMISSION GEAR DATA:** R.H. 6-Bolt Opening Gear FORWARD of Centerline 48 Teeth - SPUR **PITCH LINE TO APERTURE FACE:** 1.2210" (31.0100MM)

Caution: Application Approval Required for P.T.O. Output Shaft Speeds Above 2500 R.P.M.

BOTTOM Side P.T.O. Model	Inter. Torq.	Dir. Rot.	Engine % Hi	Engine % Rev	Filler Block	Adapter Assy.	Stud Kit	RIGHT Side P.T.O. Model	Inter. Torq.	Dir. Rot.	Engine % Hi	Engine % Rev	Filler Block	Adapter Assy.	Stud Kit
ONE SPEED - TWO GEAR - POWERSHIFT (AIR)															
236ZDAHX-*3 (6)	250	Opp	81		7-A-032(P)	328481X	Furnished	236LDAHX-*3 (6)	250	Opp	81		7-A-140		328170-76X
236ZKAHX-*3 (6)	250	Opp	104		7-A-032(P)	328481X	Furnished	236LKAHX-*3 (6)	250	Opp	104		7-A-140		328170-76X
236ZQAHX-*3 (6)	250	Opp	140		7-A-032(P)	328481X	Furnished	236LQAHX-*3 (6)	250	Opp	140		7-A-140		328170-76X
236ZUAHX-*3 (6)	225	Opp	161		7-A-032(P)	328481X	Furnished	236LUAHX-*3 (6)	225	Opp	161		7-A-140		328170-76X
885ZBAHX-*3 (13)	500	Opp	53		8-A-700		328170-133X								
885ZGAHX-*3 (15)	500	Opp	68		8-A-700		328170-133X								
885ZJAHX-*3 (16)	500	Opp	80		8-A-700		328170-133X								
885ZMAHX-*3 (17)	500	Opp	94		8-A-700		328170-133X								
ONE SPEED - FORWARD & REVERSE															
352ZSAHX-*3 (6)	140	Opp	151	195	7-A-032(P)	328481X	Furnished	340SFAHX-*5 (21)	200	Opp	68	71	7-A-062 7-A-140 (1)		328170-94X
								352ZSAHX-*3 (6)	140	Opp	151	195	7-A-140		328170-76X
ONE SPEED - DUAL SHAFT															
452ZSAHX-*3 (6)	140	Opp	151		7-A-032(P)	328481X	Furnished	452ZSAHX-*3 (6)	140	Opp	151		7-A-140		328170-76X

CAUTION: Do not use geared adapters with 442 "A" and "C" ratios.

CAUTION: 660/680 Series: Applications above 1500 RPM output shaft speed, contact Chelsea Technical Service for approval.

NOTE: P.T.O. speeds shown are with transmission in low range - for speeds in high range multiply speeds shown by 1.28.

(1) Filler block furnished with P.T.O. but not required
(6) Input Gear Part No. 5-P-1004
(13) Input Gear Part No. 5-P-1100
(15) Input Gear Part No. 5-P-1135
(16) Input Gear Part No. 5-P-1102
(17) Input Gear Part No. 5-P-1103
(21) Input Gear Part No. 5-P-581

Parker Hannifin Corporation
Chelsea Products Division
Olive Branch, MS 38654 USA

1007-2B	1064-B	1272-A	1362-C
1007-2B	1064-C	1272-B	1362-D
1062-B	1064-D	1274-A	1364-C
1062-C	1207-2B	1274-B	PS130-6B
1062-D	1272-A	1362-B	PS130-6C

BOTTOM SIDE ONLY

TRANSMISSION GEAR DATA:
BOT 8-Bolt Opening Gear FORWARD of Centerline
48 Teeth - SPUR

PITCH LINE TO APERTURE FACE:
1.0650" (27.0500MM)

RIGHT SIDE ONLY

TRANSMISSION GEAR DATA:
R.H. 6-Bolt Opening Gear FORWARD of Centerline
48 Teeth - SPUR

PITCH LINE TO APERTURE FACE:
1.2210" (31.0100MM)

Caution: Application Approval Required for P.T.O. Output Shaft Speeds Above 2500 R.P.M.

BOTTOM Side P.T.O. Model	Inter. Torq.	Dir. Rot.	Engine % Hi	Engine % Rev	Filler Block	Adapter Assy.	Stud Kit	RIGHT Side P.T.O. Model	Inter. Torq.	Dir. Rot.	Engine % Hi	Engine % Rev	Filler Block	Adapter Assy.	Stud Kit
ONE SPEED - SINGLE GEAR - MECHANICAL SHIFT															
812ZKAHX-*5	400	Eng	64		8-A-165		328170-115X								
ONE SPEED - TWO GEAR - MECHANICAL SHIFT															
442ZFAHX-*5 (4)	250	Opp	59		7-A-032(P)(1)	328481X	Furnished	221ZCAHX-*3	250	Opp	43		7-A-165 7-A-032 (1)		328170-1X
442ZLAHX-*5 (6)	250	Opp	77		7-A-032(P)(1)	328481X	Furnished	221ZEAHX-*3	250	Opp	49		7-A-140		328170-1X
442ZQAHX-*5 (6)	225	Opp	83		7-A-032(P)(1)	328481X	Furnished	221ZLAHX-*3	200	Opp	66		7-A-140		328170-1X
442ZSAHX-*5 (6)	200	Opp	115		7-A-032(P)(1)	328481X	Furnished	221ZPAHX-*3	200	Opp	80		7-A-140		328170-1X
442ZUAHX-*5 (6)	195	Opp	136		7-A-032(P)(1)	328481X	Furnished	442ZAAHX-*3 (2)	250	Opp	38		7-A-140		328170-76X
442ZWAHX-*5 (6)	175	Opp	161		7-A-032(P)(1)	328481X	Furnished	442ZCAHX-*3 (3)	250	Opp	48		7-A-140		328170-76X
442ZXAHX-*5 (6)	140	Opp	190		7-A-032(P)(1)	328481X	Furnished	442ZFAHX-*3 (4)	250	Opp	60		7-A-140		328170-76X
823ZBAHX-*3 (10)	500	Opp	41		8-A-700		328170-133X	442ZHAHX-*3 (5)	250	Opp	70		7-A-140		328170-76X
823ZJAHX-*3 (11)	500	Opp	61		8-A-700		328170-133X	442ZLAHX-*3 (6)	250	Opp	77		7-A-140		328170-76X
823ZMAHX-*3 (12)	500	Opp	72		8-A-700		328170-133X	442ZQAHX-*3 (6)	225	Opp	83		7-A-140		328170-76X
880ZBAHX-*3 (13)	500	Opp	41		8-A-700		328170-133X	442ZRAHX-*3 (6)	225	Opp	96		7-A-140		328170-76X
880ZDAHX-*3 (14)	500	Opp	48		8-A-700		328170-133X	442ZSAHX-*3 (6)	200	Opp	114		7-A-140		328170-76X
880ZGAHX-*3 (15)	500	Opp	52		8-A-700		328170-133X	442ZUAHX-*3 (6)	195	Opp	136		7-A-140		328170-76X
880ZJAHX-*3 (16)	500	Opp	61		8-A-700		328170-133X	442ZWAHX-*3 (6)	175	Opp	161		7-A-140		328170-76X
880ZMAHX-*3 (17)	500	Opp	72		8-A-700		328170-133X	442ZXAHX-*3 (6)	140	Opp	190		7-A-140		328170-76X
880ZQAHX-*3 (18)	450	Opp	85		8-A-700		328170-133X	660ZFAHX-*3 (7)	375	Opp	60		7-A-140		328170-76X
880ZRAHX-*3 (19)	400	Opp	100		8-A-700		328170-133X	660ZQAHX-*3 (8)	375	Opp	83		7-A-140		328170-76X
880ZTAHX-*3 (20)	350	Opp	128		8-A-700		328170-133X	660ZSAHX-*3 (9)	325	Opp	114		7-A-140		328170-76X
ONE SPEED - TWO GEAR - POWERSHIFT (AIR)															
885ZBAHX-*3 (13)	500	Opp	41		8-A-700		328170-133X	236ZDAHX-*3 (6)	250	Opp	62		7-A-140		328170-76X
885ZGAHX-*3 (15)	500	Opp	52		8-A-700		328170-133X	236ZKAHX-*3 (6)	250	Opp	80		7-A-140		328170-76X
885ZJAHX-*3 (16)	500	Opp	61		8-A-700		328170-133X	236ZQAHX-*3 (6)	250	Opp	108		7-A-140		328170-76X
885ZMAHX-*3 (17)	500	Opp	72		8-A-700		328170-133X	236ZUAHX-*3 (6)	225	Opp	124		7-A-140		328170-76X
ONE SPEED - FORWARD & REVERSE															
								340SFAHX-*5 (21)	200	Opp	52	55	7-A-062 7-A-140 (22)		328170-94X
								352ZSAHX-*3 (6)	140	Opp	116	150	7-A-140		328170-76X

Continued Next Page

CAUTION: Do not use geared adapters with 442 "A" and "C" ratios.

CAUTION: 660/680 Series: Applications above 1500 RPM output shaft speed, contact Chelsea Technical Service for approval.

NOTE: For transmission models 1007-2B, 1062B, 1064B, and 1064D, multiply speeds shown by 1.04.

(1) Filler block furnished with P.T.O. but not required
(2) Input Gear Part No. 5-P-1280
(3) Input Gear Part No. 5-P-1287
(4) Input Gear Part No. 5-P-1077
(5) Input Gear Part No. 5-P-1364
(6) Input Gear Part No. 5-P-1004
(7) Input Gear Part No. 5-P-1242
(8) Input Gear Part No. 5-P-1246
(9) Input Gear Part No. 5-P-1322
(10) Input Gear Part No. 5-P-285
(11) Input Gear Part No. 5-P-325
(12) Input Gear Part No. 5-P-283
(13) Input Gear Part No. 5-P-1100
(14) Input Gear Part No. 5-P-1101
(15) Input Gear Part No. 5-P-1135
(16) Input Gear Part No. 5-P-1102
(17) Input Gear Part No. 5-P-1103
(18) Input Gear Part No. 5-P-1385
(19) Input Gear Part No. 5-P-1104
(20) Input Gear Part No. 5-P-1105
(21) Input Gear Part No. 5-P-581
(22) Filler block furnished with P.T.O.

1007-2B	1064-B	1272-A	1362-C
1007-2B	1064-C	1272-B	1362-D
1062-B	1064-D	1274-A	1364-C
1062-C	1207-2B	1274-B	PS130-6B
1062-D	1272-A	1362-B	PS130-6C

RIGHT SIDE ONLY

TRANSMISSION GEAR DATA:
R.H. 6-Bolt Opening Gear FORWARD of Centerline

51 Teeth - SPUR

PITCH LINE TO APERTURE FACE:
.9710" (24.6600MM)

Caution: Application Approval Required for P.T.O. Output Shaft Speeds Above 2500 R.P.M.

BOTTOM Side P.T.O. Model	Inter. Torq.	Dir. Rot.	Engine % Hi	Engine % Rev	Filler Block	Adapter Assy.	Stud Kit	RIGHT Side P.T.O. Model	Inter. Torq.	Dir. Rot.	Engine % Hi	Engine % Rev	Filler Block	Adapter Assy.	Stud Kit
ONE SPEED - DUAL SHAFT															
								452ZSAHX-*3 (6)	140	Opp	116		7-A-140		328170-76X

CAUTION: Do not use geared adapters with 442 "A" and "C" ratios.

CAUTION: 660/680 Series: Applications above 1500 RPM output shaft speed, contact Chelsea Technical Service for approval.

NOTE: For transmission models 1007-2B, 1062B, 1064B, and 1064D, multiply speeds shown by 1.04.

(6) Input Gear Part No. 5-P-1004

Parker Hannifin Corporation
Chelsea Products Division
Olive Branch, MS 38654 USA

1253-A
1255-A
1453-A

BOTTOM SIDE ONLY

TRANSMISSION GEAR DATA:
BOT 8-Bolt Opening Gear FORWARD of Centerline
51 Teeth - SPUR

PITCH LINE TO APERTURE FACE:
.8160" (20.7300MM)

RIGHT SIDE ONLY

TRANSMISSION GEAR DATA:
R.H. 6-Bolt Opening Gear FORWARD of Centerline
51 Teeth - SPUR

PITCH LINE TO APERTURE FACE:
.9710" (24.6600MM)

Caution: Application Approval Required for P.T.O. Output Shaft Speeds Above 2500 R.P.M.

BOTTOM Side P.T.O. Model	Inter. Torq.	Dir. Rot.	Engine % Hi	Engine % Rev	Filler Block	Adapter Assy.	Stud Kit	RIGHT Side P.T.O. Model	Inter. Torq.	Dir. Rot.	Engine % Hi	Engine % Rev	Filler Block	Adapter Assy.	Stud Kit
ONE SPEED - SINGLE GEAR - MECHANICAL SHIFT															
100XRAHX-*3 (1)	125	Eng	144			328481X	Furnished	100XRAHX-*3 (1)	125	Eng	144		7-A-093		Furnished
812XKAHX-*3	400	Eng	96				Furnished								
ONE SPEED - TWO GEAR - MECHANICAL SHIFT															
221ZCAHX-*3	250	Opp	64		7-A-032 (2)	328564X	Furnished	221XCAHX-*3	250	Opp	64		7-A-125 7-A-032 (2)		328170-102X
221ZEAHX-*3	250	Opp	74			328564X	Furnished	221XEAHX-*3	250	Opp	74		7-A-093		Furnished
221ZLAHX-*3	200	Opp	100			328564X	Furnished	221XLAHX-*3	200	Opp	100		7-A-093		328170-102X
221ZPAHX-*3	200	Opp	121			328564X	Furnished	221XPAHX-*3	200	Opp	121		7-A-093		328170-102X
442ZAAHX-*3 (3)	250	Opp	57			328564X	Furnished	442KAAHX-*3 (3)	250	Opp	57		7-A-093		7170-3X
442ZCAHX-*3 (4)	250	Opp	72			328564X	Furnished	442KCAHX-*3 (4)	250	Opp	72		7-A-093		7170-3X
442ZFAHX-*3 (5)	250	Opp	89			328564X	Furnished	442KFAHX-*3 (5)	250	Opp	89		7-A-093		7170-3X
442ZHAHX-*3 (6)	250	Opp	103			328564X	Furnished	442KHAHX-*3 (6)	250	Opp	103		7-A-093		7170-3X
442ZLAHX-*3 (7)	250	Opp	116			328564X	Furnished	442KLAHX-*3 (7)	250	Opp	116		7-A-093		7170-3X
442ZQAHX-*3 (7)	225	Opp	125			328564X	Furnished	442KQAHX-*3 (7)	225	Opp	125		7-A-093		7170-3X
442ZRAHX-*3 (7)	225	Opp	144			328564X	Furnished	442KRAHX-*3 (7)	225	Opp	144		7-A-093		7170-3X
442ZSAHX-*3 (7)	200	Opp	172			328564X	Furnished	442KSAHX-*3 (7)	200	Opp	172		7-A-093		7170-3X
442ZUAHX-*3 (7)	195	Opp	205			328564X	Furnished	442KUAHX-*3 (7)	195	Opp	205		7-A-093		7170-3X
442ZWAHX-*3 (7)	175	Opp	241			328564X	Furnished	442KWAHX-*3 (7)	175	Opp	241		7-A-093		7170-3X
442ZXAHX-*3 (7)	140	Opp	285			328564X	Furnished	442KXAHX-*3 (7)	140	Opp	285		7-A-093		7170-3X
489XAAHX-*3 (3)	250	Opp	57				Furnished	660KFAHX-*3 (8)	375	Opp	89		7-A-093		7170-3X
489XCAHX-*3 (4)	250	Opp	72				Furnished	660KQAHX-*3 (9)	375	Opp	125		7-A-093		7170-3X
489XFAHX-*3 (5)	250	Opp	89				Furnished	660KSAHX-*3 (10)	325	Opp	172		7-A-093		7170-3X
489XHAHX-*3 (6)	250	Opp	103				Furnished								
489XLAHX-*3 (7)	250	Opp	116				Furnished								
489XQAHX-*3 (7)	225	Opp	125				Furnished								
489XRAHX-*3 (7)	225	Opp	144				Furnished								
489XSAHX-*3 (7)	200	Opp	172				Furnished								
489XUAHX-*3 (7)	195	Opp	205				Furnished								
489XWAHX-*3 (7)	175	Opp	241				Furnished								
489XXAHX-*3 (7)	140	Opp	285				Furnished								
680XFAHX-*3 (8)	375	Opp	89				Furnished								
680XQAHX-*3 (9)	375	Opp	125				Furnished								

Continued Next Page

CAUTION: 660/680 Series: Applications above 1500 RPM output shaft speed, contact Chelsea Technical Service for approval.

NOTE: The AK & XK output flanges can not be used with the "A" & "C" ratios on the 489 Series P.T.O.s due to mounting stud interference. Use a RA or RB rotatable flange for the XK and the RA for the AK flange.

NOTE: If Ordering the 230/231 Series with the Shaft Brake Option, order the "BA" Output for Automatic Transmissions and the "BD" Output for Manual Transmissions.

(1) Gear and Shaft Kit No. KXA-2-P-565
(2) Filler block furnished with P.T.O. but not required
(3) Input Gear Part No. 5-P-1280
(4) Input Gear Part No. 5-P-1287
(5) Input Gear Part No. 5-P-1077
(6) Input Gear Part No. 5-P-1364
(7) Input Gear Part No. 5-P-1004
(8) Input Gear Part No. 5-P-1242
(9) Input Gear Part No. 5-P-1246
(10) Input Gear Part No. 5-P-1322

1253-A
1255-A
1453-A

BOTTOM SIDE ONLY	RIGHT SIDE ONLY
TRANSMISSION GEAR DATA: BOT 8-Bolt Opening Gear FORWARD of Centerline 51 Teeth - SPUR **PITCH LINE TO APERTURE FACE:** .8160" (20.7300MM)	**TRANSMISSION GEAR DATA:** R.H. 6-Bolt Opening Gear FORWARD of Centerline 51 Teeth - SPUR **PITCH LINE TO APERTURE FACE:** .9710" (24.6600MM)

Caution: Application Approval Required for P.T.O. Output Shaft Speeds Above 2500 R.P.M.

BOTTOM Side P.T.O. Model	Inter. Torq.	Dir. Rot.	Engine % Hi	Engine % Rev	Filler Block	Adapter Assy.	Stud Kit	RIGHT Side P.T.O. Model	Inter. Torq.	Dir. Rot.	Engine % Hi	Engine % Rev	Filler Block	Adapter Assy.	Stud Kit
ONE SPEED - TWO GEAR - MECHANICAL SHIFT															
680XSAHX-*3 (10)	325	Opp	172				Furnished								
823XBAHX-*3 (11)	500	Opp	61				Furnished								
823XJAHX-*3 (12)	500	Opp	92				Furnished								
823XMAHX-*3 (13)	500	Opp	108				Furnished								
823XRAHX-*3 (14)	400	Opp	150				Furnished								
823XTKTX-*3 (15)	350	Opp	182		8-A-165 (16)		Furnished								
880XBAHX-*3 (17)	500	Opp	61				Furnished								
880XDAHX-*3 (18)	500	Opp	72				Furnished								
880XGAHX-*3 (19)	500	Opp	78				Furnished								
880XJAHX-*3 (20)	500	Opp	92				Furnished								
880XMAHX-*3 (21)	500	Opp	108				Furnished								
880XQAHX-*3 (22)	450	Opp	127				Furnished								
880XRAHX-*3 (23)	400	Opp	150				Furnished								
880XTAHX-*3 (24)	350	Opp	193				Furnished								
ONE SPEED - TWO GEAR - POWERSHIFT (AIR)															
230XAAJX-*3	250	Opp	47			328481X	Furnished	230XAAJX-*3	250	Opp	47		7-A-125		328170-173X
230XBAJX-*3	250	Opp	61			328481X	Furnished	230XBAJX-*3	250	Opp	61		7-A-125		328170-173X
230XDAJX-*3	250	Opp	71			328481X	Furnished	230XDAJX-*3	250	Opp	71		7-A-125		328170-173X
230XKAJX-*3	250	Opp	96			328481X	Furnished	230XKAJX-*3	250	Opp	96		7-A-125		328170-173X
230XQAJX-*3	250	Opp	127			328481X	Furnished	230XQAJX-*3	250	Opp	127		7-A-125		328170-173X
230XUAJX-*3	225	Opp	204			328481X	Furnished	230XUAJX-*3	225	Opp	204		7-A-125		328170-173X
236ZDAHX-*3 (7)	250	Opp	94			328564X	Furnished	236KDAHX-*3 (7)	250	Opp	94		7-A-093		7170-3X
236ZKAHX-*3 (7)	250	Opp	120			328564X	Furnished	236KKAHX-*3 (7)	250	Opp	120		7-A-093		7170-3X
236ZQAHX-*3 (7)	250	Opp	162			328564X	Furnished	236KQAHX-*3 (7)	250	Opp	162		7-A-093		7170-3X
236ZUAHX-*3 (7)	225	Opp	185			328564X	Furnished	236KUAHX-*3 (7)	225	Opp	185		7-A-093		7170-3X
885XBAHX-*3 (17)	500	Opp	61				Furnished								
885XGAHX-*3 (19)	500	Opp	78				Furnished								
885XJAHX-*3 (20)	500	Opp	92				Furnished								
885XMAHX-*3 (21)	500	Opp	108				Furnished								

Continued Next Page

CAUTION: 660/680 Series: Applications above 1500 RPM output shaft speed, contact Chelsea Technical Service for approval.

NOTE: The AK & XK output flanges can not be used with the "A" & "C" ratios on the 489 Series P.T.O.s due to mounting stud interference. Use a RA or RB rotatable flange for the XK and the RA for the AK flange.

NOTE: If Ordering the 230/231 Series with the Shaft Brake Option, order the "BA" Output for Automatic Transmissions and the "BD" Output for Manual Transmissions.

(7) Input Gear Part No. 5-P-1004
(10) Input Gear Part No. 5-P-1322
(11) Input Gear Part No. 5-P-285
(12) Input Gear Part No. 5-P-325
(13) Input Gear Part No. 5-P-283
(14) Input Gear Part No. 5-P-721
(15) Input Gear Part No. 5-P-1395
(16) Filler block furnished with P.T.O.
(17) Input Gear Part No. 5-P-1100
(18) Input Gear Part No. 5-P-1101
(19) Input Gear Part No. 5-P-1135
(20) Input Gear Part No. 5-P-1102
(21) Input Gear Part No. 5-P-1103
(22) Input Gear Part No. 5-P-1385
(23) Input Gear Part No. 5-P-1104
(24) Input Gear Part No. 5-P-1105

Parker Hannifin Corporation
Chelsea Products Division
Olive Branch, MS 38654 USA

1253-A
1255-A
1453-A

BOTTOM SIDE ONLY

TRANSMISSION GEAR DATA:
BOT 8-Bolt Opening Gear FORWARD of Centerline
51 Teeth - SPUR

PITCH LINE TO APERTURE FACE:
.8160" (20.7300MM)

RIGHT SIDE ONLY

TRANSMISSION GEAR DATA:
R.H. 6-Bolt Opening Gear FORWARD of Centerline
51 Teeth - SPUR

PITCH LINE TO APERTURE FACE:
.9710" (24.6600MM)

Caution: Application Approval Required for P.T.O. Output Shaft Speeds Above 2500 R.P.M.

BOTTOM Side P.T.O. Model	Inter. Torq.	Dir. Rot.	Engine % Hi	Engine % Rev	Filler Block	Adapter Assy.	Stud Kit	RIGHT Side P.T.O. Model	Inter. Torq.	Dir. Rot.	Engine % Hi	Engine % Rev	Filler Block	Adapter Assy.	Stud Kit
ONE SPEED - FORWARD & REVERSE															
340SFAHX-*5 (25)	200	Opp	78	82	7-A-140 (16)	310778X	Furnished	340XFAHX-*5 (25)	200	Opp	78	82	7-A-140 (16) 7-A-093		Furnished
352ZSAHX-*3 (7)	140	Opp	174	225		328564X	Furnished	352XSAHX-*3 (7)	140	Opp	174	225	7-A-093		7170-3X
863XBAHX-*5	500	Opp	61	75			Furnished								
ONE SPEED - DUAL SHAFT															
452ZSAHX-*3 (7)	140	Opp	174			328564X	Furnished	452XSAHX-*3 (7)	140	Opp	174		7-A-093		7170-3X
GEARED ADAPTERS															
628XAHX-3AH					8-A-032		Furnished	626KAHX-3AH					7-A-093		7170-3X
								630KAHX-3AH					7-A-093		7170-3X
								645KAHX-3AH					7-A-093		7170-3X

CAUTION: 660/680 Series: Applications above 1500 RPM output shaft speed, contact Chelsea Technical Service for approval.

NOTE: The AK & XK output flanges can not be used with the "A" & "C" ratios on the 489 Series P.T.O.s due to mounting stud interference. Use a RA or RB rotatable flange for the XK and the RA for the AK flange.

NOTE: If Ordering the 230/231 Series with the Shaft Brake Option, order the "BA" Output for Automatic Transmissions and the "BD" Output for Manual Transmissions.

(7) Input Gear Part No. 5-P-1004
(16) Filler block furnished with P.T.O.
(25) Input Gear Part No. 5-P-581

1010-2A
1010-4A
1020-2A
1020-4A
1410-2A

BOTTOM SIDE ONLY

TRANSMISSION GEAR DATA:
BOT 8-Bolt Opening Gear FORWARD of Centerline
49 Teeth - SPUR

PITCH LINE TO APERTURE FACE:
.9830" (24.9700MM)

RIGHT SIDE ONLY

TRANSMISSION GEAR DATA:
R.H. 6-Bolt Opening Gear FORWARD of Centerline
49 Teeth - SPUR

PITCH LINE TO APERTURE FACE:
1.1380" (29.9100MM)

Caution: Application Approval Required for P.T.O. Output Shaft Speeds Above 2500 R.P.M.

BOTTOM Side P.T.O. Model	Inter. Torq.	Dir. Rot.	Engine % Hi	Engine % Rev	Filler Block	Adapter Assy.	Stud Kit	RIGHT Side P.T.O. Model	Inter. Torq.	Dir. Rot.	Engine % Hi	Engine % Rev	Filler Block	Adapter Assy.	Stud Kit
ONE SPEED - SINGLE GEAR - MECHANICAL SHIFT															
812ZKAHX-*5	400	Eng	65		8-A-165		328170-115X								
ONE SPEED - TWO GEAR - MECHANICAL SHIFT															
221ZCAHX-*3	250	Opp	44		7-A-062(P) 7-A-032 (1)	328481X	Furnished	221ZCAHX-*3	250	Opp	44		7-A-165 7-A-032 (1)		328170-1X
221ZEAHX-*3	250	Opp	51		7-A-032(P)	328481X	Furnished	221ZEAHX-*3	250	Opp	51		7-A-140		328170-1X
221ZLAHX-*3	200	Opp	68		7-A-032(P)	328481X	Furnished	221ZLAHX-*3	200	Opp	68		7-A-140		328170-1X
221ZPAHX-*3	200	Opp	82		7-A-032(P)	328481X	Furnished	221ZPAHX-*3	200	Opp	82		7-A-140		328170-1X
442ZAAHX-*3 (2)	250	Opp	38		7-A-032(P)	328481X	Furnished	442LAAHX-*3 (2)	250	Opp	38		7-A-140		328170-76X
442ZCAHX-*3 (3)	250	Opp	49		7-A-032(P)	328481X	Furnished	442LCAHX-*3 (3)	250	Opp	49		7-A-140		328170-76X
442ZFAHX-*3 (4)	250	Opp	61		7-A-032(P)	328481X	Furnished	442LFAHX-*3 (4)	250	Opp	61		7-A-140		328170-76X
442ZHAHX-*3 (5)	250	Opp	71		7-A-032(P)	328481X	Furnished	442LHAHX-*3 (5)	250	Opp	71		7-A-140		328170-76X
442ZLAHX-*3 (6)	250	Opp	79		7-A-032(P)	328481X	Furnished	442LLAHX-*3 (6)	250	Opp	79		7-A-140		328170-76X
442ZQAHX-*3 (6)	225	Opp	85		7-A-032(P)	328481X	Furnished	442LQAHX-*3 (6)	225	Opp	85		7-A-140		328170-76X
442ZRAHX-*3 (6)	225	Opp	98		7-A-032(P)	328481X	Furnished	442LRAHX-*3 (6)	225	Opp	98		7-A-140		328170-76X
442ZSAHX-*3 (6)	200	Opp	117		7-A-032(P)	328481X	Furnished	442LSAHX-*3 (6)	200	Opp	117		7-A-140		328170-76X
442ZUAHX-*3 (6)	195	Opp	139		7-A-032(P)	328481X	Furnished	442LUAHX-*3 (6)	195	Opp	139		7-A-140		328170-76X
442ZWAHX-*3 (6)	175	Opp	164		7-A-032(P)	328481X	Furnished	442LWAHX-*3 (6)	175	Opp	164		7-A-140		328170-76X
442ZXAHX-*3 (6)	140	Opp	194		7-A-032(P)	328481X	Furnished	442LXAHX-*3 (6)	140	Opp	194		7-A-140		328170-76X
823ZBAHX-*3 (10)	500	Opp	41		8-A-700		328170-133X	660LFAHX-*3 (7)	375	Opp	61		7-A-140		328170-76X
823ZJAHX-*3 (11)	500	Opp	63		8-A-700		328170-133X	660LQAHX-*3 (8)	375	Opp	85		7-A-140		328170-76X
823ZMAHX-*3 (12)	500	Opp	74		8-A-700		328170-133X	660LSAHX-*3 (9)	325	Opp	117		7-A-140		328170-76X
880ZBAHX-*3 (13)	500	Opp	41		8-A-700		328170-133X								
880ZDAHX-*3 (14)	500	Opp	49		8-A-700		328170-133X								
880ZGAHX-*3 (15)	500	Opp	53		8-A-700		328170-133X								
880ZJAHX-*3 (16)	500	Opp	63		8-A-700		328170-133X								
880ZMAHX-*3 (17)	500	Opp	74		8-A-700		328170-133X								
880ZQAHX-*3 (18)	450	Opp	87		8-A-700		328170-133X								
880ZRAHX-*3 (19)	400	Opp	102		8-A-700		328170-133X								
880ZTAHX-*3 (20)	350	Opp	131		8-A-700		328170-133X								
ONE SPEED - TWO GEAR - POWERSHIFT (AIR)															
236ZDAHX-*3 (6)	250	Opp	64		7-A-032(P)	328481X	Furnished	236LDAHX-*3 (6)	250	Opp	64		7-A-140		328170-76X
236ZKAHX-*3 (6)	250	Opp	81		7-A-032(P)	328481X	Furnished	236LKAHX-*3 (6)	250	Opp	81		7-A-140		328170-76X
236ZQAHX-*3 (6)	250	Opp	110		7-A-032(P)	328481X	Furnished	236LQAHX-*3 (6)	250	Opp	110		7-A-140		328170-76X
236ZUAHX-*3 (6)	225	Opp	126		7-A-032(P)	328481X	Furnished	236LUAHX-*3 (6)	225	Opp	126		7-A-140		328170-76X

Continued Next Page

CAUTION: Do not use geared adapters with 442 "A" and "C" ratios.

CAUTION: 660/680 Series: Applications above 1500 RPM output shaft speed, contact Chelsea Technical Service for approval.

NOTE: Speeds shown are with Transmission in Low Range - For High Range multiply speed shown by 1.27.

(1) Filler block furnished with P.T.O. but not required
(2) Input Gear Part No. 5-P-1280
(3) Input Gear Part No. 5-P-1287
(4) Input Gear Part No. 5-P-1077
(5) Input Gear Part No. 5-P-1364
(6) Input Gear Part No. 5-P-1004
(7) Input Gear Part No. 5-P-1242
(8) Input Gear Part No. 5-P-1246
(9) Input Gear Part No. 5-P-1322
(10) Input Gear Part No. 5-P-285
(11) Input Gear Part No. 5-P-325
(12) Input Gear Part No. 5-P-283
(13) Input Gear Part No. 5-P-1100
(14) Input Gear Part No. 5-P-1101
(15) Input Gear Part No. 5-P-1135
(16) Input Gear Part No. 5-P-1102
(17) Input Gear Part No. 5-P-1103
(18) Input Gear Part No. 5-P-1385
(19) Input Gear Part No. 5-P-1104
(20) Input Gear Part No. 5-P-1105

1010-2A
1010-4A
1020-2A
1020-4A
1410-2A

BOTTOM SIDE ONLY

TRANSMISSION GEAR DATA:
BOT 8-Bolt Opening Gear FORWARD of Centerline
49 Teeth - SPUR

PITCH LINE TO APERTURE FACE:
.9830" (24.9700MM)

RIGHT SIDE ONLY

TRANSMISSION GEAR DATA:
R.H. 6-Bolt Opening Gear FORWARD of Centerline
49 Teeth - SPUR

PITCH LINE TO APERTURE FACE:
1.1380" (29.9100MM)

Caution: Application Approval Required for P.T.O. Output Shaft Speeds Above 2500 R.P.M.

BOTTOM Side P.T.O. Model	Inter. Torq.	Dir. Rot.	Engine % Hi	Engine % Rev	Filler Block	Adapter Assy.	Stud Kit	RIGHT Side P.T.O. Model	Inter. Torq.	Dir. Rot.	Engine % Hi	Engine % Rev	Filler Block	Adapter Assy.	Stud Kit
ONE SPEED - TWO GEAR - POWERSHIFT (AIR)															
885ZBAHX-*3 (13)	500	Opp	41		8-A-700		328170-133X								
885ZGAHX-*3 (15)	500	Opp	53		8-A-700		328170-133X								
885ZJAHX-*3 (16)	500	Opp	63		8-A-700		328170-133X								
885ZMAHX-*3 (17)	500	Opp	74		8-A-700		328170-133X								
ONE SPEED - FORWARD & REVERSE															
352ZSAHX-*3 (6)	140	Opp	118	153	7-A-032(P)	328481X	Furnished	340XFAHX-*5 (21)	200	Opp	53	56	7-A-140 (22) 7-A-062		328170-94X
								352ZSAHX-*3 (6)	140	Opp	118	153	7-A-140		328170-76X
ONE SPEED - DUAL SHAFT															
452ZSAHX-*3 (6)	140	Opp	118		7-A-032(P)	328481X	Furnished	452ZSAHX-*3 (6)	140	Opp	118		7-A-140		328170-76X

CAUTION: Do not use geared adapters with 442 "A" and "C" ratios.

CAUTION: 660/680 Series: Applications above 1500 RPM output shaft speed, contact Chelsea Technical Service for approval.

NOTE: Speeds shown are with Transmission in Low Range - For High Range multiply speed shown by 1.27.

(6) Input Gear Part No. 5-P-1004
(13) Input Gear Part No. 5-P-1100
(15) Input Gear Part No. 5-P-1135
(16) Input Gear Part No. 5-P-1102
(17) Input Gear Part No. 5-P-1103
(21) Input Gear Part No. 5-P-581

(22) Filler block furnished with P.T.O.

1253-B
1255-B
1453-B

BOTTOM SIDE ONLY

TRANSMISSION GEAR DATA:
BOT 8-Bolt Opening Gear FORWARD of Centerline
55 Teeth - SPUR
PITCH LINE TO APERTURE FACE:
.4830" (12.2700MM)

RIGHT SIDE ONLY

TRANSMISSION GEAR DATA:
R.H. 6-Bolt Opening Gear FORWARD of Centerline
55 Teeth - SPUR
PITCH LINE TO APERTURE FACE:
.6380" (16.2100MM)

Caution: Application Approval Required for P.T.O. Output Shaft Speeds Above 2500 R.P.M.

BOTTOM Side P.T.O. Model	Inter. Torq.	Dir. Rot.	Engine % Hi	Engine % Rev	Filler Block	Adapter Assy.	Stud Kit	RIGHT Side P.T.O. Model	Inter. Torq.	Dir. Rot.	Engine % Hi	Engine % Rev	Filler Block	Adapter Assy.	Stud Kit
ONE SPEED - SINGLE GEAR - MECHANICAL SHIFT															
100XRAHX-*3 (1)	125	Eng	156			328564X	Furnished	100XRAHX-*3 (1)	125	Eng	156		7-A-350		328291-3X
812XKAHX-*3	400	Eng	104		8-A-190		328170-117X								
ONE SPEED - TWO GEAR - MECHANICAL SHIFT															
221XCAHX-*3	250	Opp	69		7-A-032 (2)	328564X	Furnished	221XCAHX-*3	250	Opp	69		7-A-350 7-A-032 (2)		328170-35X
221XEAHX-*3	250	Opp	80			328564X	Furnished	221XEAHX-*3	250	Opp	80		7-A-350		328170-35X
221XLAHX-*3	200	Opp	108			328564X	Furnished	221XLAHX-*3	200	Opp	108		7-A-350		328170-35X
221XPAHX-*3	200	Opp	130			328564X	Furnished	221XPAHX-*3	200	Opp	130		7-A-350		328170-35X
442XAAHX-*3 (3)	250	Opp	61			328564X	Furnished	442KAAHX-*3 (3)	250	Opp	61		7-A-350		7170-5X
442XCAHX-*3 (4)	250	Opp	78			328564X	Furnished	442KCAHX-*3 (4)	250	Opp	78		7-A-350		7170-5X
442XFAHX-*3 (5)	250	Opp	96			328564X	Furnished	442KFAHX-*3 (5)	250	Opp	96		7-A-350		7170-5X
442XHAHX-*3 (6)	250	Opp	111			328564X	Furnished	442KHAHX-*3 (6)	250	Opp	111		7-A-350		7170-5X
442XLAHX-*3 (7)	250	Opp	125			328564X	Furnished	442KLAHX-*3 (7)	250	Opp	125		7-A-350		7170-5X
442XQAHX-*3 (7)	225	Opp	135			328564X	Furnished	442KQAHX-*3 (7)	225	Opp	135		7-A-350		7170-5X
442XRAHX-*3 (7)	225	Opp	156			328564X	Furnished	442KRAHX-*3 (7)	225	Opp	156		7-A-350		7170-5X
442XSAHX-*3 (7)	200	Opp	185			328564X	Furnished	442KSAHX-*3 (7)	200	Opp	185		7-A-350		7170-5X
442XUAHX-*3 (7)	195	Opp	221			328564X	Furnished	442KUAHX-*3 (7)	195	Opp	221		7-A-350		7170-5X
442XWAHX-*3 (7)	175	Opp	260			328564X	Furnished	442KWAHX-*3 (7)	175	Opp	260		7-A-350		7170-5X
442XXAHX-*3 (7)	140	Opp	308			328564X	Furnished	442KXAHX-*3 (7)	140	Opp	308		7-A-350		7170-5X
489XAAHX-*3 (3)	250	Opp	61		8-A-163		328170-190X	660KFAHX-*3 (8)	375	Opp	96		7-A-350		7170-5X
489XCAHX-*3 (4)	250	Opp	78		8-A-032 8-A-165 8-A-032		328170-190X	660KQAHX-*3 (9)	375	Opp	135		7-A-350		7170-5X
489XFAHX-*3 (5)	250	Opp	96		8-A-165 8-A-032		328170-190X	660KSAHX-*3 (10)	325	Opp	185		7-A-350		7170-5X
489XHAHX-*3 (6)	250	Opp	111		8-A-165 8-A-032		328170-190X								
489XLAHX-*3 (7)	250	Opp	125		8-A-165 8-A-032		328170-190X								
489XQAHX-*3 (7)	225	Opp	135		8-A-165 8-A-032		328170-190X								
489XRAHX-*3 (7)	225	Opp	156		8-A-165 8-A-032		328170-190X								

Continued Next Page

CAUTION: 660/680 Series: Applications above 1500 RPM output shaft speed, contact Chelsea Technical Service for approval.

NOTE: The AK & XK output flanges can not be used with the "A" & "C" ratios on the 489 Series P.T.O.s due to mounting stud interference. Use a RA or RB rotatable flange for the XK and the RA for the AK flange.

NOTE: If Ordering the 230/231 Series with the Shaft Brake Option, order the "BA" Output for Automatic Transmissions and the "BD" Output for Manual Transmissions.

(1) Gear and Shaft Kit No. KXA-2-P-565
(2) Filler block furnished with P.T.O. but not required
(3) Input Gear Part No. 5-P-1280
(4) Input Gear Part No. 5-P-1287
(5) Input Gear Part No. 5-P-1077
(6) Input Gear Part No. 5-P-1364
(7) Input Gear Part No. 5-P-1004
(8) Input Gear Part No. 5-P-1242
(9) Input Gear Part No. 5-P-1246
(10) Input Gear Part No. 5-P-1322

Parker Hannifin Corporation
Chelsea Products Division
Olive Branch, MS 38654 USA

1253-B
1255-B
1453-B

BOTTOM SIDE ONLY

TRANSMISSION GEAR DATA:
BOT 8-Bolt Opening Gear FORWARD of Centerline
55 Teeth - SPUR

PITCH LINE TO APERTURE FACE:
.4830" (12.2700MM)

RIGHT SIDE ONLY

TRANSMISSION GEAR DATA:
R.H. 6-Bolt Opening Gear FORWARD of Centerline
55 Teeth - SPUR

PITCH LINE TO APERTURE FACE:
.6380" (16.2100MM)

Caution: Application Approval Required for P.T.O. Output Shaft Speeds Above 2500 R.P.M.

BOTTOM Side P.T.O. Model	Inter. Torq.	Dir. Rot.	Engine % Hi	Engine % Rev	Filler Block	Adapter Assy.	Stud Kit	RIGHT Side P.T.O. Model	Inter. Torq.	Dir. Rot.	Engine % Hi	Engine % Rev	Filler Block	Adapter Assy.	Stud Kit
ONE SPEED - TWO GEAR - MECHANICAL SHIFT															
489XSAHX-*3 (7)	200	Opp	185		8-A-165 8-A-032		328170-190X								
489XUAHX-*3 (7)	195	Opp	221		8-A-165 8-A-032		328170-190X								
489XWAHX-*3 (7)	175	Opp	260		8-A-165 8-A-032		328170-190X								
489XXAHX-*3 (7)	140	Opp	308		8-A-165 8-A-032		328170-190X								
680XFAHX-*3 (8)	375	Opp	96		8-A-165 8-A-032		328170-190X								
680XQAHX-*3 (9)	375	Opp	135		8-A-165 8-A-032		328170-190X								
680XSAHX-*3 (10)	325	Opp	185		8-A-165 8-A-032		328170-190X								
823XBAHX-*3 (11)	500	Opp	66		8-A-190		328170-14X								
823XJAHX-*3 (12)	500	Opp	100		8-A-190		328170-14X								
823XMAHX-*3 (13)	500	Opp	117		8-A-190		328170-14X								
823XRAHX-*3 (14)	400	Opp	161		8-A-190		328170-14X								
880XBAHX-*3 (15)	500	Opp	66		8-A-190		328170-14X								
880XDAHX-*3 (16)	500	Opp	78		8-A-190		328170-14X								
880XGAHX-*3 (17)	500	Opp	85		8-A-190		328170-14X								
880XJAHX-*3 (18)	500	Opp	100		8-A-190		328170-14X								
880XMAHX-*3 (19)	500	Opp	117		8-A-190		328170-14X								
880XQAHX-*3 (20)	450	Opp	137		8-A-190		328170-14X								
880XRAHX-*3 (21)	400	Opp	161		8-A-190		328170-14X								
880XTAHX-*3 (22)	350	Opp	208		8-A-190		328170-14X								
ONE SPEED - TWO GEAR - POWERSHIFT (AIR)															
230XAAJX-*3	250	Opp	51		7-A-032(P)	328564X	Furnished	230XAAJX-*3	250	Opp	51		7-A-350		328170-173X
230XBAJX-*3	250	Opp	66		7-A-032(P)	328564X	Furnished	230XBAJX-*3	250	Opp	66		7-A-350		328170-173X
230XDAJX-*3	250	Opp	76		7-A-032(P)	328564X	Furnished	230XDAJX-*3	250	Opp	76		7-A-350		328170-173X
230XKAJX-*3	250	Opp	103		7-A-032(P)	328564X	Furnished	230XKAJX-*3	250	Opp	103		7-A-350		328170-173X
230XQAJX-*3	250	Opp	137		7-A-032(P)	328564X	Furnished	230XQAJX-*3	250	Opp	137		7-A-350		328170-173X
230XUAJX-*3	225	Opp	220		7-A-032(P)	328564X	Furnished	230XUAJX-*3	225	Opp	220		7-A-350		328170-173X

Continued Next Page

CAUTION: 660/680 Series: Applications above 1500 RPM output shaft speed, contact Chelsea Technical Service for approval.

NOTE: The AK & XK output flanges can not be used with the "A" & "C" ratios on the 489 Series P.T.O.s due to mounting stud interference. Use a RA or RB rotatable flange for the XK and the RA for the AK flange.

NOTE: If Ordering the 230/231 Series with the Shaft Brake Option, order the "BA" Output for Automatic Transmissions and the "BD" Output for Manual Transmissions.

(7) Input Gear Part No. 5-P-1004
(8) Input Gear Part No. 5-P-1242
(9) Input Gear Part No. 5-P-1246
(10) Input Gear Part No. 5-P-1322
(11) Input Gear Part No. 5-P-285
(12) Input Gear Part No. 5-P-325
(13) Input Gear Part No. 5-P-283
(14) Input Gear Part No. 5-P-721
(15) Input Gear Part No. 5-P-1100
(16) Input Gear Part No. 5-P-1101
(17) Input Gear Part No. 5-P-1135
(18) Input Gear Part No. 5-P-1102
(19) Input Gear Part No. 5-P-1103
(20) Input Gear Part No. 5-P-1385
(21) Input Gear Part No. 5-P-1104
(22) Input Gear Part No. 5-P-1105

1253-B
1255-B
1453-B

BOTTOM SIDE ONLY	RIGHT SIDE ONLY
TRANSMISSION GEAR DATA: BOT 8-Bolt Opening Gear FORWARD of Centerline 55 Teeth - SPUR **PITCH LINE TO APERTURE FACE:** .4830" (12.2700MM)	**TRANSMISSION GEAR DATA:** R.H. 6-Bolt Opening Gear FORWARD of Centerline 55 Teeth - SPUR **PITCH LINE TO APERTURE FACE:** .6380" (16.2100MM)

Caution: Application Approval Required for P.T.O. Output Shaft Speeds Above 2500 R.P.M.

BOTTOM Side P.T.O. Model	Inter. Torq.	Dir. Rot.	Engine % Hi	Engine % Rev	Filler Block	Adapter Assy.	Stud Kit	RIGHT Side P.T.O. Model	Inter. Torq.	Dir. Rot.	Engine % Hi	Engine % Rev	Filler Block	Adapter Assy.	Stud Kit
ONE SPEED - TWO GEAR - POWERSHIFT (AIR)															
236XDAHX-*3 (7)	250	Opp	101			328564X	Furnished	236KDAHX-*3 (7)	250	Opp	101		7-A-350		7170-5X
236XKAHX-*3 (7)	250	Opp	130			328564X	Furnished	236KKAHX-*3 (7)	250	Opp	130		7-A-350		7170-5X
236XQAHX-*3 (7)	250	Opp	175			328564X	Furnished	236KQAHX-*3 (7)	250	Opp	175		7-A-350		7170-5X
236XUAHX-*3 (7)	225	Opp	200			328564X	Furnished	236KUAHX-*3 (7)	225	Opp	200		7-A-350		7170-5X
885XBAHX-*3 (15)	500	Opp	66		8-A-190		328170-14X								
885XGAHX-*3 (17)	500	Opp	85		8-A-190		328170-14X								
885XJAHX-*3 (18)	500	Opp	100		8-A-190		328170-14X								
885XMAHX-*3 (19)	500	Opp	117		8-A-190		328170-14X								
ONE SPEED - FORWARD & REVERSE															
340XFAHX-*5 (23)	200	Opp	84	89	7-A-140(P)(24)	328564X	Furnished	340XFAHX-*5 (23)	200	Opp	84	89	7-A-140 (24) 7-A-300		7170-5X
352XSAHX-*3 (7)	140	Opp	188	243		328564X	Furnished	352XSAHX-*3 (7)	140	Opp	188	243	7-A-350		7170-5X
863XBAHX-*5	500	Opp	66	81	8-A-190		328170-14X								
GEARED ADAPTERS															
628XAHX-4AH					8-A-248		328170-190X	626KAHX-3AH					7-A-350		7170-5X
								630KAHX-3AH					7-A-350		7170-5X
								645KAHX-3AH					7-A-350		7170-5X

CAUTION: 660/680 Series: Applications above 1500 RPM output shaft speed, contact Chelsea Technical Service for approval.

NOTE: The AK & XK output flanges can not be used with the "A" & "C" ratios on the 489 Series P.T.O.s due to mounting stud interference. Use a RA or RB rotatable flange for the XK and the RA for the AK flange.

NOTE: If Ordering the 230/231 Series with the Shaft Brake Option, order the "BA" Output for Automatic Transmissions and the "BD" Output for Manual Transmissions.

(7) Input Gear Part No. 5-P-1004
(15) Input Gear Part No. 5-P-1100
(17) Input Gear Part No. 5-P-1135
(18) Input Gear Part No. 5-P-1102
(19) Input Gear Part No. 5-P-1103
(23) Input Gear Part No. 5-P-581

(24) Filler block furnished with P.T.O.

Parker Hannifin Corporation
Chelsea Products Division
Olive Branch, MS 38654 USA

1263-A
1265-A
1463-A
PSO140-6A
PSO140-6C

BOTTOM SIDE ONLY

TRANSMISSION GEAR DATA:
BOT 8-Bolt Opening Gear FORWARD of Centerline
54 Teeth - SPUR

PITCH LINE TO APERTURE FACE:
.5660" (14.3800MM)

RIGHT SIDE ONLY

TRANSMISSION GEAR DATA:
R.H. 6-Bolt Opening Gear FORWARD of Centerline
54 Teeth - SPUR

PITCH LINE TO APERTURE FACE:
.7210" (18.3100MM)

Caution: Application Approval Required for P.T.O. Output Shaft Speeds Above 2500 R.P.M.

BOTTOM Side P.T.O. Model	Inter. Torq.	Dir. Rot.	Engine % Hi	Engine % Rev	Filler Block	Adapter Assy.	Stud Kit	RIGHT Side P.T.O. Model	Inter. Torq.	Dir. Rot.	Engine % Hi	Engine % Rev	Filler Block	Adapter Assy.	Stud Kit
ONE SPEED - SINGLE GEAR - MECHANICAL SHIFT															
100XRAHX-*3 (1)	125	Eng	128		7-A-032(P)	310778X	Furnished	100XRAHX-*3 (1)	125	Eng	128		7-A-270		328291-3X
812XKAHX-*5	400	Eng	86		8-A-093		Furnished								
ONE SPEED - TWO GEAR - MECHANICAL SHIFT															
221XCAHX-*3	250	Opp	57		7-A-032 (2)	328564X	Furnished	221XCAHX-*3	250	Opp	57		7-A-270 7-A-032 (2)		328170-35X
221XEAHX-*3	250	Opp	66		7-A-032(P)	310778X	Furnished	221XEAHX-*3	250	Opp	66		7-A-270		328170-35X
221XLAHX-*3	200	Opp	89		7-A-032(P)	310778X	Furnished	221XLAHX-*3	200	Opp	89		7-A-270		328170-35X
221XPAHX-*3	200	Opp	107		7-A-032(P)	310778X	Furnished	221XPAHX-*3	200	Opp	107		7-A-270		328170-35X
442XAAHX-*3 (3)	250	Opp	50		7-A-032(P)	310778X	Furnished	442KAAHX-*3 (3)	250	Opp	50		7-A-270		7170-9X
442XCAHX-*3 (4)	250	Opp	64		7-A-032(P)	310778X	Furnished	442KCAHX-*3 (4)	250	Opp	64		7-A-270		7170-9X
442XFAHX-*3 (5)	250	Opp	80		7-A-032(P)	310778X	Furnished	442KFAHX-*3 (5)	250	Opp	80		7-A-270		7170-9X
442XHAHX-*3 (6)	250	Opp	93		7-A-032(P)	310778X	Furnished	442KHAHX-*3 (6)	250	Opp	93		7-A-270		7170-9X
442XLAHX-*3 (7)	250	Opp	103		7-A-032(P)	310778X	Furnished	442KLAHX-*3 (7)	250	Opp	103		7-A-270		7170-9X
442XQAHX-*3 (7)	225	Opp	111		7-A-032(P)	310778X	Furnished	442KQAHX-*3 (7)	225	Opp	111		7-A-270		7170-9X
442XRAHX-*3 (7)	225	Opp	128		7-A-032(P)	310778X	Furnished	442KRAHX-*3 (7)	225	Opp	128		7-A-270		7170-9X
442XSAHX-*3 (7)	200	Opp	153		7-A-032(P)	310778X	Furnished	442KSAHX-*3 (7)	200	Opp	153		7-A-270		7170-9X
442XUAHX-*3 (7)	195	Opp	182		7-A-032(P)	310778X	Furnished	442KUAHX-*3 (7)	195	Opp	182		7-A-270		7170-9X
442XWAHX-*3 (7)	175	Opp	214		7-A-032(P)	310778X	Furnished	442KWAHX-*3 (7)	175	Opp	214		7-A-270		7170-9X
442XXAHX-*3 (7)	140	Opp	254		7-A-032(P)	310778X	Furnished	442KXAHX-*3 (7)	140	Opp	254		7-A-270		7170-9X
489XAAHX-*3 (3)	250	Opp	50		8-A-062 8-A-093		328170-190X	660KFAHX-*3 (8)	375	Opp	80		7-A-270		7170-9X
489XCAHX-*3 (4)	250	Opp	64		8-A-062 8-A-093		328170-190X	660KQAHX-*3 (9)	375	Opp	111		7-A-270		7170-9X
489XFAHX-*3 (5)	250	Opp	80		8-A-062 8-A-093		328170-190X	660KSAHX-*3 (10)	325	Opp	153		7-A-270		7170-9X
489XHAHX-*3 (6)	250	Opp	93		8-A-062 8-A-093		328170-190X								
489XLAHX-*3 (7)	250	Opp	103		8-A-062 8-A-093		328170-190X								
489XQAHX-*3 (7)	225	Opp	111		8-A-062 8-A-093		328170-190X								
489XRAHX-*3 (7)	225	Opp	128		8-A-062 8-A-093		328170-190X								

Continued Next Page

CAUTION: 660/680 Series: Applications above 1500 RPM output shaft speed, contact Chelsea Technical Service for approval.

NOTE: The AK & XK output flanges can not be used with the "A" & "C" ratios on the 489 Series P.T.O.s due to mounting stud interference. Use a RA or RB rotatable flange for the XK and the RA for the AK flange.

NOTE: If Ordering the 230/231 Series with the Shaft Brake Option, order the "BA" Output for Automatic Transmissions and the "BD" Output for Manual Transmissions.

(1) Gear and Shaft Kit No. KXA-2-P-565
(2) Filler block furnished with P.T.O. but not required
(3) Input Gear Part No. 5-P-1280
(4) Input Gear Part No. 5-P-1287
(5) Input Gear Part No. 5-P-1077
(6) Input Gear Part No. 5-P-1364
(7) Input Gear Part No. 5-P-1004
(8) Input Gear Part No. 5-P-1242
(9) Input Gear Part No. 5-P-1246
(10) Input Gear Part No. 5-P-1322

1263-A
1265-A
1463-A
PSO140-6A
PSO140-6C

BOTTOM SIDE ONLY

TRANSMISSION GEAR DATA:
BOT 8-Bolt Opening Gear FORWARD of Centerline
54 Teeth - SPUR
PITCH LINE TO APERTURE FACE:
.5660" (14.3800MM)

RIGHT SIDE ONLY

TRANSMISSION GEAR DATA:
R.H. 6-Bolt Opening Gear FORWARD of Centerline
54 Teeth - SPUR
PITCH LINE TO APERTURE FACE:
.7210" (18.3100MM)

Caution: Application Approval Required for P.T.O. Output Shaft Speeds Above 2500 R.P.M.

BOTTOM Side P.T.O. Model	Inter. Torq.	Dir. Rot.	Engine % Hi	Engine % Rev	Filler Block	Adapter Assy.	Stud Kit	RIGHT Side P.T.O. Model	Inter. Torq.	Dir. Rot.	Engine % Hi	Engine % Rev	Filler Block	Adapter Assy.	Stud Kit
ONE SPEED - TWO GEAR - MECHANICAL SHIFT															
489XSAHX-*3 (7)	200	Opp	153		8-A-062 8-A-093		328170-190X								
489XUAHX-*3 (7)	195	Opp	182		8-A-062 8-A-093		328170-190X								
489XWAHX-*3 (7)	175	Opp	214		8-A-062 8-A-093		328170-190X								
489XXAHX-*3 (7)	140	Opp	254		8-A-062 8-A-093		328170-190X								
680XFAHX-*3 (8)	375	Opp	80		8-A-062 8-A-093		328170-190X								
680XQAHX-*3 (9)	375	Opp	111		8-A-062 8-A-093		328170-190X								
680XSAHX-*3 (10)	325	Opp	153		8-A-062 8-A-093		328170-190X								
823XBAHX-*3 (11)	500	Opp	54		8-A-093		328170-14X								
823XJAHX-*3 (12)	500	Opp	82		8-A-093		328170-14X								
823XMAHX-*3 (13)	500	Opp	96		8-A-093		328170-14X								
823XRAHX-*3 (14)	400	Opp	133		8-A-093		328170-14X								
880XBAHX-*3 (15)	500	Opp	54		8-A-093		328170-14X								
880XDAHX-*3 (16)	500	Opp	64		8-A-093		328170-14X								
880XGAHX-*3 (17)	500	Opp	70		8-A-093		328170-14X								
880XJAHX-*3 (18)	500	Opp	82		8-A-093		328170-14X								
880XMAHX-*3 (19)	500	Opp	96		8-A-093		328170-14X								
880XQAHX-*3 (20)	450	Opp	113		8-A-093		328170-14X								
880XRAHX-*3 (21)	400	Opp	133		8-A-093		328170-14X								
880XTAHX-*3 (22)	350	Opp	171		8-A-093		328170-14X								
ONE SPEED - TWO GEAR - POWERSHIFT (AIR)															
230XAAJX-*3	250	Opp	42		7-A-032(P)	310778X	Furnished	230XAAJX-*3	250	Opp	42		7-A-270		328170-172X
230XBAJX-*3	250	Opp	54		7-A-032(P)	310778X	Furnished	230XBAJX-*3	250	Opp	54		7-A-270		328170-172X
230XDAJX-*3	250	Opp	63		7-A-032(P)	310778X	Furnished	230XDAJX-*3	250	Opp	63		7-A-270		328170-172X
230XKAJX-*3	250	Opp	85		7-A-032(P)	310778X	Furnished	230XKAJX-*3	250	Opp	85		7-A-270		328170-172X
230XQAJX-*3	250	Opp	113		7-A-032(P)	310778X	Furnished	230XQAJX-*3	250	Opp	113		7-A-270		328170-172X
230XUAJX-*3	225	Opp	181		7-A-032(P)	310778X	Furnished	230XUAJX-*3	225	Opp	181		7-A-270		328170-172X

Continued Next Page

CAUTION: 660/680 Series: Applications above 1500 RPM output shaft speed, contact Chelsea Technical Service for approval.

NOTE: The AK & XK output flanges can not be used with the "A" & "C" ratios on the 489 Series P.T.O.s due to mounting stud interference. Use a RA or RB rotatable flange for the XK and the RA for the AK flange.

NOTE: If Ordering the 230/231 Series with the Shaft Brake Option, order the "BA" Output for Automatic Transmissions and the "BD" Output for Manual Transmissions.

(7) Input Gear Part No. 5-P-1004
(8) Input Gear Part No. 5-P-1242
(9) Input Gear Part No. 5-P-1246
(10) Input Gear Part No. 5-P-1322
(11) Input Gear Part No. 5-P-285
(12) Input Gear Part No. 5-P-325
(13) Input Gear Part No. 5-P-283
(14) Input Gear Part No. 5-P-721
(15) Input Gear Part No. 5-P-1100
(16) Input Gear Part No. 5-P-1101
(17) Input Gear Part No. 5-P-1135
(18) Input Gear Part No. 5-P-1102
(19) Input Gear Part No. 5-P-1103
(20) Input Gear Part No. 5-P-1385
(21) Input Gear Part No. 5-P-1104
(22) Input Gear Part No. 5-P-1105

Parker Hannifin Corporation
Chelsea Products Division
Olive Branch, MS 38654 USA

1263-A
1265-A
1463-A
PSO140-6A
PSO140-6C

BOTTOM SIDE ONLY

TRANSMISSION GEAR DATA:
BOT 8-Bolt Opening Gear FORWARD of Centerline
54 Teeth - SPUR

PITCH LINE TO APERTURE FACE:
.5660" (14.3800MM)

RIGHT SIDE ONLY

TRANSMISSION GEAR DATA:
R.H. 6-Bolt Opening Gear FORWARD of Centerline
54 Teeth - SPUR

PITCH LINE TO APERTURE FACE:
.7210" (18.3100MM)

Caution: Application Approval Required for P.T.O. Output Shaft Speeds Above 2500 R.P.M.

BOTTOM Side P.T.O. Model	Inter. Torq.	Dir. Rot.	Engine % Hi	Engine % Rev	Filler Block	Adapter Assy.	Stud Kit	RIGHT Side P.T.O. Model	Inter. Torq.	Dir. Rot.	Engine % Hi	Engine % Rev	Filler Block	Adapter Assy.	Stud Kit
ONE SPEED - TWO GEAR - POWERSHIFT (AIR)															
236XDAHX-*3 (7)	250	Opp	83		7-A-032(P)	310778X	Furnished	236KDAHX-*3 (7)	250	Opp	83		7-A-270		7170-9X
236XKAHX-*3 (7)	250	Opp	106		7-A-032(P)	310778X	Furnished	236KKAHX-*3 (7)	250	Opp	106		7-A-270		7170-9X
236XQAHX-*3 (7)	250	Opp	144		7-A-032(P)	310778X	Furnished	236KQAHX-*3 (7)	250	Opp	144		7-A-270		7170-9X
236XUAHX-*3 (7)	225	Opp	165		7-A-032(P)	310778X	Furnished	236KUAHX-*3 (7)	225	Opp	165		7-A-270		7170-9X
885XBAHX-*3 (15)	500	Opp	54		8-A-093		328170-14X								
885XGAHX-*3 (17)	500	Opp	70		8-A-093		328170-14X								
885XJAHX-*3 (18)	500	Opp	82		8-A-093		328170-14X								
885XMAHX-*3 (19)	500	Opp	96		8-A-093		328170-14X								
ONE SPEED - FORWARD & REVERSE															
340SFAHX-*5 (23)	200	Opp	70	73	7-A-093(P) 7-A-140 (24)	328564X	Furnished	340XFAHX-*5 (23)	200	Opp	70	73	7-A-140 (24) 7-A-240		7170-5X
352XSAHX-*3 (7)	140	Opp	155	200	7-A-032(P)	310778X	Furnished	352XSAHX-*3 (7)	140	Opp	155	200	7-A-270		7170-9X
863XBAHX-*5	500	Opp	54	67	8-A-093		328170-14X								
ONE SPEED - DUAL SHAFT															
452XSAHX-*3 (7)	140	Opp	155		7-A-032(P)	310778X	Furnished	452XSAHX-*3 (7)	140	Opp	155		7-A-270		7170-9X
GEARED ADAPTERS															
628XAHX-3AH					8-A-190		328170-190X	626KAHX-3AH					7-A-270		7170-9X
								630KAHX-3AH					7-A-270		7170-9X
								645KAHX-3AH					7-A-270		7170-9X

CAUTION: 660/680 Series: Applications above 1500 RPM output shaft speed, contact Chelsea Technical Service for approval.

NOTE: The AK & XK output flanges can not be used with the "A" & "C" ratios on the 489 Series P.T.O.s due to mounting stud interference. Use a RA or RB rotatable flange for the XK and the RA for the AK flange.

NOTE: If Ordering the 230/231 Series with the Shaft Brake Option, order the "BA" Output for Automatic Transmissions and the "BD" Output for Manual Transmissions.

(7) Input Gear Part No. 5-P-1004
(15) Input Gear Part No. 5-P-1100
(17) Input Gear Part No. 5-P-1135
(18) Input Gear Part No. 5-P-1102
(19) Input Gear Part No. 5-P-1103
(23) Input Gear Part No. 5-P-581
(24) Filler block furnished with P.T.O.

1007-3A	PSO125-6L
1007-3A	
1207-3A	
1263-B	
PSO120-8LL	

BOTTOM SIDE ONLY

TRANSMISSION GEAR DATA:
BOT 8-Bolt Opening Gear FORWARD of Centerline
54 Teeth - SPUR
PITCH LINE TO APERTURE FACE:
.5660" (14.3800MM)

RIGHT SIDE ONLY

TRANSMISSION GEAR DATA:
R.H. 6-Bolt Opening Gear FORWARD of Centerline
54 Teeth - SPUR
PITCH LINE TO APERTURE FACE:
.7210" (18.3100MM)

Caution: Application Approval Required for P.T.O. Output Shaft Speeds Above 2500 R.P.M.

BOTTOM Side P.T.O. Model	Inter. Torq.	Dir. Rot.	Engine % Hi	Engine % Rev	Filler Block	Adapter Assy.	Stud Kit	RIGHT Side P.T.O. Model	Inter. Torq.	Dir. Rot.	Engine % Hi	Engine % Rev	Filler Block	Adapter Assy.	Stud Kit
ONE SPEED - SINGLE GEAR - MECHANICAL SHIFT															
100XRAHX-*3 (1)	125	Eng	128		7-A-062(P)	328564X	Furnished	100XRAHX-*3 (1)	125	Eng	128		7-A-400		328291-4X
812XKAHX-*3	400	Eng	86		8-A-248		328170-117X								
ONE SPEED - TWO GEAR - MECHANICAL SHIFT															
221XCAHX-*3	250	Opp	57		7-A-093(P) 7-A-032 (2)	328564X	328170-102X	221XCAHX-*3	250	Opp	57		7-A-400 7-A-032 (2)		328170-33X
221XEAHX-*3	250	Opp	66		7-A-062(P)	328564X	Furnished	221XEAHX-*3	250	Opp	66		7-A-400		328170-35X
221XLAHX-*3	200	Opp	89		7-A-062(P)	328564X	Furnished	221XLAHX-*3	200	Opp	89		7-A-400		328170-35X
221XPAHX-*3	200	Opp	107		7-A-062(P)	328564X	Furnished	221XPAHX-*3	200	Opp	107		7-A-400		328170-33X
442XAAHX-*3 (3)	250	Opp	50		7-A-062(P)	328564X	Furnished	442KAAHX-*3 (3)	250	Opp	50		7-A-032 7-A-350		7170-6X
442XCAHX-*3 (4)	250	Opp	64		7-A-062(P)	328564X	Furnished	442KCAHX-*3 (4)	250	Opp	64		7-A-032 7-A-350		7170-6X
442XFAHX-*3 (5)	250	Opp	80		7-A-062(P)	328564X	Furnished	442KFAHX-*3 (5)	250	Opp	80		7-A-032 7-A-350		7170-6X
442XHAHX-*3 (6)	250	Opp	93		7-A-062(P)	328564X	Furnished	442KHAHX-*3 (6)	250	Opp	93		7-A-032 7-A-350		7170-6X
442XLAHX-*3 (7)	250	Opp	103		7-A-062(P)	328564X	Furnished	442KLAHX-*3 (7)	250	Opp	103		7-A-032 7-A-350		7170-6X
442XQAHX-*3 (7)	225	Opp	111		7-A-062(P)	328564X	Furnished	442KQAHX-*3 (7)	225	Opp	111		7-A-032 7-A-350		7170-6X
442XRAHX-*3 (7)	225	Opp	128		7-A-062(P)	328564X	Furnished	442KRAHX-*3 (7)	225	Opp	128		7-A-032 7-A-350		7170-6X
442XSAHX-*3 (7)	200	Opp	153		7-A-062(P)	328564X	Furnished	442KSAHX-*3 (7)	200	Opp	153		7-A-032 7-A-350		7170-6X
442XUAHX-*3 (7)	195	Opp	182		7-A-062(P)	328564X	Furnished	442KUAHX-*3 (7)	195	Opp	182		7-A-032 7-A-350		7170-6X
442XWAHX-*3 (7)	175	Opp	214		7-A-062(P)	328564X	Furnished	442KWAHX-*3 (7)	175	Opp	214		7-A-032 7-A-350		7170-6X
442XXAHX-*3 (7)	140	Opp	254		7-A-062(P)	328564X	Furnished	442KXAHX-*3 (7)	140	Opp	254		7-A-032 7-A-350		7170-6X
489XAAHX-*3 (3)	250	Opp	50		8-A-165 8-A-032		328170-204X	660KFAHX-*3 (8)	375	Opp	80		7-A-032 7-A-350		7170-6X
489XCAHX-*3 (4)	250	Opp	64		8-A-165 8-A-032		328170-204X	660KQAHX-*3 (9)	375	Opp	111		7-A-032 7-A-350		7170-6X

Continued Next Page

CAUTION: 660/680 Series: Applications above 1500 RPM output shaft speed, contact Chelsea Technical Service for approval.

NOTE: The AK & XK output flanges can not be used with the "A" & "C" ratios on the 489 Series P.T.O.s due to mounting stud interference. Use a RA or RB rotatable flange for the XK and the RA for the AK flange.

NOTE: If Ordering the 230/231 Series with the Shaft Brake Option, order the "BA" Output for Automatic Transmissions and the "BD" Output for Manual Transmissions.

(1) Gear and Shaft Kit No. KXA-2-P-565
(2) Filler block furnished with P.T.O. but not required
(3) Input Gear Part No. 5-P-1280
(4) Input Gear Part No. 5-P-1287
(5) Input Gear Part No. 5-P-1077
(6) Input Gear Part No. 5-P-1364
(7) Input Gear Part No. 5-P-1004
(8) Input Gear Part No. 5-P-1242
(9) Input Gear Part No. 5-P-1246

1007-3A	PSO125-6L
1007-3A	
1207-3A	
1263-B	
PSO120-8LL	

BOTTOM SIDE ONLY

TRANSMISSION GEAR DATA:
BOT 8-Bolt Opening Gear FORWARD of Centerline
54 Teeth - SPUR

PITCH LINE TO APERTURE FACE:
.5660" (14.3800MM)

RIGHT SIDE ONLY

TRANSMISSION GEAR DATA:
R.H. 6-Bolt Opening Gear FORWARD of Centerline
54 Teeth - SPUR

PITCH LINE TO APERTURE FACE:
.7210" (18.3100MM)

Caution: Application Approval Required for P.T.O. Output Shaft Speeds Above 2500 R.P.M.

ONE SPEED - TWO GEAR - MECHANICAL SHIFT

BOTTOM Side P.T.O. Model	Inter. Torq.	Dir. Rot.	Engine % Hi	Engine % Rev	Filler Block	Adapter Assy.	Stud Kit	RIGHT Side P.T.O. Model	Inter. Torq.	Dir. Rot.	Engine % Hi	Engine % Rev	Filler Block	Adapter Assy.	Stud Kit
489XFAHX-*3 (5)	250	Opp	80		8-A-165 8-A-032		328170-204X	660KSAHX-*3 (10)	325	Opp	153		7-A-032 7-A-350		7170-6X
489XHAHX-*3 (6)	250	Opp	93		8-A-165 8-A-032		328170-204X								
489XLAHX-*3 (7)	250	Opp	103		8-A-165 8-A-032		328170-204X								
489XQAHX-*3 (7)	225	Opp	111		8-A-165 8-A-032		328170-204X								
489XRAHX-*3 (7)	225	Opp	128		8-A-165 8-A-032		328170-204X								
489XSAHX-*3 (7)	200	Opp	153		8-A-165 8-A-032		328170-204X								
489XUAHX-*3 (7)	195	Opp	182		8-A-165 8-A-032		328170-204X								
489XWAHX-*3 (7)	175	Opp	214		8-A-165 8-A-032		328170-204X								
489XXAHX-*3 (7)	140	Opp	254		8-A-165 8-A-032		328170-204X								
680XFAHX-*3 (8)	375	Opp	80		8-A-165 8-A-032		328170-204X								
680XQAHX-*3 (9)	375	Opp	111		8-A-165 8-A-032		328170-204X								
680XSAHX-*3 (10)	325	Opp	153		8-A-165 8-A-032		328170-204X								
823XBAHX-*3 (11)	500	Opp	54		8-A-248		328170-14X								
823XJAHX-*3 (12)	500	Opp	82		8-A-248		328170-14X								
823XMAHX-*3 (13)	500	Opp	96		8-A-248		328170-14X								
823XRAHX-*3 (14)	400	Opp	133		8-A-248		328170-14X								
880XBAHX-*3 (15)	500	Opp	54		8-A-248		328170-14X								
880XDAHX-*3 (16)	500	Opp	64		8-A-248		328170-14X								
880XGAHX-*3 (17)	500	Opp	70		8-A-248		328170-14X								
880XJAHX-*3 (18)	500	Opp	82		8-A-248		328170-14X								
880XMAHX-*3 (19)	500	Opp	96		8-A-248		328170-14X								
880XQAHX-*3 (20)	450	Opp	113		8-A-248		328170-14X								

Continued Next Page

CAUTION: 660/680 Series: Applications above 1500 RPM output shaft speed, contact Chelsea Technical Service for approval.

NOTE: The AK & XK output flanges can not be used with the "A" & "C" ratios on the 489 Series P.T.O.s due to mounting stud interference. Use a RA or RB rotatable flange for the XK and the RA for the AK flange.

NOTE: If Ordering the 230/231 Series with the Shaft Brake Option, order the "BA" Output for Automatic Transmissions and the "BD" Output for Manual Transmissions.

(5) Input Gear Part No. 5-P-1077
(6) Input Gear Part No. 5-P-1364
(7) Input Gear Part No. 5-P-1004
(8) Input Gear Part No. 5-P-1242
(9) Input Gear Part No. 5-P-1246
(10) Input Gear Part No. 5-P-1322
(11) Input Gear Part No. 5-P-285
(12) Input Gear Part No. 5-P-325
(13) Input Gear Part No. 5-P-283
(14) Input Gear Part No. 5-P-721
(15) Input Gear Part No. 5-P-1100
(16) Input Gear Part No. 5-P-1101
(17) Input Gear Part No. 5-P-1135
(18) Input Gear Part No. 5-P-1102
(19) Input Gear Part No. 5-P-1103
(20) Input Gear Part No. 5-P-1385

Parker Hannifin Corporation
Chelsea Products Division
Olive Branch, MS 38654 USA

1007-3A	PSO125-6L
1007-3A	
1207-3A	
1263-B	
PSO120-8LL	

BOTTOM SIDE ONLY

TRANSMISSION GEAR DATA:
BOT 8-Bolt Opening Gear FORWARD of Centerline
54 Teeth - SPUR
PITCH LINE TO APERTURE FACE:
.5660" (14.3800MM)

RIGHT SIDE ONLY

TRANSMISSION GEAR DATA:
R.H. 6-Bolt Opening Gear FORWARD of Centerline
54 Teeth - SPUR
PITCH LINE TO APERTURE FACE:
.7210" (18.3100MM)

Caution: Application Approval Required for P.T.O. Output Shaft Speeds Above 2500 R.P.M.

BOTTOM Side P.T.O. Model	Inter. Torq.	Dir. Rot.	Engine % Hi	Engine % Rev	Filler Block	Adapter Assy.	Stud Kit	RIGHT Side P.T.O. Model	Inter. Torq.	Dir. Rot.	Engine % Hi	Engine % Rev	Filler Block	Adapter Assy.	Stud Kit
ONE SPEED - TWO GEAR - MECHANICAL SHIFT															
880XRAHX-*3 (21)	400	Opp	133		8-A-248		328170-14X								
880XTAHX-*3 (22)	350	Opp	171		8-A-248		328170-14X								
ONE SPEED - TWO GEAR - POWERSHIFT (AIR)															
230XAAJX-*3	250	Opp	42		7-A-093(P)	328564X	328170-172X	230XAAJX-*3	250	Opp	42		7-A-400		328170-174X
230XBAJX-*3	250	Opp	54		7-A-093(P)	328564X	328170-172X	230XBAJX-*3	250	Opp	54		7-A-400		328170-174X
230XDAJX-*3	250	Opp	63		7-A-093(P)	328564X	328170-172X	230XDAJX-*3	250	Opp	63		7-A-400		328170-174X
230XKAJX-*3	250	Opp	85		7-A-093(P)	328564X	328170-172X	230XKAJX-*3	250	Opp	85		7-A-400		328170-174X
230XQAJX-*3	250	Opp	113		7-A-093(P)	328564X	328170-172X	230XQAJX-*3	250	Opp	113		7-A-400		328170-174X
230XUAJX-*3	225	Opp	181		7-A-093(P)	328564X	328170-172X	230XUAJX-*3	225	Opp	181		7-A-400		328170-174X
236XDAHX-*3 (7)	250	Opp	83		7-A-062(P)	328564X	Furnished	236KDAHX-*3 (7)	250	Opp	83		7-A-032 7-A-350		7170-6X
236XKAHX-*3 (7)	250	Opp	106		7-A-062(P)	328564X	Furnished	236KKAHX-*3 (7)	250	Opp	106		7-A-032 7-A-350		7170-6X
236XQAHX-*3 (7)	250	Opp	144		7-A-062(P)	328564X	Furnished	236KQAHX-*3 (7)	250	Opp	144		7-A-032 7-A-350		7170-6X
236XUAHX-*3 (7)	225	Opp	165		7-A-062(P)	328564X	Furnished	236KUAHX-*3 (7)	225	Opp	165		7-A-032 7-A-350		7170-6X
885XBAHX-*3 (15)	500	Opp	54		8-A-248		328170-14X								
885XGAHX-*3 (17)	500	Opp	70		8-A-248		328170-14X								
885XJAHX-*3 (18)	500	Opp	82		8-A-248		328170-14X								
885XMAHX-*3 (19)	500	Opp	96		8-A-248		328170-14X								
ONE SPEED - FORWARD & REVERSE															
340SFAHX-*5 (23)	200	Opp	70	73	7-A-200(P) 7-A-140 (2)	328564X	Furnished	340XFAHX-*5 (23)	200	Opp	70	73	7-A-140 (24) 7-A-350		7170-6X
352XSAHX-*3 (7)	140	Opp	155	200	7-A-062(P)	328564X	Furnished	352XSAHX-*3 (7)	140	Opp	155	200	7-A-350 7-A-032		7170-6X
863XBAHX-*5	500	Opp	54	67	8-A-248		Furnished								
ONE SPEED - DUAL SHAFT															
452XSAHX-*3 (7)	140	Opp	155		7-A-062(P)	328564X	Furnished	452XSAHX-*3 (7)	140	Opp	155		7-A-350 7-A-032		7170-6X

Continued Next Page

CAUTION: 660/680 Series: Applications above 1500 RPM output shaft speed, contact Chelsea Technical Service for approval.

NOTE: The AK & XK output flanges can not be used with the "A" & "C" ratios on the 489 Series P.T.O.s due to mounting stud interference. Use a RA or RB rotatable flange for the XK and the RA for the AK flange.

NOTE: If Ordering the 230/231 Series with the Shaft Brake Option, order the "BA" Output for Automatic Transmissions and the "BD" Output for Manual Transmissions.

(2) Filler block furnished with P.T.O. but not required
(7) Input Gear Part No. 5-P-1004
(15) Input Gear Part No. 5-P-1100
(17) Input Gear Part No. 5-P-1135
(18) Input Gear Part No. 5-P-1102
(19) Input Gear Part No. 5-P-1103
(21) Input Gear Part No. 5-P-1104
(22) Input Gear Part No. 5-P-1105
(23) Input Gear Part No. 5-P-581
(24) Filler block furnished with P.T.O.

Parker Hannifin Corporation
Chelsea Products Division
Olive Branch, MS 38654 USA

1007-3A	PSO125-6L
1007-3A	
1207-3A	
1263-B	
PSO120-8LL	

BOTTOM SIDE ONLY

TRANSMISSION GEAR DATA:
BOT 8-Bolt Opening Gear FORWARD of Centerline
54 Teeth - SPUR

PITCH LINE TO APERTURE FACE:
.5660" (14.3800MM)

RIGHT SIDE ONLY

TRANSMISSION GEAR DATA:
R.H. 6-Bolt Opening Gear FORWARD of Centerline
54 Teeth - SPUR

PITCH LINE TO APERTURE FACE:
.7210" (18.3100MM)

Caution: Application Approval Required for P.T.O. Output Shaft Speeds Above 2500 R.P.M.

GEARED ADAPTERS

BOTTOM Side P.T.O. Model	Inter. Torq.	Dir. Rot.	Engine % Hi	Engine % Rev	Filler Block	Adapter Assy.	Stud Kit	RIGHT Side P.T.O. Model	Inter. Torq.	Dir. Rot.	Engine % Hi	Engine % Rev	Filler Block	Adapter Assy.	Stud Kit
628XAHX-3AH					8-A-248		Furnished	626KAHX-3AH					7-A-032 7-A-350		7170-6X
								630KAHX-3AH					7-A-032 7-A-350		7170-6X
								645KAHX-3AH					7-A-032 7-A-350		7170-6X

CAUTION: 660/680 Series: Applications above 1500 RPM output shaft speed, contact Chelsea Technical Service for approval.

NOTE: The AK & XK output flanges can not be used with the "A" & "C" ratios on the 489 Series P.T.O.s due to mounting stud interference. Use a RA or RB rotatable flange for the XK and the RA for the AK flange.

NOTE: If Ordering the 230/231 Series with the Shaft Brake Option, order the "BA" Output for Automatic Transmissions and the "BD" Output for Manual Transmissions.

1007-2A	1262-A
1007-2A	1264-A
1062-A	1362-A
1064-A	1462-A
1207-2A	

BOTTOM SIDE ONLY

TRANSMISSION GEAR DATA:
BOT 8-Bolt Opening Gear FORWARD of Centerline
45 Teeth - SPUR
PITCH LINE TO APERTURE FACE:
1.3160" (33.4300MM)

RIGHT SIDE ONLY

TRANSMISSION GEAR DATA:
R.H. 6-Bolt Opening Gear FORWARD of Centerline
45 Teeth - SPUR
PITCH LINE TO APERTURE FACE:
1.4710" (37.3600MM)

Caution: Application Approval Required for P.T.O. Output Shaft Speeds Above 2500 R.P.M.

BOTTOM Side P.T.O. Model	Inter. Torq.	Dir. Rot.	Engine % Hi	Engine % Rev	Filler Block	Adapter Assy.	Stud Kit	RIGHT Side P.T.O. Model	Inter. Torq.	Dir. Rot.	Engine % Hi	Engine % Rev	Filler Block	Adapter Assy.	Stud Kit
ONE SPEED - SINGLE GEAR - MECHANICAL SHIFT															
812ZKCPX-*3	400	Eng	61			Furnished		100XRAHX-*3 (1)	125	Opp	94		7-A-1640(T)	328530-1X	7170-49X
ONE SPEED - TWO GEAR - MECHANICAL SHIFT															
823ZBAHX-*3 (6)	500	Opp	40		8-A-295 8-A-093	328170-131X		221XCAHX-*3	250	Eng	42		7-A-032(P)(2) 7-A-1640(T)	328530-1X	328170-36X
823ZJAHX-*3 (7)	500	Opp	60		8-A-295 8-A-093	328170-131X		221XEAHX-*3	250	Eng	48		7-A-1640(T)	328530-1X	328170-36X
823ZMAHX-*3 (8)	500	Opp	70		8-A-295 8-A-093	328170-131X		221XLAHX-*3	200	Eng	65		7-A-1640(T)	328530-1X	328170-36X
880ZBAHX-*3 (9)	500	Opp	40		8-A-295 8-A-093	328170-131X		221XPAHX-*3	200	Eng	78		7-A-1640(T)	328530-1X	328170-36X
880ZDAHX-*3 (10)	500	Opp	47		8-A-295 8-A-093	328170-131X		442KFAHX-*3 (3)	250	Eng	58		7-A-1640(T)	328530-1X	7170-29X
880ZGAHX-*3 (11)	500	Opp	51		8-A-295 8-A-093	328170-131X		442KHAHX-*3 (4)	250	Eng	67		7-A-1640(T)	328530-1X	7170-29X
880ZJAHX-*3 (12)	500	Opp	60		8-A-295 8-A-093	328170-131X		442KLAHX-*3 (5)	250	Eng	75		7-A-1640(T)	328530-1X	7170-29X
880ZMAHX-*3 (13)	500	Opp	70		8-A-295 8-A-093	328170-131X		442KQAHX-*3 (5)	225	Eng	81		7-A-1640(T)	328530-1X	7170-29X
880ZQAHX-*3 (14)	450	Opp	82		8-A-295 8-A-093	328170-131X		442KRAHX-*3 (5)	225	Eng	94		7-A-1640(T)	328530-1X	7170-29X
880ZTAHX-*3 (15)	350	Opp	125		8-A-295 8-A-093	328170-131X		442KSAHX-*3 (5)	200	Eng	112		7-A-1640(T)	328530-1X	7170-29X
								442KUAHX-*3 (5)	195	Eng	133		7-A-1640(T)	328530-1X	7170-29X
								442KWAHX-*3 (5)	175	Eng	156		7-A-1640(T)	328530-1X	7170-29X
								442KXAHX-*3 (5)	140	Eng	185		7-A-1640(T)	328530-1X	7170-29X
ONE SPEED - TWO GEAR - POWERSHIFT (AIR)															
885ZBAHX-*3 (9)	500	Opp	40		8-A-295 8-A-093	328170-131X		236KDAHX-*3 (5)	250	Eng	61		7-A-1640(T)	328530-1X	7170-29X
885ZGAHX-*3 (11)	500	Opp	51		8-A-295 8-A-093	328170-131X		236KKAHX-*3 (5)	250	Eng	78		7-A-1640(T)	328530-1X	7170-29X
885ZJAHX-*3 (12)	500	Opp	60		8-A-295 8-A-093	328170-131X		236KQAHX-*3 (5)	250	Eng	105		7-A-1640(T)	328530-1X	7170-29X

Continued Next Page

NOTE: 812 Series output shaft hits auxiliary transmission housing on 1007-2A, 1207-2A.

NOTE: No adapters are available for the 8-bolt opening.

NOTE: For trans, models 1262A, 1264A, and 1462A, P.T.O. speeds multiply speeds shown by 1.14.

(1) Gear and Shaft Kit No. KXA-2-P-565
(2) Filler block furnished with P.T.O.
(3) Input Gear Part No. 5-P-1077
(4) Input Gear Part No. 5-P-1364
(5) Input Gear Part No. 5-P-1004
(6) Input Gear Part No. 5-P-285
(7) Input Gear Part No. 5-P-325
(8) Input Gear Part No. 5-P-283
(9) Input Gear Part No. 5-P-1100
(10) Input Gear Part No. 5-P-1101
(11) Input Gear Part No. 5-P-1135
(12) Input Gear Part No. 5-P-1102
(13) Input Gear Part No. 5-P-1103
(14) Input Gear Part No. 5-P-1385
(15) Input Gear Part No. 5-P-1105

Parker Hannifin Corporation
Chelsea Products Division
Olive Branch, MS 38654 USA

1007-2A	1262-A
1007-2A	1264-A
1062-A	1362-A
1064-A	1462-A
1207-2A	

BOTTOM SIDE ONLY

TRANSMISSION GEAR DATA:
BOT 8-Bolt Opening Gear FORWARD of Centerline
45 Teeth - SPUR

PITCH LINE TO APERTURE FACE:
1.3160" (33.4300MM)

RIGHT SIDE ONLY

TRANSMISSION GEAR DATA:
R.H. 6-Bolt Opening Gear FORWARD of Centerline
45 Teeth - SPUR

PITCH LINE TO APERTURE FACE:
1.4710" (37.3600MM)

Caution: Application Approval Required for P.T.O. Output Shaft Speeds Above 2500 R.P.M.

BOTTOM Side P.T.O. Model	Inter. Torq.	Dir. Rot.	Engine % Hi	Engine % Rev	Filler Block	Adapter Assy.	Stud Kit	RIGHT Side P.T.O. Model	Inter. Torq.	Dir. Rot.	Engine % Hi	Engine % Rev	Filler Block	Adapter Assy.	Stud Kit
ONE SPEED - TWO GEAR - POWERSHIFT (AIR)															
885ZMAHX-*3 (13)	500	Opp	70		8-A-295 8-A-093		328170-131X	236KUAHX-*3 (5)	225	Eng	120		7-A-1640(T)	328530-1X	7170-29X
ONE SPEED - FORWARD & REVERSE															
								340XFAHX-*5 (16)	200	Eng	51	53	7-A-140(P)(2) 7-A-1640(T)	328530-1X	7170-28X
								352XSAHX-*3 (5)	140	Eng	113	146	7-A-1640(T)	328530-1X	7170-29X
ONE SPEED - DUAL SHAFT															
								452XSAHX-*3 (5)	140	Eng	113		7-A-1640(T)	328530-1X	7170-29X

NOTE: 812 Series output shaft hits auxiliary transmission housing on 1007-2A, 1207-2A.

NOTE: No adapters are available for the 8-bolt opening.

NOTE: For trans, models 1262A, 1264A, and 1462A, P.T.O. speeds multiply speeds shown by 1.14.

(2) Filler block furnished with P.T.O.
(5) Input Gear Part No. 5-P-1004
(13) Input Gear Part No. 5-P-1103
(16) Input Gear Part No. 5-P-581

Parker Hannifin Corporation
Chelsea Products Division
Olive Branch, MS 38654 USA

1252-A
1254-A
1452-A
PS140-5

BOTTOM SIDE ONLY

TRANSMISSION GEAR DATA:
BOT 8-Bolt Opening Gear FORWARD of Centerline
44 Teeth - SPUR
PITCH LINE TO APERTURE FACE:
1.4000" (35.5600MM)

RIGHT SIDE ONLY

TRANSMISSION GEAR DATA:
R.H. 6-Bolt Opening Gear FORWARD of Centerline
44 Teeth - SPUR
PITCH LINE TO APERTURE FACE:
1.5540" (39.4700MM)

Caution: Application Approval Required for P.T.O. Output Shaft Speeds Above 2500 R.P.M.

BOTTOM Side P.T.O. Model	Inter. Torq.	Dir. Rot.	Engine % Hi	Engine % Rev	Filler Block	Adapter Assy.	Stud Kit	RIGHT Side P.T.O. Model	Inter. Torq.	Dir. Rot.	Engine % Hi	Engine % Rev	Filler Block	Adapter Assy.	Stud Kit
ONE SPEED - SINGLE GEAR - MECHANICAL SHIFT															
								100XRAHX-*3 (1)	125	Opp	99		7-A-1520(T)	328530-1X	7170-50X
ONE SPEED - TWO GEAR - MECHANICAL SHIFT															
823ZBAHX-*3 (6)	500	Opp	42		8-A-295		328170-130X	221XCAHX-*3	250	Eng	44		7-A-032(P)(2) 7-A-1520(T)	328530-1X	328170-36X
823ZJAHX-*3 (7)	500	Opp	63		8-A-295		328170-130X	221XEAHX-*3	250	Eng	51		7-A-1520(T)	328530-1X	328170-36X
823ZMAHX-*3 (8)	500	Opp	74		8-A-295		328170-130X	221XLAHX-*3	200	Eng	68		7-A-1520(T)	328530-1X	328170-36X
880ZBAHX-*3 (9)	500	Opp	42		8-A-295		328170-130X	221XPAHX-*3	200	Eng	82		7-A-1520(T)	328530-1X	328170-36X
880ZDAHX-*3 (10)	500	Opp	49		8-A-295		328170-130X	442KFAHX-*3 (3)	250	Eng	61		7-A-1520(T)	328530-1X	7170-28X
880ZGAHX-*3 (11)	500	Opp	54		8-A-295		328170-130X	442KHAHX-*3 (4)	250	Eng	71		7-A-1520(T)	328530-1X	7170-28X
880ZJAHX-*3 (12)	500	Opp	63		8-A-295		328170-130X	442KLAHX-*3 (5)	250	Eng	79		7-A-1520(T)	328530-1X	7170-28X
880ZMAHX-*3 (13)	500	Opp	74		8-A-295		328170-130X	442KQAHX-*3 (5)	225	Eng	85		7-A-1520(T)	328530-1X	7170-28X
880ZQAHX-*3 (14)	450	Opp	87		8-A-295		328170-130X	442KRAHX-*3 (5)	225	Eng	99		7-A-1520(T)	328530-1X	7170-28X
880ZRAHX-*3 (15)	400	Opp	102		8-A-295		328170-130X	442KSAHX-*3 (5)	200	Eng	117		7-A-1520(T)	328530-1X	7170-28X
880ZTAHX-*3 (16)	350	Opp	132		8-A-295		328170-130X	442KUAHX-*3 (5)	195	Eng	140		7-A-1520(T)	328530-1X	7170-28X
								442KWAHX-*3 (5)	175	Eng	165		7-A-1520(T)	328530-1X	7170-28X
								442KXAHX-*3 (5)	140	Eng	195		7-A-1520(T)	328530-1X	7170-28X
ONE SPEED - TWO GEAR - POWERSHIFT (AIR)															
885ZBAHX-*3 (9)	500	Opp	42		8-A-295		328170-130X	236KDAHX-*3 (5)	250	Eng	64		7-A-1520(T)	328530-1X	7170-28X
885ZGAHX-*3 (11)	500	Opp	54		8-A-295		328170-130X	236KKAHX-*3 (5)	250	Eng	82		7-A-1520(T)	328530-1X	7170-28X
885ZJAHX-*3 (12)	500	Opp	63		8-A-295		328170-130X	236KQAHX-*3 (5)	250	Eng	111		7-A-1520(T)	328530-1X	7170-28X
885ZMAHX-*3 (13)	500	Opp	74		8-A-295		328170-130X	236KUAHX-*3 (5)	225	Eng	127		7-A-1520(T)	328530-1X	7170-28X
ONE SPEED - FORWARD & REVERSE															
								340XFAHX-*5 (17)	200	Eng	53	56	7-A-140(P)(2) 7-A-1520(T)	328530-1X	7170-28X
								352XSAHX-*3 (5)	140	Eng	119	154	7-A-1520(T)	328530-1X	7170-28X
ONE SPEED - DUAL SHAFT															
								452XSAHX-*3 (5)	140	Eng	119		7-A-1520(T)	328530-1X	7170-28X

NOTE: No adapters are available for the 8-bolt opening.

(1) Gear and Shaft Kit No. KXA-2-P-565
(2) Filler block furnished with P.T.O.
(3) Input Gear Part No. 5-P-1077
(4) Input Gear Part No. 5-P-1364
(5) Input Gear Part No. 5-P-1004
(6) Input Gear Part No. 5-P-285
(7) Input Gear Part No. 5-P-325
(8) Input Gear Part No. 5-P-283
(9) Input Gear Part No. 5-P-1100
(10) Input Gear Part No. 5-P-1101
(11) Input Gear Part No. 5-P-1135
(12) Input Gear Part No. 5-P-1102
(13) Input Gear Part No. 5-P-1103
(14) Input Gear Part No. 5-P-1385
(15) Input Gear Part No. 5-P-1104
(16) Input Gear Part No. 5-P-1105
(17) Input Gear Part No. 5-P-581

January 2008

Parker Hannifin Corporation
Chelsea Products Division
Olive Branch, MS 38654 USA

1052-A
1054-A
1352-A
PS130-5A

BOTTOM SIDE ONLY

TRANSMISSION GEAR DATA:
BOT 8-Bolt Opening Gear FORWARD of Centerline
43 Teeth - SPUR

PITCH LINE TO APERTURE FACE:
1.4830" (37.6700MM)

RIGHT SIDE ONLY

TRANSMISSION GEAR DATA:
R.H. 6-Bolt Opening Gear FORWARD of Centerline
43 Teeth - SPUR

PITCH LINE TO APERTURE FACE:
1.6380" (41.6100MM)

Caution: Application Approval Required for P.T.O. Output Shaft Speeds Above 2500 R.P.M.

BOTTOM Side P.T.O. Model	Inter. Torq.	Dir. Rot.	Engine % Hi	Engine % Rev	Filler Block	Adapter Assy.	Stud Kit	RIGHT Side P.T.O. Model	Inter. Torq.	Dir. Rot.	Engine % Hi	Engine % Rev	Filler Block	Adapter Assy.	Stud Kit
ONE SPEED - SINGLE GEAR - MECHANICAL SHIFT															
								100XRAHX-*3 (1)	125	Opp	90		7-A-1468(T)	328530-1X	7170-31X
ONE SPEED - TWO GEAR - MECHANICAL SHIFT															
823ZBAHX-*3 (6)	500	Opp	38		8-A-248		328170-130X	221XCAHX-*3	250	Eng	40		7-A-032(P)(2) 7-A-1468(T)	328530-1X	328170-36X
823ZJAHX-*3 (7)	500	Opp	57		8-A-248		328170-130X	221XEAHX-*3	250	Eng	46		7-A-1468(T)	328530-1X	328170-36X
823ZMAHX-*3 (8)	500	Opp	67		8-A-248		328170-130X	221XLAHX-*3	200	Eng	62		7-A-1468(T)	328530-1X	328170-36X
880ZBAHX-*3 (9)	500	Opp	38		8-A-248		328170-130X	221XPAHX-*3	200	Eng	75		7-A-1468(T)	328530-1X	328170-36X
880ZDAHX-*3 (10)	500	Opp	45		8-A-248		328170-130X	442KFAHX-*3 (3)	250	Eng	55		7-A-1468(T)	328530-1X	7170-28X
880ZGAHX-*3 (11)	500	Opp	49		8-A-248		328170-130X	442KHAHX-*3 (4)	250	Eng	64		7-A-1468(T)	328530-1X	7170-28X
880ZJAHX-*3 (12)	500	Opp	57		8-A-248		328170-130X	442KLAHX-*3 (5)	250	Eng	72		7-A-1468(T)	328530-1X	7170-28X
880ZMAHX-*3 (13)	500	Opp	67		8-A-248		328170-130X	442KQAHX-*3 (5)	225	Eng	77		7-A-1468(T)	328530-1X	7170-28X
880ZQAHX-*3 (14)	450	Opp	79		8-A-248		328170-130X	442KRAHX-*3 (5)	225	Eng	90		7-A-1468(T)	328530-1X	7170-28X
880ZRAHX-*3 (15)	400	Opp	93		8-A-248		328170-130X	442KSAHX-*3 (5)	200	Eng	107		7-A-1468(T)	328530-1X	7170-28X
880ZTAHX-*3 (16)	350	Opp	119		8-A-248		328170-130X	442KUAHX-*3 (5)	195	Eng	127		7-A-1468(T)	328530-1X	7170-28X
								442KWAHX-*3 (5)	175	Eng	149		7-A-1468(T)	328530-1X	7170-28X
								442KXAHX-*3 (5)	140	Eng	177		7-A-1468(T)	328530-1X	7170-28X
ONE SPEED - TWO GEAR - POWERSHIFT (AIR)															
885ZBAHX-*3 (9)	500	Opp	38		8-A-248		328170-130X	236KDAHX-*3 (5)	250	Eng	58		7-A-1468(T)	328530-1X	7170-28X
885ZGAHX-*3 (11)	500	Opp	49		8-A-248		328170-130X	236KKAHX-*3 (5)	250	Eng	75		7-A-1468(T)	328530-1X	7170-28X
885ZJAHX-*3 (12)	500	Opp	57		8-A-248		328170-130X	236KQAHX-*3 (5)	250	Eng	100		7-A-1468(T)	328530-1X	7170-28X
885ZMAHX-*3 (13)	500	Opp	67		8-A-248		328170-130X	236KUAHX-*3 (5)	225	Eng	115		7-A-1468(T)	328530-1X	7170-28X
ONE SPEED - FORWARD & REVERSE															
								340XFAHX-*5 (17)	200	Eng	48	51	7-A-140(P)(2) 7-A-1468(T)	328530-1X	7170-28X
								352XSAHX-*3 (5)	140	Eng	108	140	7-A-1468(T)	328530-1X	7170-28X
ONE SPEED - DUAL SHAFT															
								452XSAHX-*3 (5)	140	Eng	108		7-A-1468(T)	328530-1X	7170-28X

NOTE: No adapters are available for the 8-bolt opening.

(1) Gear and Shaft Kit No. KXA-2-P-565
(2) Filler block furnished with P.T.O.
(3) Input Gear Part No. 5-P-1077
(4) Input Gear Part No. 5-P-1364
(5) Input Gear Part No. 5-P-1004
(6) Input Gear Part No. 5-P-285
(7) Input Gear Part No. 5-P-325
(8) Input Gear Part No. 5-P-283
(9) Input Gear Part No. 5-P-1100
(10) Input Gear Part No. 5-P-1101
(11) Input Gear Part No. 5-P-1135
(12) Input Gear Part No. 5-P-1102
(13) Input Gear Part No. 5-P-1103
(14) Input Gear Part No. 5-P-1385
(15) Input Gear Part No. 5-P-1104
(16) Input Gear Part No. 5-P-1105
(17) Input Gear Part No. 5-P-581

January 2008

Parker Hannifin Corporation
Chelsea Products Division
Olive Branch, MS 38654 USA

1107-2A

BOTTOM SIDE ONLY

TRANSMISSION GEAR DATA:
BOT 8-Bolt Opening Gear FORWARD of Centerline
51 Teeth - SPUR
PITCH LINE TO APERTURE FACE:
.8170" (20.7518MM)

RIGHT SIDE ONLY

TRANSMISSION GEAR DATA:
R.H. 6-Bolt Opening Gear FORWARD of Centerline
51 Teeth - SPUR
PITCH LINE TO APERTURE FACE:
.9760" (24.7904MM)

Caution: Application Approval Required for P.T.O. Output Shaft Speeds Above 2500 R.P.M.

BOTTOM Side P.T.O. Model	Inter. Torq.	Dir. Rot.	Engine % Hi	Engine % Rev	Filler Block	Adapter Assy.	Stud Kit	RIGHT Side P.T.O. Model	Inter. Torq.	Dir. Rot.	Engine % Hi	Engine % Rev	Filler Block	Adapter Assy.	Stud Kit
ONE SPEED - SINGLE GEAR - MECHANICAL SHIFT															
100XRAHX-*3 (1)	125	Eng	89		7-A-125(P)	328481X	Furnished								
812XKAHX-*3	400	Eng	60				Furnished								
ONE SPEED - TWO GEAR - MECHANICAL SHIFT															
221ZCAHX-*3	250	Opp	40		7-A-032(P)(2)	328564X	Furnished	221XCAHX-*3	250	Opp	40		7-A-140 7-A-032 (2)	328170-102X	
221ZEAHX-*3	250	Opp	46			328564X	Furnished	221XEAHX-*3	250	Opp	46		7-A-093	Furnished	
221ZLAHX-*3	200	Opp	62			328564X	Furnished	221XLAHX-*3	200	Opp	62		7-A-093	Furnished	
221ZPAHX-*3	200	Opp	75			328564X	Furnished	221XPAHX-*3	200	Opp	75		7-A-093	Furnished	
442ZAAHX-*3 (3)	250	Opp	35			328564X	Furnished	442KAAHX-*3 (3)	250	Opp	35		7-A-093	7170-3X	
442ZCAHX-*3 (4)	250	Opp	45			328564X	Furnished	442KCAHX-*3 (4)	250	Opp	45		7-A-093	7170-3X	
442ZFAHX-*3 (5)	250	Opp	55			328564X	Furnished	442KFAHX-*3 (5)	250	Opp	55		7-A-093	7170-3X	
442ZHAHX-*3 (6)	250	Opp	64			328564X	Furnished	442KHAHX-*3 (6)	250	Opp	64		7-A-093	7170-3X	
442ZLAHX-*3 (7)	250	Opp	72			328564X	Furnished	442KLAHX-*3 (7)	250	Opp	72		7-A-093	7170-3X	
442ZQAHX-*3 (7)	225	Opp	77			328564X	Furnished	442KQAHX-*3 (7)	225	Opp	77		7-A-093	7170-3X	
442ZRAHX-*3 (7)	225	Opp	89			328564X	Furnished	442KRAHX-*3 (7)	225	Opp	89		7-A-093	7170-3X	
442ZSAHX-*3 (7)	200	Opp	106			328564X	Furnished	442KSAHX-*3 (7)	200	Opp	106		7-A-093	7170-3X	
442ZUAHX-*3 (7)	195	Opp	127			328564X	Furnished	442KUAHX-*3 (7)	195	Opp	127		7-A-093	7170-3X	
442ZWAHX-*3 (7)	175	Opp	149			328564X	Furnished	442KWAHX-*3 (7)	175	Opp	149		7-A-093	7170-3X	
442ZXAHX-*3 (7)	140	Opp	177			328564X	Furnished	442KXAHX-*3 (7)	140	Opp	177		7-A-093	7170-3X	
489XAAHX-*3 (3)	250	Opp	35				Furnished	660KFAHX-*3 (8)	375	Opp	55		7-A-093	7170-3X	
489XCAHX-*3 (4)	250	Opp	45				Furnished	660KQAHX-*3 (9)	375	Opp	77		7-A-093	7170-3X	
489XFAHX-*3 (5)	250	Opp	55				Furnished	660KSAHX-*3 (10)	325	Opp	106		7-A-093	7170-3X	
489XHAHX-*3 (6)	250	Opp	64				Furnished								
489XLAHX-*3 (7)	250	Opp	72				Furnished								
489XQAHX-*3 (7)	225	Opp	77				Furnished								
489XRAHX-*3 (7)	225	Opp	89				Furnished								
489XSAHX-*3 (7)	200	Opp	106				Furnished								
489XUAHX-*3 (7)	195	Opp	127				Furnished								
489XWAHX-*3 (7)	175	Opp	149				Furnished								
489XXAHX-*3 (7)	140	Opp	177				Furnished								
680XFAHX-*3 (8)	375	Opp	55				Furnished								
680XQAHX-*3 (9)	375	Opp	77				Furnished								

Continued Next Page

CAUTION: 660/680 Series: Applications above 1500 RPM output shaft speed, contact Chelsea Technical Service for approval.

NOTE: The AK & XK output flanges can not be used with the "A" & "C" ratios on the 489 Series P.T.O.s due to mounting stud interference. Use a RA or RB rotatable flange for the XK and the RA for the AK flange.

NOTE: If Ordering the 230/231 Series with the Shaft Brake Option, order the "BA" Output for Automatic Transmissions and the "BD" Output for Manual Transmissions.

(1) Gear and Shaft Kit No. KXA-2-P-565
(2) Filler block furnished with P.T.O.
(3) Input Gear Part No. 5-P-1280
(4) Input Gear Part No. 5-P-1287
(5) Input Gear Part No. 5-P-1077
(6) Input Gear Part No. 5-P-1364
(7) Input Gear Part No. 5-P-1004
(8) Input Gear Part No. 5-P-1242
(9) Input Gear Part No. 5-P-1246
(10) Input Gear Part No. 5-P-1322

Parker Hannifin Corporation
Chelsea Products Division
Olive Branch, MS 38654 USA

1107-2A

BOTTOM SIDE ONLY	RIGHT SIDE ONLY
TRANSMISSION GEAR DATA: BOT 8-Bolt Opening Gear FORWARD of Centerline 51 Teeth - SPUR **PITCH LINE TO APERTURE FACE:** .8170" (20.7518MM)	**TRANSMISSION GEAR DATA:** R.H. 6-Bolt Opening Gear FORWARD of Centerline 51 Teeth - SPUR **PITCH LINE TO APERTURE FACE:** .9760" (24.7904MM)

Caution: Application Approval Required for P.T.O. Output Shaft Speeds Above 2500 R.P.M.

BOTTOM Side P.T.O. Model	Inter. Torq.	Dir. Rot.	Engine % Hi	Engine % Rev	Filler Block	Adapter Assy.	Stud Kit	RIGHT Side P.T.O. Model	Inter. Torq.	Dir. Rot.	Engine % Hi	Engine % Rev	Filler Block	Adapter Assy.	Stud Kit
ONE SPEED - TWO GEAR - MECHANICAL SHIFT															
680XSAHX-*3 (10)	325	Opp	106				Furnished								
823XBAHX-*3 (11)	500	Opp	38				Furnished								
823XJAHX-*3 (12)	500	Opp	57				Furnished								
823XMAHX-*3 (13)	500	Opp	67				Furnished								
823XRAHX-*3 (14)	400	Opp	93				Furnished								
823XTKTX-*3 (15)	350	Opp	111		8-A-165(P)(2)		Furnished								
880XBAHX-*3 (16)	500	Opp	38				Furnished								
880XDAHX-*3 (17)	500	Opp	45				Furnished								
880XGAHX-*3 (18)	500	Opp	49				Furnished								
880XJAHX-*3 (19)	500	Opp	57				Furnished								
880XMAHX-*3 (20)	500	Opp	67				Furnished								
880XQAHX-*3 (21)	450	Opp	79				Furnished								
880XRAHX-*3 (22)	400	Opp	93				Furnished								
880XTAHX-*3 (23)	350	Opp	119				Furnished								
ONE SPEED - TWO GEAR - POWERSHIFT (AIR)															
230XAAJX-*3	250	Opp	29		7-A-032(P)	328481X	Furnished	230XAAJX-*3	250	Opp	29		7-A-125		328170-173X
230XBAJX-*3	250	Opp	38		7-A-032(P)	328481X	Furnished	230XBAJX-*3	250	Opp	38		7-A-125		328170-173X
230XDAJX-*3	250	Opp	44		7-A-032(P)	328481X	Furnished	230XDAJX-*3	250	Opp	44		7-A-125		328170-173X
230XKAJX-*3	250	Opp	59		7-A-032(P)	328481X	Furnished	230XKAJX-*3	250	Opp	59		7-A-125		328170-173X
230XQAJX-*3	250	Opp	79		7-A-032(P)	328481X	Furnished	230XQAJX-*3	250	Opp	79		7-A-125		328170-173X
230XUAJX-*3	225	Opp	126		7-A-032(P)	328481X	Furnished	230XUAJX-*3	225	Opp	126		7-A-125		328170-173X
236ZDAHX-*3 (7)	250	Opp	58			328564X	Furnished	236KDAHX-*3 (7)	250	Opp	58		7-A-093		7170-3X
236ZKAHX-*3 (7)	250	Opp	74			328564X	Furnished	236KKAHX-*3 (7)	250	Opp	74		7-A-093		7170-3X
236ZQAHX-*3 (7)	250	Opp	100			328564X	Furnished	236KQAHX-*3 (7)	250	Opp	100		7-A-093		7170-3X
236ZUAHX-*3 (7)	225	Opp	115			328564X	Furnished	236KUAHX-*3 (7)	225	Opp	115		7-A-093		7170-3X
885XBAHX-*3 (16)	500	Opp	38				Furnished								
885XGAHX-*3 (18)	500	Opp	49				Furnished								
885XJAHX-*3 (19)	500	Opp	57				Furnished								
885XMAHX-*3 (20)	500	Opp	67				Furnished								

Continued Next Page

CAUTION: 660/680 Series: Applications above 1500 RPM output shaft speed, contact Chelsea Technical Service for approval.

NOTE: The AK & XK output flanges can not be used with the "A" & "C" ratios on the 489 Series P.T.O.s due to mounting stud interference. Use a RA or RB rotatable flange for the XK and the RA for the AK flange.

NOTE: If Ordering the 230/231 Series with the Shaft Brake Option, order the "BA" Output for Automatic Transmissions and the "BD" Output for Manual Transmissions.

(2) Filler block furnished with P.T.O.
(7) Input Gear Part No. 5-P-1004
(10) Input Gear Part No. 5-P-1322
(11) Input Gear Part No. 5-P-285
(12) Input Gear Part No. 5-P-325
(13) Input Gear Part No. 5-P-283
(14) Input Gear Part No. 5-P-721
(15) Input Gear Part No. 5-P-1395
(16) Input Gear Part No. 5-P-1100
(17) Input Gear Part No. 5-P-1101
(18) Input Gear Part No. 5-P-1135
(19) Input Gear Part No. 5-P-1102
(20) Input Gear Part No. 5-P-1103
(21) Input Gear Part No. 5-P-1385
(22) Input Gear Part No. 5-P-1104
(23) Input Gear Part No. 5-P-1105

1107-2A

BOTTOM SIDE ONLY

TRANSMISSION GEAR DATA:
BOT 8-Bolt Opening Gear FORWARD of Centerline
51 Teeth - SPUR
PITCH LINE TO APERTURE FACE:
.8170" (20.7518MM)

RIGHT SIDE ONLY

TRANSMISSION GEAR DATA:
R.H. 6-Bolt Opening Gear FORWARD of Centerline
51 Teeth - SPUR
PITCH LINE TO APERTURE FACE:
.9760" (24.7904MM)

Caution: Application Approval Required for P.T.O. Output Shaft Speeds Above 2500 R.P.M.

BOTTOM Side P.T.O. Model	Inter. Torq.	Dir. Rot.	Engine % Hi	Engine % Rev	Filler Block	Adapter Assy.	Stud Kit	RIGHT Side P.T.O. Model	Inter. Torq.	Dir. Rot.	Engine % Hi	Engine % Rev	Filler Block	Adapter Assy.	Stud Kit
ONE SPEED - FORWARD & REVERSE															
340SFAHX-*5 (24)	200	Opp	48	51	7-A-140(T)(2) 7-A-062(P)	310778X	Furnished	340XFAHX-*5 (24)	200	Opp	48	51	7-A-140 (2) 7-A-240		Furnished
352ZSAHX-*3 (7)	140	Opp	108	140		328564X	Furnished	352XSAHX-*3 (7)	140	Opp	108	140	7-A-093		7170-3X
863XBAHX-*5	500	Opp	38	47			Furnished								
ONE SPEED - DUAL SHAFT															
452ZSAHX-*3 (7)	140	Opp	108			328564X	Furnished	452XSAHX-*3 (7)	140	Opp	108		7-A-093		7170-3X
GEARED ADAPTERS															
628XAHX-3AH					8-A-032		Furnished	626KAHX-3AH					7-A-093		7170-3X
								630KAHX-3AH					7-A-093		7170-3X
								645KAHX-3AH					7-A-093		7170-3X

CAUTION: 660/680 Series: Applications above 1500 RPM output shaft speed, contact Chelsea Technical Service for approval.

NOTE: The AK & XK output flanges can not be used with the "A" & "C" ratios on the 489 Series P.T.O.s due to mounting stud interference. Use a RA or RB rotatable flange for the XK and the RA for the AK flange.

NOTE: If Ordering the 230/231 Series with the Shaft Brake Option, order the "BA" Output for Automatic Transmissions and the "BD" Output for Manual Transmissions.

(2) Filler block furnished with P.T.O.
(7) Input Gear Part No. 5-P-1004
(24) Input Gear Part No. 5-P-581

Parker Hannifin Corporation
Chelsea Products Division
Olive Branch, MS 38654 USA

1107-2A	PS145-7A
1372-A	
1374-A	
PS110-7A	
PS140-7A	

BOTTOM SIDE ONLY

TRANSMISSION GEAR DATA:
BOT 6-Bolt Opening Gear FORWARD of Centerline
43 Teeth - SPUR

PITCH LINE TO APERTURE FACE:
.9900" (25.1500MM)

RIGHT SIDE ONLY

TRANSMISSION GEAR DATA:
R.H. 6-Bolt Opening Gear FORWARD of Centerline
43 Teeth - SPUR

PITCH LINE TO APERTURE FACE:
.9900" (25.1500MM)

Caution: Application Approval Required for P.T.O. Output Shaft Speeds Above 2500 R.P.M.

BOTTOM Side P.T.O. Model	Inter. Torq.	Dir. Rot.	Engine % Hi	Engine % Rev	Filler Block	Adapter Assy.	Stud Kit	RIGHT Side P.T.O. Model	Inter. Torq.	Dir. Rot.	Engine % Hi	Engine % Rev	Filler Block	Adapter Assy.	Stud Kit
ONE SPEED - SINGLE GEAR - MECHANICAL SHIFT															
100XRABX-*3 (1)	125	Eng	90				Furnished	100XRABX-*3 (1)	125	Opp	90		7-A-2000(T)	328530-2X	7170-50X
ONE SPEED - TWO GEAR - MECHANICAL SHIFT															
221XCABX-*3	250	Opp	42				Furnished	221XCABX-*3	250	Opp	42				Furnished
221XEABX-*3	250	Opp	46				Furnished	221XEABX-*3	250	Opp	46				Furnished
221XLABX-*3	200	Opp	62				Furnished	221XLABX-*3	200	Opp	62				Furnished
221XPABX-*3	200	Opp	75				Furnished	221XPABX-*3	200	Opp	75				Furnished
442XAABX-*3 (2)	250	Opp	34				Furnished	442XAABX-*3 (2)	250	Opp	34				Furnished
442XCABX-*3 (3)	250	Opp	44				Furnished	442XCABX-*3 (3)	250	Opp	44				Furnished
442XFABX-*3 (4)	250	Opp	54				Furnished	442XFABX-*3 (4)	250	Opp	54				Furnished
442XLABX-*3 (5)	250	Opp	70				Furnished	442XLABX-*3 (5)	250	Opp	70				Furnished
442XQABX-*3 (5)	225	Opp	75				Furnished	442XQABX-*3 (5)	225	Opp	75				Furnished
442XRABX-*3 (5)	225	Opp	87				Furnished	442XRABX-*3 (5)	225	Opp	87				Furnished
442XSABX-*3 (5)	200	Opp	104				Furnished	442XSABX-*3 (5)	200	Opp	104				Furnished
442XUABX-*3 (5)	195	Opp	124				Furnished	442XUABX-*3 (5)	195	Opp	124				Furnished
442XWABX-*3 (5)	175	Opp	145				Furnished	442XWABX-*3 (5)	175	Opp	145				Furnished
442XXABX-*3 (5)	140	Opp	172				Furnished	442XXABX-*3 (5)	140	Opp	172				Furnished
ONE SPEED - TWO GEAR - POWERSHIFT (AIR)															
236XDABX-*3 (5)	250	Opp	57				Furnished	236XDABX-*3 (5)	250	Opp	57				Furnished
236XKABX-*3 (5)	250	Opp	72				Furnished	236XKABX-*3 (5)	250	Opp	72				Furnished
236XQABX-*3 (5)	250	Opp	97				Furnished	236XQABX-*3 (5)	250	Opp	97				Furnished
236XUABX-*3 (5)	225	Opp	112				Furnished	236XUABX-*3 (5)	225	Opp	112				Furnished
ONE SPEED - FORWARD & REVERSE															
340XFABX-*5 (6)	200	Opp	49	52	7-A-140 (7)		Furnished	340XFABX-*5 (6)	200	Opp	49	52	7-A-140 (7)		Furnished
352XSABX-*3 (5)	140	Opp	105	136			Furnished	352XSABX-*3 (5)	140	Opp	105	136			Furnished
ONE SPEED - DUAL SHAFT															
452XSABX-*3 (5)	140	Opp	105				Furnished	452XSABX-*3 (5)	140	Opp	105				Furnished
GEARED ADAPTERS															
626XABX-3AB							Furnished	626XABX-3AB							Furnished
630XABX-3AB							Furnished	630XABX-3AB							Furnished
645XABX-3AB							Furnished	645XABX-3AB							Furnished

(1) Gear and Shaft Kit No. KXA-2-P-563
(2) Input Gear Part No. 5-P-1279
(3) Input Gear Part No. 5-P-1286
(4) Input Gear Part No. 5-P-1076
(5) Input Gear Part No. 5-P-1001
(6) Input Gear Part No. 5-P-579
(7) Filler block furnished with P.T.O.

1310-2A
1310-4A
PS130-10A
PS130-12A
PS85-14-4L

BOTTOM SIDE ONLY

TRANSMISSION GEAR DATA:
BOT 8-Bolt Opening Gear FORWARD of Centerline
51 Teeth - SPUR
PITCH LINE TO APERTURE FACE:
.7070" (17.9600MM)

RIGHT SIDE ONLY

TRANSMISSION GEAR DATA:
R.H. 6-Bolt Opening Gear FORWARD of Centerline
51 Teeth - SPUR
PITCH LINE TO APERTURE FACE:
.8630" (21.9200MM)

Caution: Application Approval Required for P.T.O. Output Shaft Speeds Above 2500 R.P.M.

BOTTOM Side P.T.O. Model	Inter. Torq.	Dir. Rot.	Engine % Hi	Engine % Rev	Filler Block	Adapter Assy.	Stud Kit	RIGHT Side P.T.O. Model	Inter. Torq.	Dir. Rot.	Engine % Hi	Engine % Rev	Filler Block	Adapter Assy.	Stud Kit
ONE SPEED - SINGLE GEAR - MECHANICAL SHIFT															
100XRAHX-*3 (1)	125	Eng	90		7-A-062(P)	328481X	7170-10X	100XRAHX-*3 (1)	125	Eng	90		7-A-200		7170-11X
812XKAHX-*3	400	Eng	60		8-A-062		Furnished								
ONE SPEED - TWO GEAR - MECHANICAL SHIFT															
221XCAHX-*3	250	Opp	40		7-A-032 (2)	310778X	Furnished	221XCAHX-*3	250	Opp	40		7-A-240 7-A-032 (2)		328170-102X
221XEAHX-*3	250	Opp	46		7-A-062(P)	328481X	Furnished	221XEAHX-*3	250	Opp	46		7-A-187		328170-93X
221XLAHX-*3	200	Opp	62		7-A-062(P)	328481X	Furnished	221XLAHX-*3	200	Opp	62		7-A-187		328170-93X
221XPAHX-*3	200	Opp	75		7-A-062(P)	328481X	Furnished	221XPAHX-*3	200	Opp	75		7-A-187		328170-93X
442XAAHX-*3 (3)	250	Opp	35		7-A-062(P)	328481X	Furnished	442KAAHX-*3 (3)	250	Opp	35		7-A-187		7170-3X
442XCAHX-*3 (4)	250	Opp	45		7-A-062(P)	328481X	Furnished	442KCAHX-*3 (4)	250	Opp	45		7-A-187		7170-3X
442XFAHX-*3 (5)	250	Opp	56		7-A-062(P)	328481X	Furnished	442KFAHX-*3 (5)	250	Opp	56		7-A-187		7170-3X
442XHAHX-*3 (6)	250	Opp	65		7-A-062(P)	328481X	Furnished	442KHAHX-*3 (6)	250	Opp	65		7-A-187		7170-3X
442XLAHX-*3 (7)	250	Opp	72		7-A-062(P)	328481X	Furnished	442KLAHX-*3 (7)	250	Opp	72		7-A-187		7170-3X
442XQAHX-*3 (7)	225	Opp	78		7-A-062(P)	328481X	Furnished	442KQAHX-*3 (7)	225	Opp	78		7-A-187		7170-3X
442XRAHX-*3 (7)	225	Opp	90		7-A-062(P)	328481X	Furnished	442KRAHX-*3 (7)	225	Opp	90		7-A-187		7170-3X
442XSAHX-*3 (7)	200	Opp	107		7-A-062(P)	328481X	Furnished	442KSAHX-*3 (7)	200	Opp	107		7-A-187		7170-3X
442XUAHX-*3 (7)	195	Opp	128		7-A-062(P)	328481X	Furnished	442KUAHX-*3 (7)	195	Opp	128		7-A-187		7170-3X
442XWAHX-*3 (7)	175	Opp	151		7-A-062(P)	328481X	Furnished	442KWAHX-*3 (7)	175	Opp	151		7-A-187		7170-3X
442XXAHX-*3 (7)	140	Opp	178		7-A-062(P)	328481X	Furnished	442KXAHX-*3 (7)	140	Opp	178		7-A-187		7170-3X
489XAAHX-*3 (3)	250	Opp	35		8-A-062		328170-190X	660KFAHX-*3 (8)	375	Opp	56		7-A-187		7170-3X
489XCAHX-*3 (4)	250	Opp	45		8-A-062		328170-190X	660KQAHX-*3 (9)	375	Opp	78		7-A-187		7170-3X
489XFAHX-*3 (5)	250	Opp	56		8-A-062		328170-190X	660KSAHX-*3 (10)	325	Opp	107		7-A-187		7170-3X
489XHAHX-*3 (6)	250	Opp	65		8-A-062		328170-190X								
489XLAHX-*3 (7)	250	Opp	72		8-A-062		328170-190X								
489XQAHX-*3 (7)	225	Opp	78		8-A-062		328170-190X								
489XRAHX-*3 (7)	225	Opp	90		8-A-062		328170-190X								
489XSAHX-*3 (7)	200	Opp	107		8-A-062		328170-190X								
489XUAHX-*3 (7)	195	Opp	128		8-A-062		328170-190X								
489XWAHX-*3 (7)	175	Opp	151		8-A-062		328170-190X								
489XXAHX-*3 (7)	140	Opp	178		8-A-062		328170-190X								
680XFAHX-*3 (8)	375	Opp	56		8-A-062		328170-190X								
680XQAHX-*3 (9)	375	Opp	78		8-A-062		328170-190X								
680XSAHX-*3 (10)	325	Opp	107		8-A-062		328170-190X								
823XBAHX-*3 (11)	500	Opp	38		8-A-062		328170-15X								

Continued Next Page

CAUTION: Do not use geared adapters with 442 "A" and "C" ratios.

CAUTION: 660/680 Series: Applications above 1500 RPM output shaft speed, contact Chelsea Technical Service for approval.

NOTE: All speeds shown with low speed head set gear ratio based on 20:47 tooth count; for speeds with high speed head set ratio (28:51 tooth count), multiply speeds shown by 1.29.

NOTE: The AK & XK output flanges can not be used with the "A" & "C" ratios on the 489 Series P.T.O.s due to mounting stud interference. Use a RA or RB rotatable flange for the XK and the RA for the AK flange.

NOTE: If Ordering the 230/231 Series with the Shaft Brake Option, order the "BA" Output for Automatic Transmissions and the "BD" Output for Manual Transmissions.

(1) Gear and Shaft Kit No. KXA-2-P-565
(2) Filler block furnished with P.T.O. but not required
(3) Input Gear Part No. 5-P-1280
(4) Input Gear Part No. 5-P-1287
(5) Input Gear Part No. 5-P-1077
(6) Input Gear Part No. 5-P-1364
(7) Input Gear Part No. 5-P-1004
(8) Input Gear Part No. 5-P-1242
(9) Input Gear Part No. 5-P-1246
(10) Input Gear Part No. 5-P-1322
(11) Input Gear Part No. 5-P-285

January 2008

Parker Chelsea
Parker Hannifin Corporation
Chelsea Products Division
Olive Branch, MS 38654 USA

1310-2A
1310-4A
PS130-10A
PS130-12A
PS85-14-4L

BOTTOM SIDE ONLY

TRANSMISSION GEAR DATA:
BOT 8-Bolt Opening Gear FORWARD of Centerline
51 Teeth - SPUR

PITCH LINE TO APERTURE FACE:
.7070" (17.9600MM)

RIGHT SIDE ONLY

TRANSMISSION GEAR DATA:
R.H. 6-Bolt Opening Gear FORWARD of Centerline
51 Teeth - SPUR

PITCH LINE TO APERTURE FACE:
.8630" (21.9200MM)

Caution: Application Approval Required for P.T.O. Output Shaft Speeds Above 2500 R.P.M.

BOTTOM Side P.T.O. Model	Inter. Torq.	Dir. Rot.	Engine % Hi	Engine % Rev	Filler Block	Adapter Assy.	Stud Kit	RIGHT Side P.T.O. Model	Inter. Torq.	Dir. Rot.	Engine % Hi	Engine % Rev	Filler Block	Adapter Assy.	Stud Kit
ONE SPEED - TWO GEAR - MECHANICAL SHIFT															
823XJAHX-*3 (12)	500	Opp	58		8-A-062		328170-15X								
823XMAHX-*3 (13)	500	Opp	68		8-A-062		328170-15X								
823XRAHX-*3 (14)	400	Opp	94		8-A-062		328170-15X								
880XBAHX-*3 (15)	500	Opp	38		8-A-062		328170-15X								
880XDAHX-*3 (16)	500	Opp	45		8-A-062		328170-15X								
880XGAHX-*3 (17)	500	Opp	49		8-A-062		328170-15X								
880XJAHX-*3 (18)	500	Opp	58		8-A-062		328170-15X								
880XMAHX-*3 (19)	500	Opp	68		8-A-062		328170-15X								
880XQAHX-*3 (20)	450	Opp	80		8-A-062		328170-15X								
880XRAHX-*3 (21)	400	Opp	94		8-A-062		328170-15X								
880XTAHX-*3 (22)	350	Opp	120		8-A-062		328170-15X								
ONE SPEED - TWO GEAR - POWERSHIFT (AIR)															
230XAAJX-*3	250	Opp	29		7-A-093(P)	328481X	328170-173X	230XAAJX-*3	250	Opp	29		7-A-187		328170-175X
230XBAJX-*3	250	Opp	38		7-A-093(P)	328481X	328170-173X	230XBAJX-*3	250	Opp	38		7-A-187		328170-175X
230XDAJX-*3	250	Opp	44		7-A-093(P)	328481X	328170-173X	230XDAJX-*3	250	Opp	44		7-A-187		328170-175X
230XKAJX-*3	250	Opp	60		7-A-093(P)	328481X	328170-173X	230XKAJX-*3	250	Opp	60		7-A-187		328170-175X
230XQAJX-*3	250	Opp	80		7-A-093(P)	328481X	328170-173X	230XQAJX-*3	250	Opp	80		7-A-187		328170-175X
230XUAJX-*3	225	Opp	127		7-A-093(P)	328481X	328170-173X	230XUAJX-*3	225	Opp	127		7-A-187		328170-175X
236XDAHX-*3 (7)	250	Opp	58		7-A-062(P)	328481X	Furnished	236KDAHX-*3 (7)	250	Opp	58		7-A-187		7170-3X
236XKAHX-*3 (7)	250	Opp	75		7-A-062(P)	328481X	Furnished	236KKAHX-*3 (7)	250	Opp	75		7-A-187		7170-3X
236XQAHX-*3 (7)	250	Opp	101		7-A-062(P)	328481X	Furnished	236KQAHX-*3 (7)	250	Opp	101		7-A-187		7170-3X
236XUAHX-*3 (7)	225	Opp	116		7-A-062(P)	328481X	Furnished	236KUAHX-*3 (7)	225	Opp	116		7-A-187		7170-3X
885XBAHX-*3 (15)	500	Opp	38		8-A-062		328170-15X								
885XGAHX-*3 (17)	500	Opp	49		8-A-062		328170-15X								
885XJAHX-*3 (18)	500	Opp	58		8-A-062		328170-15X								
885XMAHX-*3 (19)	500	Opp	68		8-A-062		328170-15X								
ONE SPEED - FORWARD & REVERSE															
352XSAHX-*3 (7)	140	Opp	109	141	7-A-062(P)	328481X	Furnished	352XSAHX-*3 (7)	140	Opp	109	141	7-A-187		7170-3X
ONE SPEED - DUAL SHAFT															
452XSAHX-*3 (7)	140	Opp	109		7-A-062(P)	328481X	Furnished	452XSAHX-*3 (7)	140	Opp	109		7-A-187		7170-3X

Continued Next Page

CAUTION: Do not use geared adapters with 442 "A" and "C" ratios.

CAUTION: 660/680 Series: Applications above 1500 RPM output shaft speed, contact Chelsea Technical Service for approval.

NOTE: All speeds shown with low speed head set gear ratio based on 20:47 tooth count; for speeds with high speed head set ratio (28:51 tooth count), multiply speeds shown by 1.29.

NOTE: The AK & XK output flanges can not be used with the "A" & "C" ratios on the 489 Series P.T.O.s due to mounting stud interference. Use a RA or RB rotatable flange for the XK and the RA for the AK flange.

NOTE: If Ordering the 230/231 Series with the Shaft Brake Option, order the "BA" Output for Automatic Transmissions and the "BD" Output for Manual Transmissions.

(7) Input Gear Part No. 5-P-1004
(12) Input Gear Part No. 5-P-325
(13) Input Gear Part No. 5-P-283
(14) Input Gear Part No. 5-P-721
(15) Input Gear Part No. 5-P-1100
(16) Input Gear Part No. 5-P-1101
(17) Input Gear Part No. 5-P-1135
(18) Input Gear Part No. 5-P-1102
(19) Input Gear Part No. 5-P-1103
(20) Input Gear Part No. 5-P-1385
(21) Input Gear Part No. 5-P-1104
(22) Input Gear Part No. 5-P-1105

January 2008

Parker Hannifin Corporation
Chelsea Products Division
Olive Branch, MS 38654 USA

1310-2A
1310-4A
PS130-10A
PS130-12A
PS85-14-4L

BOTTOM SIDE ONLY	RIGHT SIDE ONLY
TRANSMISSION GEAR DATA: BOT 8-Bolt Opening Gear FORWARD of Centerline 51 Teeth - SPUR **PITCH LINE TO APERTURE FACE:** .7070" (17.9600MM)	**TRANSMISSION GEAR DATA:** R.H. 6-Bolt Opening Gear FORWARD of Centerline 51 Teeth - SPUR **PITCH LINE TO APERTURE FACE:** .8630" (21.9200MM)

Caution: Application Approval Required for P.T.O. Output Shaft Speeds Above 2500 R.P.M.

GEARED ADAPTERS

BOTTOM Side P.T.O. Model	Inter. Torq.	Dir. Rot.	Engine % Hi	Engine % Rev	Filler Block	Adapter Assy.	Stud Kit	RIGHT Side P.T.O. Model	Inter. Torq.	Dir. Rot.	Engine % Hi	Engine % Rev	Filler Block	Adapter Assy.	Stud Kit
628XAHX-3AH					8-A-093		328170-190X	626KAHX-3AH					7-A-187		7170-3X
								630KAHX-3AH					7-A-187		7170-3X
								645KAHX-3AH					7-A-187		7170-3X

CAUTION: Do not use geared adapters with 442 "A" and "C" ratios.

CAUTION: 660/680 Series: Applications above 1500 RPM output shaft speed, contact Chelsea Technical Service for approval.

NOTE: All speeds shown with low speed head set gear ratio based on 20:47 tooth count; for speeds with high speed head set ratio (28:51 tooth count), multiply speeds shown by 1.29.

NOTE: The AK & XK output flanges can not be used with the "A" & "C" ratios on the 489 Series P.T.O.s due to mounting stud interference. Use a RA or RB rotatable flange for the XK and the RA for the AK flange.

NOTE: If Ordering the 230/231 Series with the Shaft Brake Option, order the "BA" Output for Automatic Transmissions and the "BD" Output for Manual Transmissions.

Parker Hannifin Corporation
Chelsea Products Division
Olive Branch, MS 38654 USA

1372-B
PS110-7B
PS125-7A
PS125-7B

BOTTOM SIDE ONLY

TRANSMISSION GEAR DATA:
BOT 6-Bolt Opening Gear FORWARD of Centerline
56 Teeth - SPUR

PITCH LINE TO APERTURE FACE:
.6680" (16.9700MM)

RIGHT SIDE ONLY

TRANSMISSION GEAR DATA:
R.H. 6-Bolt Opening Gear FORWARD of Centerline
56 Teeth - SPUR

PITCH LINE TO APERTURE FACE:
.6680" (16.9700MM)

Caution: Application Approval Required for P.T.O. Output Shaft Speeds Above 2500 R.P.M.

BOTTOM Side P.T.O. Model	Inter. Torq.	Dir. Rot.	Engine % Hi	Engine % Rev	Filler Block	Adapter Assy.	Stud Kit	RIGHT Side P.T.O. Model	Inter. Torq.	Dir. Rot.	Engine % Hi	Engine % Rev	Filler Block	Adapter Assy.	Stud Kit
ONE SPEED - SINGLE GEAR - MECHANICAL SHIFT															
100XRAHX-*3 (1)	125	Eng	81		7-A-300		7170-12X	100XRAHX-*3 (1)	125	Eng	81		7-A-300		7170-12X
ONE SPEED - TWO GEAR - MECHANICAL SHIFT															
221XEAHX-*3	250	Opp	42		7-A-300		328170-102X	221XEAHX-*3	250	Opp	42		7-A-300		328170-102X
221XLAHX-*3	200	Opp	56		7-A-300		328170-102X	221XLAHX-*3	200	Opp	56		7-A-300		328170-102X
221XPAHX-*3	200	Opp	68		7-A-300		328170-102X	221XPAHX-*3	200	Opp	68		7-A-300		328170-102X
442KAAHX-*3 (2)	250	Opp	32		7-A-300		7170-4X	442KAAHX-*3 (2)	250	Opp	32		7-A-300		7170-4X
442KCAHX-*3 (3)	250	Opp	41		7-A-300		7170-4X	442KCAHX-*3 (3)	250	Opp	41		7-A-300		7170-4X
442KFAHX-*3 (4)	250	Opp	50		7-A-300		7170-4X	442KFAHX-*3 (4)	250	Opp	50		7-A-300		7170-4X
442KHAHX-*3 (5)	250	Opp	58		7-A-300		7170-4X	442KHAHX-*3 (5)	250	Opp	58		7-A-300		7170-4X
442KLAHX-*3 (6)	250	Opp	65		7-A-300		7170-4X	442KLAHX-*3 (6)	250	Opp	65		7-A-300		7170-4X
442KQAHX-*3 (6)	225	Opp	70		7-A-300		7170-4X	442KQAHX-*3 (6)	225	Opp	70		7-A-300		7170-4X
442KRAHX-*3 (6)	225	Opp	81		7-A-300		7170-4X	442KRAHX-*3 (6)	225	Opp	81		7-A-300		7170-4X
442KSAHX-*3 (6)	200	Opp	97		7-A-300		7170-4X	442KSAHX-*3 (6)	200	Opp	97		7-A-300		7170-4X
442KUAHX-*3 (6)	195	Opp	115		7-A-300		7170-4X	442KUAHX-*3 (6)	195	Opp	115		7-A-300		7170-4X
442KWAHX-*3 (6)	175	Opp	135		7-A-300		7170-4X	442KWAHX-*3 (6)	175	Opp	135		7-A-300		7170-4X
442KXAHX-*3 (6)	140	Opp	160		7-A-300		7170-4X	442KXAHX-*3 (6)	140	Opp	160		7-A-300		7170-4X
660KFAHX-*3 (7)	375	Opp	50		7-A-300		7170-4X	660KFAHX-*3 (7)	375	Opp	50		7-A-300		7170-4X
660KQAHX-*3 (8)	375	Opp	70		7-A-300		7170-4X	660KQAHX-*3 (8)	375	Opp	70		7-A-300		7170-4X
660KSAHX-*3 (9)	325	Opp	97		7-A-300		7170-4X	660KSAHX-*3 (9)	325	Opp	97		7-A-300		7170-4X
ONE SPEED - TWO GEAR - POWERSHIFT (AIR)															
230XAAJX-*3	250	Opp	26		7-A-300		328170-174X	230XAAJX-*3	250	Opp	26		7-A-300		328170-174X
230XBAJX-*3	250	Opp	34		7-A-300		328170-174X	230XBAJX-*3	250	Opp	34		7-A-300		328170-174X
230XDAJX-*3	250	Opp	40		7-A-300		328170-174X	230XDAJX-*3	250	Opp	40		7-A-300		328170-174X
230XKAJX-*3	250	Opp	54		7-A-300		328170-174X	230XKAJX-*3	250	Opp	54		7-A-300		328170-174X
230XQAJX-*3	250	Opp	72		7-A-300		328170-174X	230XQAJX-*3	250	Opp	72		7-A-300		328170-174X
230XUAJX-*3	225	Opp	115		7-A-300		328170-174X	230XUAJX-*3	225	Opp	115		7-A-300		328170-174X
236KDAHX-*3 (6)	250	Opp	53		7-A-300		7170-4X	236KDAHX-*3 (6)	250	Opp	53		7-A-300		7170-4X
236KKAHX-*3 (6)	250	Opp	67		7-A-300		7170-4X	236KKAHX-*3 (6)	250	Opp	67		7-A-300		7170-4X
236KQAHX-*3 (6)	250	Opp	91		7-A-300		7170-4X	236KQAHX-*3 (6)	250	Opp	91		7-A-300		7170-4X
236KUAHX-*3 (6)	225	Opp	104		7-A-300		7170-4X	236KUAHX-*3 (6)	225	Opp	104		7-A-300		7170-4X
ONE SPEED - FORWARD & REVERSE															
352XSAHX-*3 (6)	140	Opp	98	127	7-A-300		7170-4X	352XSAHX-*3 (6)	140	Opp	98	127	7-A-300		7170-4X

Continued Next Page

CAUTION: Do not use geared adapters with 442 "A" and "C" ratios.

CAUTION: 660/680 Series: Applications above 1500 RPM output shaft speed, contact Chelsea Technical Service for approval.

NOTE: Chelsea P.T.O. Models 322 and 340 cannot be mounted on this transmission because transmission driver gear does not mesh completely with P.T.O. input gear.

NOTE: If Ordering the 230/231 Series with the Shaft Brake Option, order the "BA" Output for Automatic Transmissions and the "BD" Output for Manual Transmissions.

(1) Gear and Shaft Kit No. KXA-2-P-565
(2) Input Gear Part No. 5-P-1280
(3) Input Gear Part No. 5-P-1287
(4) Input Gear Part No. 5-P-1077
(5) Input Gear Part No. 5-P-1364
(6) Input Gear Part No. 5-P-1004
(7) Input Gear Part No. 5-P-1242
(8) Input Gear Part No. 5-P-1246
(9) Input Gear Part No. 5-P-1322

1372-B
PS110-7B
PS125-7A
PS125-7B

BOTTOM SIDE ONLY	RIGHT SIDE ONLY
TRANSMISSION GEAR DATA: BOT 6-Bolt Opening Gear FORWARD of Centerline 56 Teeth - SPUR **PITCH LINE TO APERTURE FACE:** .6680" (16.9700MM)	**TRANSMISSION GEAR DATA:** R.H. 6-Bolt Opening Gear FORWARD of Centerline 56 Teeth - SPUR **PITCH LINE TO APERTURE FACE:** .6680" (16.9700MM)

Caution: Application Approval Required for P.T.O. Output Shaft Speeds Above 2500 R.P.M.

BOTTOM Side P.T.O. Model	Inter. Torq.	Dir. Rot.	Engine % Hi	Engine % Rev	Filler Block	Adapter Assy.	Stud Kit	RIGHT Side P.T.O. Model	Inter. Torq.	Dir. Rot.	Engine % Hi	Engine % Rev	Filler Block	Adapter Assy.	Stud Kit
ONE SPEED - DUAL SHAFT															
452XSAHX-*3 (6)	140	Opp	98		7-A-300		7170-4X	452XSAHX-*3 (6)	140	Opp	98		7-A-300		7170-4X
GEARED ADAPTERS															
626KAHX-3AH					7-A-300		7170-4X	626KAHX-3AH					7-A-300		7170-4X
630KAHX-3AH					7-A-300		7170-4X	630KAHX-3AH					7-A-300		7170-4X
645KAHX-3AH					7-A-300		7170-4X	645KAHX-3AH					7-A-300		7170-4X

CAUTION: Do not use geared adapters with 442 "A" and "C" ratios.

CAUTION: 660/680 Series: Applications above 1500 RPM output shaft speed, contact Chelsea Technical Service for approval.

NOTE: Chelsea P.T.O. Models 322 and 340 cannot be mounted on this transmission because transmission driver gear does not mesh completely with P.T.O. input gear.

NOTE: If Ordering the 230/231 Series with the Shaft Brake Option, order the "BA" Output for Automatic Transmissions and the "BD" Output for Manual Transmissions.

(6) Input Gear Part No. 5-P-1004

Parker Hannifin Corporation
Chelsea Products Division
Olive Branch, MS 38654 USA

Model 23/24

LEFT SIDE ONLY

TRANSMISSION GEAR DATA:

L.H. 6-Bolt Opening Gear FORWARD of Centerline

36 Teeth - R.H. HELIX

PITCH LINE TO APERTURE FACE:

.7000" (17.7800MM)

Caution: Application Approval Required for P.T.O. Output Shaft Speeds Above 2500 R.P.M.

LEFT Side P.T.O. Model	Inter. Torq.	Dir. Rot.	Engine % Hi	Engine % Rev	Filler Block	Adapter Assy.	Stud Kit	P.T.O. Model	Inter. Torq.	Dir. Rot.	Engine % Hi	Engine % Rev	Filler Block	Adapter Assy.	Stud Kit
ONE SPEED - SINGLE GEAR - MECHANICAL SHIFT															
100PRCQX-*3 (1)	125	Eng	129				Furnished								

(1) Gear and Shaft Kit No. KXA-2-P-587

Parker Chelsea

Parker Hannifin Corporation
Chelsea Products Division
Olive Branch, MS 38654 USA

CM4052-A
CM4054-A
ES42-5A

LEFT SIDE ONLY	RIGHT SIDE ONLY
TRANSMISSION GEAR DATA: L.H. 6-Bolt Opening Gear FORWARD of Centerline 40 Teeth - R.H. HELIX **PITCH LINE TO APERTURE FACE:** 1.0000" (25.4000MM)	**TRANSMISSION GEAR DATA:** R.H. 6-Bolt Opening Gear FORWARD of Centerline 40 Teeth - R.H. HELIX **PITCH LINE TO APERTURE FACE:** 1.0000" (25.4000MM)

Caution: Application Approval Required for P.T.O. Output Shaft Speeds Above 2500 R.P.M.

LEFT Side P.T.O. Model	Inter. Torq.	Dir. Rot.	Engine % Hi	Engine % Rev	Filler Block	Adapter Assy.	Stud Kit	RIGHT Side P.T.O. Model	Inter. Torq.	Dir. Rot.	Engine % Hi	Engine % Rev	Filler Block	Adapter Assy.	Stud Kit
ONE SPEED - SINGLE GEAR - MECHANICAL SHIFT															
								100XRBQX-*3 (1)	125	Eng	73				Furnished
ONE SPEED - TWO GEAR - MECHANICAL SHIFT															
442XFBQX-*5 (2)	250	Opp	44				Furnished	442XFBQX-*3 (2)	250	Opp	44				Furnished
442XLBQX-*5 (3)	250	Opp	58				Furnished	442XLBQX-*3 (3)	250	Opp	58				Furnished
442XQBQX-*5 (3)	225	Opp	62				Furnished	442XQBQX-*3 (3)	225	Opp	62				Furnished
442XRBQX-*5 (3)	225	Opp	72				Furnished	442XRBQX-*3 (3)	225	Opp	72				Furnished
442XSBQX-*5 (3)	200	Opp	86				Furnished	442XSBQX-*3 (3)	200	Opp	86				Furnished
442XUBQX-*5 (3)	195	Opp	102				Furnished	442XUBQX-*3 (3)	195	Opp	102				Furnished
442XWBQX-*5 (3)	175	Opp	120				Furnished	442XWBQX-*3 (3)	175	Opp	120				Furnished
442XXBQX-*5 (3)	140	Opp	142				Furnished	442XXBQX-*3 (3)	140	Opp	142				Furnished
ONE SPEED - TWO GEAR - POWERSHIFT (AIR)															
236XDBQX-*5 (3)	250	Opp	47				Furnished	236XDBQX-*3 (3)	250	Opp	47				Furnished
236XKBQX-*5 (3)	250	Opp	60				Furnished	236XKBQX-*3 (3)	250	Opp	60				Furnished
236XQBQX-*5 (3)	250	Opp	81				Furnished	236XQBQX-*3 (3)	250	Opp	81				Furnished
236XUBQX-*5 (3)	225	Opp	92				Furnished	236XUBQX-*3 (3)	225	Opp	92				Furnished
ONE SPEED - FORWARD & REVERSE															
340XFBQX-*5 (4)	200	Opp	41	43	7-A-140 (5)		Furnished	340XFBQX-*5 (4)	200	Opp	41	43	7-A-140 (5)		Furnished
352XSBQX-*5 (3)	140	Opp	87	112			Furnished	352XSBQX-*3 (3)	140	Opp	87	112			Furnished
TWO SPEEDS - FORWARD & REVERSE															
321XNBQX-*5	140	Opp	122	83			Furnished	321XNBQX-*3	140	Opp	122	83			Furnished
ONE SPEED - DUAL SHAFT															
452XSBQX-*3 (3)	140	Opp	87				Furnished	452XSBQX-*3 (3)	140	Opp	87				Furnished
GEARED ADAPTERS															
626XBQX-4BP							Furnished	626XBQX-3BP							Furnished
630XBQX-4BP							Furnished	630XBQX-3BP							Furnished
645XBQX-4BP							Furnished	645XBQX-3BP							Furnished

NOTE: 100 Series will not mount on the left side due to output shaft interference.

(1) Gear and Shaft Kit No. KXA-2-P-578
(2) Input Gear Part No. 5-P-1084
(3) Input Gear Part No. 5-P-1023
(4) Input Gear Part No. 5-P-720
(5) Filler block furnished with P.T.O.

Parker Hannifin Corporation
Chelsea Products Division
Olive Branch, MS 38654 USA

CM4052-D
CM4054-D
ES42-5D

LEFT SIDE ONLY

TRANSMISSION GEAR DATA:
L.H. 6-Bolt Opening Gear FORWARD of Centerline
42 Teeth - R.H. HELIX

PITCH LINE TO APERTURE FACE:
.8500" (21.5900MM)

RIGHT SIDE ONLY

TRANSMISSION GEAR DATA:
R.H. 6-Bolt Opening Gear FORWARD of Centerline
42 Teeth - R.H. HELIX

PITCH LINE TO APERTURE FACE:
.8500" (21.5900MM)

Caution: Application Approval Required for P.T.O. Output Shaft Speeds Above 2500 R.P.M.

LEFT Side P.T.O. Model	Inter. Torq.	Dir. Rot.	Engine % Hi	Engine % Rev	Filler Block	Adapter Assy.	Stud Kit	RIGHT Side P.T.O. Model	Inter. Torq.	Dir. Rot.	Engine % Hi	Engine % Rev	Filler Block	Adapter Assy.	Stud Kit
ONE SPEED - SINGLE GEAR - MECHANICAL SHIFT															
								100XRBQX-*3 (1)	125	Eng	76		7-A-140		7170-11X
ONE SPEED - TWO GEAR - MECHANICAL SHIFT															
442KFBQX-*5 (2)	250	Opp	47		7-A-140		7170-3X	442KFBQX-*3 (2)	250	Opp	47		7-A-140		7170-3X
442KLBQX-*5 (3)	250	Opp	61		7-A-140		7170-3X	442KLBQX-*3 (3)	250	Opp	61		7-A-140		7170-3X
442KQBQX-*5 (3)	225	Opp	65		7-A-140		7170-3X	442KQBQX-*3 (3)	225	Opp	65		7-A-140		7170-3X
442KRBQX-*5 (3)	225	Opp	75		7-A-140		7170-3X	442KRBQX-*3 (3)	225	Opp	75		7-A-140		7170-3X
442KSBQX-*5 (3)	200	Opp	90		7-A-140		7170-3X	442KSBQX-*3 (3)	200	Opp	90		7-A-140		7170-3X
442KUBQX-*5 (3)	195	Opp	107		7-A-140		7170-3X	442KUBQX-*3 (3)	195	Opp	107		7-A-140		7170-3X
442KWBQX-*5 (3)	175	Opp	126		7-A-140		7170-3X	442KWBQX-*3 (3)	175	Opp	126		7-A-140		7170-3X
442KXBQX-*5 (3)	140	Opp	149		7-A-140		7170-3X	442KXBQX-*3 (3)	140	Opp	149		7-A-140		7170-3X
ONE SPEED - TWO GEAR - POWERSHIFT (AIR)															
236KDBQX-*5 (3)	250	Opp	49		7-A-140		7170-3X	236KDBQX-*3 (3)	250	Opp	49		7-A-140		7170-3X
236KKBQX-*5 (3)	250	Opp	62		7-A-140		7170-3X	236KKBQX-*3 (3)	250	Opp	62		7-A-140		7170-3X
236KQBQX-*5 (3)	250	Opp	85		7-A-140		7170-3X	236KQBQX-*3 (3)	250	Opp	85		7-A-140		7170-3X
236KUBQX-*5 (3)	225	Opp	97		7-A-140		7170-3X	236KUBQX-*3 (3)	225	Opp	97		7-A-140		7170-3X
ONE SPEED - FORWARD & REVERSE															
340SFBQX-*5 (4)	200	Opp	43	45	7-A-270		328170-76X	340SFBQX-*5 (4)	200	Opp	43	45	7-A-270		328170-76X
352XSBQX-*5 (3)	140	Opp	91	118	7-A-140		7170-3X	352XSBQX-*3 (3)	140	Opp	91	118	7-A-140		7170-3X
TWO SPEEDS - FORWARD & REVERSE															
321XNBQX-*5	140	Opp	129	87	7-A-140		Furnished	321XNBQX-*3	140	Opp	129	87	7-A-140		Furnished
ONE SPEED - DUAL SHAFT															
452XSBQX-*3 (3)	140	Opp	91		7-A-140		7170-3X	452XSBQX-*3 (3)	140	Opp	91		7-A-140		7170-3X
GEARED ADAPTERS															
626KBQX-4BP					7-A-140		7170-3X	626KBQX-3BP					7-A-140		7170-3X
630KBQX-4BP					7-A-140		7170-3X	630KBQX-3BP					7-A-140		7170-3X
645KBQX-4BP					7-A-140		7170-3X	645KBQX-3BP					7-A-140		7170-3X

NOTE: 100 Series will not mount on the left side due to output shaft interference.

(1) Gear and Shaft Kit No. KXA-2-P-578
(2) Input Gear Part No. 5-P-1084
(3) Input Gear Part No. 5-P-1023
(4) Input Gear Part No. 5-P-720

Parker Chelsea

Parker Hannifin Corporation
Chelsea Products Division
Olive Branch, MS 38654 USA

CM5952-A	ES62-5A
CM5952-C	ES67-5A
ES60-5A	
ES60-5C	
ES60-5F	

LEFT SIDE ONLY

TRANSMISSION GEAR DATA:
L.H. 6-Bolt Opening Gear FORWARD of Centerline
41 Teeth - R.H. HELIX
PITCH LINE TO APERTURE FACE:
.7200" (18.2900MM)

RIGHT SIDE ONLY

TRANSMISSION GEAR DATA:
R.H. 8-Bolt Opening Gear FORWARD of Centerline
41 Teeth - R.H. HELIX
PITCH LINE TO APERTURE FACE:
.4450" (11.3000MM)

Caution: Application Approval Required for P.T.O. Output Shaft Speeds Above 2500 R.P.M.

LEFT Side P.T.O. Model	Inter. Torq.	Dir. Rot.	Engine % Hi	Engine % Rev	Filler Block	Adapter Assy.	Stud Kit	RIGHT Side P.T.O. Model	Inter. Torq.	Dir. Rot.	Engine % Hi	Engine % Rev	Filler Block	Adapter Assy.	Stud Kit
ONE SPEED - SINGLE GEAR - MECHANICAL SHIFT															
								100XRBGX-*3 (1)	125	Eng	83		7-A-125(P)	328564X	Furnished
ONE SPEED - TWO GEAR - MECHANICAL SHIFT															
442KFBGX-*5 (2)	250	Opp	49		7-A-300		7170-5X	442KFBGX-*3 (2)	250	Opp	49		7-A-187(P)	328564X	7170-4X
442KLBGX-*5 (3)	250	Opp	64		7-A-300		7170-5X	442KLBGX-*3 (3)	250	Opp	64		7-A-187(P)	328564X	7170-4X
442KQBGX-*5 (3)	225	Opp	69		7-A-300		7170-5X	442KQBGX-*3 (3)	225	Opp	69		7-A-187(P)	328564X	7170-4X
442KRBGX-*5 (3)	225	Opp	80		7-A-300		7170-5X	442KRBGX-*3 (3)	225	Opp	80		7-A-187(P)	328564X	7170-4X
442KSBGX-*5 (3)	200	Opp	95		7-A-300		7170-5X	442KSBGX-*3 (3)	200	Opp	95		7-A-187(P)	328564X	7170-4X
442KUBGX-*5 (3)	195	Opp	113		7-A-300		7170-5X	442KUBGX-*3 (3)	195	Opp	113		7-A-187(P)	328564X	7170-4X
442KWBGX-*5 (3)	175	Opp	133		7-A-300		7170-5X	442KWBGX-*3 (3)	175	Opp	133		7-A-187(P)	328564X	7170-4X
442KXBGX-*5 (3)	140	Opp	157		7-A-300		7170-5X	442KXBGX-*3 (3)	140	Opp	157		7-A-187(P)	328564X	7170-4X
660KFBGX-*5 (4)	375	Opp	49		7-A-300		7170-5X	489XFBGX-*3 (2)	250	Opp	49		8-A-248		328170-192X
660KQBGX-*5 (5)	375	Opp	69		7-A-300		7170-5X	489XLBGX-*3 (3)	250	Opp	64		8-A-093 8-A-248		328170-192X
660KSBGX-*5 (6)	325	Opp	95		7-A-300		7170-5X	489XQBGX-*3 (3)	225	Opp	69		8-A-093 8-A-248		328170-192X
								489XRBGX-*3 (3)	225	Opp	80		8-A-093 8-A-248		328170-192X
								489XSBGX-*3 (3)	200	Opp	95		8-A-093 8-A-248		328170-192X
								489XUBGX-*3 (3)	195	Opp	113		8-A-093 8-A-248		328170-192X
								489XWBGX-*3 (3)	175	Opp	133		8-A-093 8-A-248		328170-192X
								489XXBGX-*3 (3)	140	Opp	157		8-A-093 8-A-248		328170-192X
								680XFBGX-*3 (4)	375	Opp	49		8-A-093 8-A-248		328170-192X
								680XQBGX-*3 (5)	375	Opp	69		8-A-093 8-A-248		328170-192X
								680XSBGX-*3 (6)	325	Opp	95		8-A-093 8-A-248		328170-192X
								880XBBGX-*3 (7)	500	Opp	34		8-A-093 8-A-295		328170-14X
								880XMBGX-*3 (8)	500	Opp	61		8-A-295		328170-14X
								880XRBGX-*3 (9)	400	Opp	84		8-A-295		328170-14x

Continued Next Page

CAUTION: 660/680 Series: Applications above 1500 RPM output shaft speed, contact Chelsea Technical Service for approval.

(1) Gear and Shaft Kit No. KXA-2-P-571
(2) Input Gear Part No. 5-P-1082
(3) Input Gear Part No. 5-P-1015
(4) Input Gear Part No. 5-P-1325
(5) Input Gear Part No. 5-P-1326
(6) Input Gear Part No. 5-P-1327
(7) Input Gear Part No. 5-P-1116
(8) Input Gear Part No. 5-P-1175
(9) Input Gear Part No. 5-P-1117

CM5952-A	ES62-5A
CM5952-C	ES67-5A
ES60-5A	
ES60-5C	
ES60-5F	

LEFT SIDE ONLY

TRANSMISSION GEAR DATA:
L.H. 6-Bolt Opening Gear FORWARD of Centerline
41 Teeth - R.H. HELIX

PITCH LINE TO APERTURE FACE:
.7200" (18.2900MM)

RIGHT SIDE ONLY

TRANSMISSION GEAR DATA:
R.H. 8-Bolt Opening Gear FORWARD of Centerline
41 Teeth - R.H. HELIX

PITCH LINE TO APERTURE FACE:
.4450" (11.3000MM)

Caution: Application Approval Required for P.T.O. Output Shaft Speeds Above 2500 R.P.M.

LEFT Side P.T.O. Model	Inter. Torq.	Dir. Rot.	Engine % Hi	Engine % Rev	Filler Block	Adapter Assy.	Stud Kit	RIGHT Side P.T.O. Model	Inter. Torq.	Dir. Rot.	Engine % Hi	Engine % Rev	Filler Block	Adapter Assy.	Stud Kit
ONE SPEED - TWO GEAR - MECHANICAL SHIFT															
								880XTBGX-*3 (10)	350	Opp	108		8-A-295		328170-14X
ONE SPEED - TWO GEAR - POWERSHIFT (AIR)															
236KDBGX-*5 (3)	250	Opp	52		7-A-300		7170-5X	236KDBGX-*3 (3)	250	Opp	52		7-A-187(P)	328564X	7170-4X
236KKBGX-*5 (3)	250	Opp	66		7-A-300		7170-5X	236KKBGX-*3 (3)	250	Opp	66		7-A-187(P)	328564X	7170-4X
236KQBGX-*5 (3)	250	Opp	89		7-A-300		7170-5X	236KQBGX-*3 (3)	250	Opp	89		7-A-187(P)	328564X	7170-4X
236KUBGX-*5 (3)	225	Opp	102		7-A-300		7170-5X	236KUBGX-*3 (3)	225	Opp	102		7-A-187(P)	328564X	7170-4X
ONE SPEED - FORWARD & REVERSE															
340XFBGX-*5 (11)	200	Opp	45	47	7-A-140 (12) 7-A-300		7170-5X	340XFBGX-*5 (11)	200	Opp	45	47	7-A-140(P)(12) 7-A-125(P)	328564X	Furnished
352XSBGX-*5 (3)	140	Opp	92	119	7-A-400		7170-5X	352XSBGX-*3 (3)	140	Opp	92	119	7-A-187(P)	328564X	7170-4X
								863XBBGX-*5	500	Opp	34	42	8-A-295		328170-14X
ONE SPEED - DUAL SHAFT															
452XSBGX-*3 (3)	140	Opp	92		7-A-400		7170-5X	452XSBGX-*3 (3)	140	Opp	92		7-A-187(P)	328564X	7170-4X
GEARED ADAPTERS															
626KBGX-4HB					7-A-400		7170-5X	628XBGX-3HB					8-A-375		328170-192X
630KBGX-4HB					7-A-400		7170-5X								
645KBGX-4HB					7-A-400		7170-5X								

CAUTION: 660/680 Series: Applications above 1500 RPM output shaft speed, contact Chelsea Technical Service for approval.

(3) Input Gear Part No. 5-P-1015
(10) Input Gear Part No. 5-P-1177
(11) Input Gear Part No. 5-P-580
(12) Filler block furnished with P.T.O.

CM5952-B

LEFT SIDE ONLY	RIGHT SIDE ONLY
TRANSMISSION GEAR DATA: L.H. 6-Bolt Opening Gear FORWARD of Centerline 39 Teeth - R.H. HELIX **PITCH LINE TO APERTURE FACE:** .8820" (22.4000MM)	**TRANSMISSION GEAR DATA:** R.H. 8-Bolt Opening Gear FORWARD of Centerline 39 Teeth - R.H. HELIX **PITCH LINE TO APERTURE FACE:** .6070" (15.4200MM)

Caution: Application Approval Required for P.T.O. Output Shaft Speeds Above 2500 R.P.M.

LEFT Side P.T.O. Model	Inter. Torq.	Dir. Rot.	Engine % Hi	Engine % Rev	Filler Block	Adapter Assy.	Stud Kit	RIGHT Side P.T.O. Model	Inter. Torq.	Dir. Rot.	Engine % Hi	Engine % Rev	Filler Block	Adapter Assy.	Stud Kit
ONE SPEED - SINGLE GEAR - MECHANICAL SHIFT															
								100XRBGX-*3 (1)	125	Eng	79		7-A-062(P)	310778X	Furnished
ONE SPEED - TWO GEAR - MECHANICAL SHIFT															
442KFBGX-*5 (2)	250	Opp	47		7-A-200		7170-4X	442XFBGX-*3 (2)	250	Opp	47		7-A-032(P)	328564X	Furnished
442KLBGX-*5 (3)	250	Opp	61		7-A-200		7170-4X	442XLBGX-*3 (3)	250	Opp	61		7-A-032(P)	328564X	Furnished
442KQBGX-*5 (3)	225	Opp	66		7-A-200		7170-4X	442XQBGX-*3 (3)	225	Opp	66		7-A-032(P)	328564X	Furnished
442KRBGX-*5 (3)	225	Opp	76		7-A-200		7170-4X	442XRBGX-*3 (3)	225	Opp	76		7-A-032(P)	328564X	Furnished
442KSBGX-*5 (3)	200	Opp	90		7-A-200		7170-4X	442XSBGX-*3 (3)	200	Opp	90		7-A-032(P)	328564X	Furnished
442KUBGX-*5 (3)	195	Opp	108		7-A-200		7170-4X	442XUBGX-*3 (3)	195	Opp	108		7-A-032(P)	328564X	Furnished
442KWBGX-*5 (3)	175	Opp	127		7-A-200		7170-4X	442XWBGX-*3 (3)	175	Opp	127		7-A-032(P)	328564X	Furnished
442KXBGX-*5 (3)	140	Opp	150		7-A-200		7170-4X	442XXBGX-*3 (3)	140	Opp	150		7-A-032(P)	328564X	Furnished
660KFBGX-*5 (4)	375	Opp	47		7-A-200		7170-4X	489XFBGX-*3 (2)	250	Opp	47		8-A-062		328170-190X
660KQBGX-*5 (5)	375	Opp	66		7-A-200		7170-4X	489XLBGX-*3 (3)	250	Opp	61		8-A-093 8-A-062		328170-190X
660KSBGX-*5 (6)	325	Opp	90		7-A-200		7170-4X	489XQBGX-*3 (3)	225	Opp	66		8-A-093 8-A-062		328170-190X
								489XRBGX-*3 (3)	225	Opp	76		8-A-093 8-A-062		328170-190X
								489XSBGX-*3 (3)	200	Opp	90		8-A-093 8-A-062		328170-190X
								489XUBGX-*3 (3)	195	Opp	108		8-A-093 8-A-062		328170-190X
								489XWBGX-*3 (3)	175	Opp	127		8-A-093 8-A-062		328170-190X
								489XXBGX-*3 (3)	140	Opp	150		8-A-093 8-A-062		328170-190X
								680XFBGX-*3 (4)	375	Opp	47		8-A-093 8-A-062		328170-190X
								680XQBGX-*3 (5)	375	Opp	66		8-A-093 8-A-062		328170-190X
								680XSBGX-*3 (6)	325	Opp	90		8-A-093 8-A-062		328170-190X
								880XBBGX-*3 (7)	500	Opp	32		8-A-093 8-A-165		328170-15X
								880XMBGX-*3 (8)	500	Opp	58		8-A-165		328170-15X
								880XRBGX-*3 (9)	400	Opp	80		8-A-165		328170-15X

Continued Next Page

CAUTION: 660/680 Series: Applications above 1500 RPM output shaft speed, contact Chelsea Technical Service for approval.

(1) Gear and Shaft Kit No. KXA-2-P-571
(2) Input Gear Part No. 5-P-1082
(3) Input Gear Part No. 5-P-1015
(4) Input Gear Part No. 5-P-1325
(5) Input Gear Part No. 5-P-1326
(6) Input Gear Part No. 5-P-1327
(7) Input Gear Part No. 5-P-1116
(8) Input Gear Part No. 5-P-1175
(9) Input Gear Part No. 5-P-1117

Parker Hannifin Corporation
Chelsea Products Division
Olive Branch, MS 38654 USA

CM5952-B

LEFT SIDE ONLY	RIGHT SIDE ONLY
TRANSMISSION GEAR DATA: L.H. 6-Bolt Opening Gear FORWARD of Centerline 39 Teeth - R.H. HELIX **PITCH LINE TO APERTURE FACE:** .8820" (22.4000MM)	**TRANSMISSION GEAR DATA:** R.H. 8-Bolt Opening Gear FORWARD of Centerline 39 Teeth - R.H. HELIX **PITCH LINE TO APERTURE FACE:** .6070" (15.4200MM)

Caution: Application Approval Required for P.T.O. Output Shaft Speeds Above 2500 R.P.M.

LEFT Side P.T.O. Model	Inter. Torq.	Dir. Rot.	Engine % Hi	Engine % Rev	Filler Block	Adapter Assy.	Stud Kit	RIGHT Side P.T.O. Model	Inter. Torq.	Dir. Rot.	Engine % Hi	Engine % Rev	Filler Block	Adapter Assy.	Stud Kit
ONE SPEED - TWO GEAR - MECHANICAL SHIFT															
								880XTBGX-*3 (10)	350	Opp	103		8-A-165		328170-15X
ONE SPEED - TWO GEAR - POWERSHIFT (AIR)															
236KDBGX-*5 (3)	250	Opp	49		7-A-200		7170-4X	236XDBGX-*3 (3)	250	Opp	49		7-A-032(P)	328564X	Furnished
236KKBGX-*5 (3)	250	Opp	63		7-A-200		7170-4X	236XKBGX-*3 (3)	250	Opp	63		7-A-032(P)	328564X	Furnished
236KQBGX-*5 (3)	250	Opp	85		7-A-200		7170-4X	236XQBGX-*3 (3)	250	Opp	85		7-A-032(P)	328564X	Furnished
236KUBGX-*5 (3)	225	Opp	98		7-A-200		7170-4X	236XUBGX-*3 (3)	225	Opp	98		7-A-032(P)	328564X	Furnished
ONE SPEED - FORWARD & REVERSE															
340XFBGX-*5 (11)	200	Opp	43	45	7-A-140 (12) 7-A-165		7170-4X	340XFBGX-*5 (11)	200	Opp	43	45	7-A-140(P)(12)	328564X	Furnished
352XSBGX-*5 (3)	140	Opp	88	113	7-A-200		7170-4X	352XSBGX-*3 (3)	140	Opp	88	113	7-A-032(P)	328564X	Furnished
								863XBBGX-*5	500	Opp	32	40	8-A-165		328170-15X
ONE SPEED - DUAL SHAFT															
452XSBGX-*3 (3)	140	Opp	88		7-A-200		7170-4X	452XSBGX-*3 (3)	140	Opp	88		7-A-032(P)	328564X	Furnished
GEARED ADAPTERS															
626KBGX-4HB					7-A-200		7170-4X	628XBGX-3HB					8-A-190		328170-190X
630KBGX-4HB					7-A-200		7170-4X								
645KBGX-4HB					7-A-200		7170-4X								

CAUTION: 660/680 Series: Applications above 1500 RPM output shaft speed, contact Chelsea Technical Service for approval.

(3) Input Gear Part No. 5-P-1015
(10) Input Gear Part No. 5-P-1177
(11) Input Gear Part No. 5-P-580
(12) Filler block furnished with P.T.O.

Parker Hannifin Corporation
Chelsea Products Division
Olive Branch, MS 38654 USA

CM5952-D
ES55-5D
ES60-5D
ES62-5D
ES67-5D

LEFT SIDE ONLY

TRANSMISSION GEAR DATA:
L.H. 6-Bolt Opening Gear FORWARD of Centerline
43 Teeth - R.H. HELIX
PITCH LINE TO APERTURE FACE:
.5600" (14.2200MM)

RIGHT SIDE ONLY

TRANSMISSION GEAR DATA:
R.H. 8-Bolt Opening Gear FORWARD of Centerline
43 Teeth - R.H. HELIX
PITCH LINE TO APERTURE FACE:
.2840" (7.2100MM)

Caution: Application Approval Required for P.T.O. Output Shaft Speeds Above 2500 R.P.M.

LEFT Side P.T.O. Model	Inter. Torq.	Dir. Rot.	Engine % Hi	Engine % Rev	Filler Block	Adapter Assy.	Stud Kit	RIGHT Side P.T.O. Model	Inter. Torq.	Dir. Rot.	Engine % Hi	Engine % Rev	Filler Block	Adapter Assy.	Stud Kit
ONE SPEED - SINGLE GEAR - MECHANICAL SHIFT															
								100XRBGX-*3 (1)	125	Eng	87		7-A-300(P)	328564X	7170-13X
ONE SPEED - TWO GEAR - MECHANICAL SHIFT															
442KFBGX-*5 (2)	250	Opp	52		7-A-500		7170-5X	442KFBGX-*3 (2)	250	Opp	52		7-A-350(P)	328564X	7170-5X
442KLBGX-*5 (3)	250	Opp	67		7-A-500		7170-5X	442KLBGX-*3 (3)	250	Opp	67		7-A-350(P)	328564X	7170-5X
442KQBGX-*5 (3)	225	Opp	72		7-A-500		7170-5X	442KQBGX-*3 (3)	225	Opp	72		7-A-350(P)	328564X	7170-5X
442KRBGX-*5 (3)	225	Opp	84		7-A-500		7170-5X	442KRBGX-*3 (3)	225	Opp	84		7-A-350(P)	328564X	7170-5X
442KSBGX-*5 (3)	200	Opp	100		7-A-500		7170-5X	442KSBGX-*3 (3)	200	Opp	100		7-A-350(P)	328564X	7170-5X
442KUBGX-*5 (3)	195	Opp	119		7-A-500		7170-5X	442KUBGX-*3 (3)	195	Opp	119		7-A-350(P)	328564X	7170-5X
442KWBGX-*5 (3)	175	Opp	140		7-A-500		7170-5X	442KWBGX-*3 (3)	175	Opp	140		7-A-350(P)	328564X	7170-5X
442KXBGX-*5 (3)	140	Opp	165		7-A-500		7170-5X	442KXBGX-*3 (3)	140	Opp	165		7-A-350(P)	328564X	7170-5X
660KFBGX-*5 (4)	375	Opp	52		7-A-500		7170-7X	489XFBGX-*3 (2)	250	Opp	52		8-A-375		328170-192X
660KQBGX-*5 (5)	375	Opp	72		7-A-500		7170-7X	489XLBGX-*3 (3)	250	Opp	67		8-A-093 8-A-375		328170-192X
660KSBGX-*5 (6)	325	Opp	100		7-A-500		7170-7X	489XQBGX-*3 (3)	225	Opp	72		8-A-093 8-A-375		328170-192X
								489XRBGX-*3 (3)	225	Opp	84		8-A-093 8-A-375		328170-192X
								489XSBGX-*3 (3)	200	Opp	100		8-A-093 8-A-375		328170-192X
								489XUBGX-*3 (3)	195	Opp	119		8-A-093 8-A-375		328170-192X
								489XWBGX-*3 (3)	175	Opp	140		8-A-093 8-A-375		328170-192X
								489XXBGX-*3 (3)	140	Opp	165		8-A-093 8-A-375		328170-192X
								680XFBGX-*3 (4)	375	Opp	52		8-A-093 8-A-375		328170-192X
								680XQBGX-*3 (5)	375	Opp	72		8-A-093 8-A-375		328170-192X
								680XSBGX-*3 (6)	325	Opp	100		8-A-093 8-A-375		328170-192X
								880XBBGX-*3 (7)	500	Opp	36		8-A-093 8-A-500		Furnished
								880XMBGX-*3 (8)	500	Opp	64		8-A-500		Furnished
								880XRBGX-*3 (9)	400	Opp	88		8-A-500		Furnished

Continued Next Page

CAUTION: 660/680 Series: Applications above 1500 RPM output shaft speed, contact Chelsea Technical Service for approval.

(1) Gear and Shaft Kit No. KXA-2-P-571
(2) Input Gear Part No. 5-P-1082
(3) Input Gear Part No. 5-P-1015
(4) Input Gear Part No. 5-P-1325
(5) Input Gear Part No. 5-P-1326
(6) Input Gear Part No. 5-P-1327
(7) Input Gear Part No. 5-P-1116
(8) Input Gear Part No. 5-P-1175
(9) Input Gear Part No. 5-P-1117

Parker Hannifin Corporation
Chelsea Products Division
Olive Branch, MS 38654 USA

CM5952-D
ES55-5D
ES60-5D
ES62-5D
ES67-5D

LEFT SIDE ONLY

TRANSMISSION GEAR DATA:
L.H. 6-Bolt Opening Gear FORWARD of Centerline
43 Teeth - R.H. HELIX

PITCH LINE TO APERTURE FACE:
.5600" (14.2200MM)

RIGHT SIDE ONLY

TRANSMISSION GEAR DATA:
R.H. 8-Bolt Opening Gear FORWARD of Centerline
43 Teeth - R.H. HELIX

PITCH LINE TO APERTURE FACE:
.2840" (7.2100MM)

Caution: Application Approval Required for P.T.O. Output Shaft Speeds Above 2500 R.P.M.

LEFT Side P.T.O. Model	Inter. Torq.	Dir. Rot.	Engine % Hi	Engine % Rev	Filler Block	Adapter Assy.	Stud Kit	RIGHT Side P.T.O. Model	Inter. Torq.	Dir. Rot.	Engine % Hi	Engine % Rev	Filler Block	Adapter Assy.	Stud Kit
ONE SPEED - TWO GEAR - MECHANICAL SHIFT															
								880XTBGX-*3 (10)	350	Opp	113		8-A-500		Furnished
ONE SPEED - TWO GEAR - POWERSHIFT (AIR)															
236KDBGX-*5 (3)	250	Opp	54		7-A-500		7170-5X	236KDBGX-*3 (3)	250	Opp	54		7-A-350(P)	328564X	7170-5X
236KKBGX-*5 (3)	250	Opp	70		7-A-500		7170-5X	236KKBGX-*3 (3)	250	Opp	70		7-A-350(P)	328564X	7170-5X
236KQBGX-*5 (3)	250	Opp	94		7-A-500		7170-5X	236KQBGX-*3 (3)	250	Opp	94		7-A-350(P)	328564X	7170-5X
236KUBGX-*5 (3)	225	Opp	107		7-A-500		7170-5X	236KUBGX-*3 (3)	225	Opp	107		7-A-350(P)	328564X	7170-5X
ONE SPEED - FORWARD & REVERSE															
340XFBGX-*5 (11)	200	Opp	47	50	7-A-140 (12) 7-A-500		7170-6X	340XFBGX-*5 (11)	200	Opp	47	50	7-A-140(P)(12) 7-A-300(P)	328564X	7170-5X
352XSBGX-*5 (3)	140	Opp	97	125	7-A-500		7170-7X	352XSBGX-*3 (3)	140	Opp	97	125	7-A-300(P)	328564X	7170-5X
								863XBBGX-*5	500	Opp	36	44	8-A-500		Furnished
ONE SPEED - DUAL SHAFT															
452XSBGX-*3 (3)	140	Opp	97		7-A-500		7170-5X	452XSBGX-*3 (3)	140	Opp	97		7-A-300(P)	328564X	7170-5X
GEARED ADAPTERS															
626KBGX-4HB					7-A-500		7170-7X	628XBGX-3HB					8-A-500 8-A-032		328170-192X
630KBGX-4HB					7-A-500		7170-7X								
645KBGX-4HB					7-A-500		7170-7X								

CAUTION: 660/680 Series: Applications above 1500 RPM output shaft speed, contact Chelsea Technical Service for approval.

(3) Input Gear Part No. 5-P-1015
(10) Input Gear Part No. 5-P-1177
(11) Input Gear Part No. 5-P-580
(12) Filler block furnished with P.T.O.

Parker Hannifin Corporation
Chelsea Products Division
Olive Branch, MS 38654 USA

CM5952-E
ES60-5E

LEFT SIDE ONLY

TRANSMISSION GEAR DATA:
L.H. 6-Bolt Opening Gear FORWARD of Centerline
43 Teeth - R.H. HELIX
PITCH LINE TO APERTURE FACE:
.5600" (14.2200MM)

RIGHT SIDE ONLY

TRANSMISSION GEAR DATA:
R.H. 8-Bolt Opening Gear FORWARD of Centerline
43 Teeth - R.H. HELIX
PITCH LINE TO APERTURE FACE:
.2840" (7.2100MM)

Caution: Application Approval Required for P.T.O. Output Shaft Speeds Above 2500 R.P.M.

LEFT Side P.T.O. Model	Inter. Torq.	Dir. Rot.	Engine % Hi	Engine % Rev	Filler Block	Adapter Assy.	Stud Kit	RIGHT Side P.T.O. Model	Inter. Torq.	Dir. Rot.	Engine % Hi	Engine % Rev	Filler Block	Adapter Assy.	Stud Kit
ONE SPEED - SINGLE GEAR - MECHANICAL SHIFT															
								100XRBGX-*3 (1)	125	Eng	96		7-A-300(P)	328564X	7170-13X
ONE SPEED - TWO GEAR - MECHANICAL SHIFT															
442KFBGX-*5 (2)	250	Opp	57		7-A-562		7170-7X	442KFBGX-*3 (2)	250	Opp	57		7-A-350(P)	328564X	7170-5X
442KLBGX-*5 (3)	250	Opp	73		7-A-562		7170-7X	442KLBGX-*3 (3)	250	Opp	73		7-A-350(P)	328564X	7170-5X
442KQBGX-*5 (3)	225	Opp	79		7-A-562		7170-7X	442KQBGX-*3 (3)	225	Opp	79		7-A-350(P)	328564X	7170-5X
442KRBGX-*5 (3)	225	Opp	92		7-A-562		7170-7X	442KRBGX-*3 (3)	225	Opp	92		7-A-350(P)	328564X	7170-5X
442KSBGX-*5 (3)	200	Opp	109		7-A-562		7170-7X	442KSBGX-*3 (3)	200	Opp	109		7-A-350(P)	328564X	7170-5X
442KUBGX-*5 (3)	195	Opp	130		7-A-562		7170-7X	442KUBGX-*3 (3)	195	Opp	130		7-A-350(P)	328564X	7170-5X
442KWBGX-*5 (3)	175	Opp	153		7-A-562		7170-7X	442KWBGX-*3 (3)	175	Opp	153		7-A-350(P)	328564X	7170-5X
442KXBGX-*5 (3)	140	Opp	181		7-A-562		7170-7X	442KXBGX-*3 (3)	140	Opp	181		7-A-350(P)	328564X	7170-5X
660KFBGX-*5 (4)	375	Opp	57		7-A-562		7170-7X	489XFBGX-*3 (2)	250	Opp	57		8-A-375		328170-192X
660KQBGX-*5 (5)	375	Opp	79		7-A-562		7170-7X	489XLBGX-*3 (3)	250	Opp	73		8-A-093 8-A-375		328170-192X
660KSBGX-*5 (6)	325	Opp	109		7-A-562		7170-7X	489XQBGX-*3 (3)	225	Opp	79		8-A-093 8-A-375		328170-192X
								489XRBGX-*3 (3)	225	Opp	92		8-A-093 8-A-375		328170-192X
								489XSBGX-*3 (3)	200	Opp	109		8-A-093 8-A-375		328170-192X
								489XUBGX-*3 (3)	195	Opp	130		8-A-093 8-A-375		328170-192X
								489XWBGX-*3 (3)	175	Opp	153		8-A-093 8-A-375		328170-192X
								489XXBGX-*3 (3)	140	Opp	181		8-A-093 8-A-375		328170-192X
								680XFBGX-*3 (4)	375	Opp	57		8-A-093 8-A-375		328170-192X
								680XQBGX-*3 (5)	375	Opp	79		8-A-093 8-A-375		328170-192X
								680XSBGX-*3 (6)	325	Opp	109		8-A-093 8-A-375		328170-192X
								880XBBGX-*3 (7)	500	Opp	39		8-A-093 8-A-032		Furnished
								880XMBGX-*3 (8)	500	Opp	70		8-A-032		Furnished
								880XRBGX-*5 (9)	400	Opp	96		8-A-032		Furnished

Continued Next Page

CAUTION: 660/680 Series: Applications above 1500 RPM output shaft speed, contact Chelsea Technical Service for approval.

(1) Gear and Shaft Kit No. KXA-2-P-571
(2) Input Gear Part No. 5-P-1082
(3) Input Gear Part No. 5-P-1015
(4) Input Gear Part No. 5-P-1325
(5) Input Gear Part No. 5-P-1326
(6) Input Gear Part No. 5-P-1327
(7) Input Gear Part No. 5-P-1116
(8) Input Gear Part No. 5-P-1175
(9) Input Gear Part No. 5-P-1117

Parker Hannifin Corporation
Chelsea Products Division
Olive Branch, MS 38654 USA

CM5952-E

ES60-5E

LEFT SIDE ONLY	RIGHT SIDE ONLY
TRANSMISSION GEAR DATA: L.H. 6-Bolt Opening Gear FORWARD of Centerline 43 Teeth - R.H. HELIX **PITCH LINE TO APERTURE FACE:** .5600" (14.2200MM)	**TRANSMISSION GEAR DATA:** R.H. 8-Bolt Opening Gear FORWARD of Centerline 43 Teeth - R.H. HELIX **PITCH LINE TO APERTURE FACE:** .2840" (7.2100MM)

Caution: Application Approval Required for P.T.O. Output Shaft Speeds Above 2500 R.P.M.

LEFT Side P.T.O. Model	Inter. Torq.	Dir. Rot.	Engine % Hi	Engine % Rev	Filler Block	Adapter Assy.	Stud Kit	RIGHT Side P.T.O. Model	Inter. Torq.	Dir. Rot.	Engine % Hi	Engine % Rev	Filler Block	Adapter Assy.	Stud Kit
ONE SPEED - TWO GEAR - MECHANICAL SHIFT															
								880XTBGX-*3 (10)	350	Opp	124		8-A-032		Furnished
ONE SPEED - TWO GEAR - POWERSHIFT (AIR)															
236KDBGX-*5 (3)	250	Opp	59		7-A-562		7170-7X	236KDBGX-*3 (3)	250	Opp	59		7-A-350(P)	328564X	7170-5X
236KKBGX-*5 (3)	250	Opp	76		7-A-562		7170-7X	236KKBGX-*3 (3)	250	Opp	76		7-A-350(P)	328564X	7170-5X
236KQBGX-*5 (3)	250	Opp	103		7-A-562		7170-7X	236KQBGX-*3 (3)	250	Opp	103		7-A-350(P)	328564X	7170-5X
236KUBGX-*5 (3)	225	Opp	118		7-A-562		7170-7X	236KUBGX-*3 (3)	225	Opp	118		7-A-350(P)	328564X	7170-5X
ONE SPEED - FORWARD & REVERSE															
340XFBGX-*5 (11)	200	Opp	52	54	7-A-140 (12) 7-A-500		7170-6X	340XFBGX-*5 (11)	200	Opp	52	54	7-A-140(P)(12) 7-A-300(P)	328564X	7170-5X
352XSBGX-*5 (3)	140	Opp	106	137	7-A-562		7170-7X	352XSBGX-*3 (3)	140	Opp	106	137	7-A-300(P)	328564X	7170-5X
								863XBBGX-*5	500	Opp	39	48	8-A-032		Furnished
ONE SPEED - DUAL SHAFT															
452XSBGX-*3 (3)	140	Opp	106		7-A-562		7170-7X	452XSBGX-*3 (3)	140	Opp	106		7-A-300(P)	328564X	7170-5X
GEARED ADAPTERS															
626KBGX-4HB					7-A-562		7170-7X	628XBGX-3HB					8-A-500 8-A-032		328170-192X
630KBGX-4HB					7-A-562		7170-7X								
645KBGX-4HB					7-A-562		7170-7X								

CAUTION: 660/680 Series: Applications above 1500 RPM output shaft speed, contact Chelsea Technical Service for approval.

(3) Input Gear Part No. 5-P-1015
(10) Input Gear Part No. 5-P-1177
(11) Input Gear Part No. 5-P-580
(12) Filler block furnished with P.T.O.

Parker Hannifin Corporation
Chelsea Products Division
Olive Branch, MS 38654 USA

9072-A

PS97-7A

BOTTOM SIDE ONLY

TRANSMISSION GEAR DATA:

BOT 8-Bolt Opening Gear FORWARD of Centerline

50 Teeth - SPUR

PITCH LINE TO APERTURE FACE:

.9000" (22.8600MM)

RIGHT SIDE ONLY

TRANSMISSION GEAR DATA:

R.H. 6-Bolt Opening Gear FORWARD of Centerline

50 Teeth - SPUR

PITCH LINE TO APERTURE FACE:

1.0540" (26.7700MM)

Caution: Application Approval Required for P.T.O. Output Shaft Speeds Above 2500 R.P.M.

BOTTOM Side P.T.O. Model	Inter. Torq.	Dir. Rot.	Engine % Hi	Engine % Rev	Filler Block	Adapter Assy.	Stud Kit	RIGHT Side P.T.O. Model	Inter. Torq.	Dir. Rot.	Engine % Hi	Engine % Rev	Filler Block	Adapter Assy.	Stud Kit
ONE SPEED - SINGLE GEAR - MECHANICAL SHIFT															
100XRAHX-*3 (1)	125	Eng	88		7-A-062(P)	328481X	Furnished								
812XKAHX-*3	400	Eng	59		8-A-062		328170-115X								
ONE SPEED - TWO GEAR - MECHANICAL SHIFT															
221XCAHX-*3	250	Opp	39		7-A-032(P)(2) 7-A-062(P)	328481X	Furnished	221XCAHX-*3	250	Opp	39		7-A-032 (2) 7-A-140		328170-102X
221XEAHX-*3	250	Opp	45		7-A-062(P)	328481X	Furnished	221XEAHX-*3	250	Opp	45		7-A-140		328170-102X
221XLAHX-*3	200	Opp	61		7-A-062(P)	328481X	Furnished	221XLAHX-*3	200	Opp	61		7-A-140		328170-102X
221XPAHX-*3	200	Opp	74		7-A-062(P)	328481X	Furnished	221XPAHX-*3	200	Opp	74		7-A-140		328170-102X
442XAAHX-*3 (3)	250	Opp	35		7-A-032(P)	328481X	Furnished	442KAAHX-*3 (3)	250	Opp	35		7-A-140		7170-3X
442XCAHX-*3 (4)	250	Opp	44		7-A-032(P)	328481X	Furnished	442KCAHX-*3 (4)	250	Opp	44		7-A-140		7170-3X
442XFAHX-*3 (5)	250	Opp	55		7-A-032(P)	328481X	Furnished	442KFAHX-*3 (5)	250	Opp	55		7-A-140		7170-3X
442XHAHX-*3 (6)	250	Opp	64		7-A-032(P)	328481X	Furnished	442KHAHX-*3 (6)	250	Opp	64		7-A-140		7170-3X
442XLAHX-*3 (7)	250	Opp	71		7-A-032(P)	328481X	Furnished	442KLAHX-*3 (7)	250	Opp	71		7-A-140		7170-3X
442XQAHX-*3 (7)	225	Opp	76		7-A-032(P)	328481X	Furnished	442KQAHX-*3 (7)	225	Opp	76		7-A-140		7170-3X
442XRAHX-*3 (7)	225	Opp	88		7-A-032(P)	328481X	Furnished	442KRAHX-*3 (7)	225	Opp	88		7-A-140		7170-3X
442XSAHX-*3 (7)	200	Opp	105		7-A-032(P)	328481X	Furnished	442KSAHX-*3 (7)	200	Opp	105		7-A-140		7170-3X
442XUAHX-*3 (7)	195	Opp	125		7-A-032(P)	328481X	Furnished	442KUAHX-*3 (7)	195	Opp	125		7-A-140		7170-3X
442XWAHX-*3 (7)	175	Opp	147		7-A-032(P)	328481X	Furnished	442KWAHX-*3 (7)	175	Opp	147		7-A-140		7170-3X
442XXAHX-*3 (7)	140	Opp	174		7-A-032(P)	328481X	Furnished	442KXAHX-*3 (7)	140	Opp	174		7-A-140		7170-3X
489XAAHX-*3 (3)	250	Opp	35				Furnished	660KFAHX-*3 (8)	375	Opp	55		7-A-140		7170-3X
489XCAHX-*3 (4)	250	Opp	44				Furnished	660KQAHX-*3 (9)	375	Opp	76		7-A-140		7170-3X
489XFAHX-*3 (5)	250	Opp	55				Furnished	660KSAHX-*3 (10)	325	Opp	105		7-A-140		7170-3X
489XHAHX-*3 (6)	250	Opp	64				Furnished								
489XLAHX-*3 (7)	250	Opp	71				Furnished								
489XQAHX-*3 (7)	225	Opp	76				Furnished								
489XRAHX-*3 (7)	225	Opp	88				Furnished								
489XSAHX-*3 (7)	200	Opp	105				Furnished								
489XUAHX-*3 (7)	195	Opp	125				Furnished								
489XWAHX-*3 (7)	175	Opp	147				Furnished								
489XXAHX-*3 (7)	140	Opp	174				Furnished								
680XFAHX-*3 (8)	375	Opp	55				Furnished								
680XQAHX-*3 (9)	375	Opp	76				Furnished								
680XSAHX-*3 (10)	325	Opp	105				Furnished								
823XBAHX-*3 (11)	500	Opp	37				Furnished								

Continued Next Page

CAUTION: 660/680 Series: Applications above 1500 RPM output shaft speed, contact Chelsea Technical Service for approval.

NOTE: The AK & XK output flanges can not be used with the "A" & "C" ratios on the 489 Series P.T.O.s due to mounting stud interference. Use a RA or RB rotatable flange for the XK and the RA for the AK flange.

NOTE: If Ordering the 230/231 Series with the Shaft Brake Option, order the "BA" Output for Automatic Transmissions and the "BD" Output for Manual Transmissions.

(1) Gear and Shaft Kit No. KXA-2-P-565
(2) Filler block furnished with P.T.O.
(3) Input Gear Part No. 5-P-1280
(4) Input Gear Part No. 5-P-1287
(5) Input Gear Part No. 5-P-1077
(6) Input Gear Part No. 5-P-1364
(7) Input Gear Part No. 5-P-1004
(8) Input Gear Part No. 5-P-1242
(9) Input Gear Part No. 5-P-1246
(10) Input Gear Part No. 5-P-1322
(11) Input Gear Part No. 5-P-285

January 2008

Parker Hannifin Corporation
Chelsea Products Division
Olive Branch, MS 38654 USA

9072-A

PS97-7A

BOTTOM SIDE ONLY	RIGHT SIDE ONLY
TRANSMISSION GEAR DATA: BOT 8-Bolt Opening Gear FORWARD of Centerline 50 Teeth - SPUR **PITCH LINE TO APERTURE FACE:** .9000" (22.8600MM)	**TRANSMISSION GEAR DATA:** R.H. 6-Bolt Opening Gear FORWARD of Centerline 50 Teeth - SPUR **PITCH LINE TO APERTURE FACE:** 1.0540" (26.7700MM)

Caution: Application Approval Required for P.T.O. Output Shaft Speeds Above 2500 R.P.M.

BOTTOM Side P.T.O. Model	Inter. Torq.	Dir. Rot.	Engine % Hi	Engine % Rev	Filler Block	Adapter Assy.	Stud Kit	RIGHT Side P.T.O. Model	Inter. Torq.	Dir. Rot.	Engine % Hi	Engine % Rev	Filler Block	Adapter Assy.	Stud Kit
ONE SPEED - TWO GEAR - MECHANICAL SHIFT															
823XJAHX-*3 (12)	500	Opp	56				Furnished								
823XMAHX-*3 (13)	500	Opp	66				Furnished								
823XRAHX-*3 (14)	400	Opp	91				Furnished								
823XTKTX-*3 (15)	350	Opp	111		8-A-165 (2)		Furnished								
880XBAHX-*3 (16)	500	Opp	37				Furnished								
880XDAHX-*3 (17)	500	Opp	44				Furnished								
880XGAHX-*3 (18)	500	Opp	48				Furnished								
880XJAHX-*3 (19)	500	Opp	56				Furnished								
880XMAHX-*3 (20)	500	Opp	66				Furnished								
880XQAHX-*3 (21)	450	Opp	77				Furnished								
880XRAHX-*3 (22)	400	Opp	91				Furnished								
880XTAHX-*3 (23)	350	Opp	118				Furnished								
ONE SPEED - TWO GEAR - POWERSHIFT (AIR)															
236XDAHX-*3 (7)	250	Opp	58		7-A-032(P)	328481X	Furnished	230XAAJX-*3	250	Opp	29				Furnished
236XKAHX-*3 (7)	250	Opp	73		7-A-032(P)	328481X	Furnished	230XBAJX-*3	250	Opp	37				Furnished
236XQAHX-*3 (7)	250	Opp	99		7-A-032(P)	328481X	Furnished	230XDAJX-*3	250	Opp	43				Furnished
236XUAHX-*3 (7)	225	Opp	113		7-A-032(P)	328481X	Furnished	230XKAJX-*3	250	Opp	59				Furnished
885XBAHX-*3 (16)	500	Opp	37				Furnished	230XQAJX-*3	250	Opp	78				Furnished
885XGAHX-*3 (18)	500	Opp	48				Furnished	230XUAJX-*3	225	Opp	125				Furnished
885XJAHX-*3 (19)	500	Opp	56				Furnished	236KDAHX-*3 (7)	250	Opp	58		7-A-140		7170-3X
885XMAHX-*3 (20)	500	Opp	66				Furnished	236KKAHX-*3 (7)	250	Opp	73		7-A-140		7170-3X
								236KQAHX-*3 (7)	250	Opp	99		7-A-140		7170-3X
								236KUAHX-*3 (7)	225	Opp	113		7-A-140		7170-3X
ONE SPEED - FORWARD & REVERSE															
340XFAHX-*5 (24)	200	Opp	48	50	7-A-140(P)(2) 7-A-062	310778X	Furnished	340XFAHX-*5 (24)	200	Opp	48	50	7-A-140 (2) 7-A-165		7170-3X
352XSAHX-*3 (7)	140	Opp	107	138	7-A-062(P)	328481X	Furnished	352XSAHX-*3 (7)	140	Opp	107	138	7-A-140		7170-3X
863XBAHX-*5	500	Opp	37	46			Furnished								
ONE SPEED - DUAL SHAFT															
452XSAHX-*3 (7)	140	Opp	107		7-A-032(P)	328481X	Furnished	452XSAHX-*3 (7)	140	Opp	107		7-A-140		7170-3X

Continued Next Page

CAUTION: 660/680 Series: Applications above 1500 RPM output shaft speed, contact Chelsea Technical Service for approval.

NOTE: The AK & XK output flanges can not be used with the "A" & "C" ratios on the 489 Series P.T.O.s due to mounting stud interference. Use a RA or RB rotatable flange for the XK and the RA for the AK flange.

NOTE: If Ordering the 230/231 Series with the Shaft Brake Option, order the "BA" Output for Automatic Transmissions and the "BD" Output for Manual Transmissions.

(2) Filler block furnished with P.T.O.
(7) Input Gear Part No. 5-P-1004
(12) Input Gear Part No. 5-P-325
(13) Input Gear Part No. 5-P-283
(14) Input Gear Part No. 5-P-721
(15) Input Gear Part No. 5-P-1395
(16) Input Gear Part No. 5-P-1100
(17) Input Gear Part No. 5-P-1101
(18) Input Gear Part No. 5-P-1135
(19) Input Gear Part No. 5-P-1102
(20) Input Gear Part No. 5-P-1103
(21) Input Gear Part No. 5-P-1385
(22) Input Gear Part No. 5-P-1104
(23) Input Gear Part No. 5-P-1105
(24) Input Gear Part No. 5-P-581

January 2008

Parker Hannifin Corporation
Chelsea Products Division
Olive Branch, MS 38654 USA

9072-A

PS97-7A

BOTTOM SIDE ONLY	RIGHT SIDE ONLY
TRANSMISSION GEAR DATA: BOT 8-Bolt Opening Gear FORWARD of Centerline 50 Teeth - SPUR **PITCH LINE TO APERTURE FACE:** .9000" (22.8600MM)	**TRANSMISSION GEAR DATA:** R.H. 6-Bolt Opening Gear FORWARD of Centerline 50 Teeth - SPUR **PITCH LINE TO APERTURE FACE:** 1.0540" (26.7700MM)

Caution: Application Approval Required for P.T.O. Output Shaft Speeds Above 2500 R.P.M.

GEARED ADAPTERS

BOTTOM Side P.T.O. Model	Inter. Torq.	Dir. Rot.	Engine % Hi	Engine % Rev	Filler Block	Adapter Assy.	Stud Kit	RIGHT Side P.T.O. Model	Inter. Torq.	Dir. Rot.	Engine % Hi	Engine % Rev	Filler Block	Adapter Assy.	Stud Kit
628XAHX-3AH					8-A-032	Furnished		626KAHX-3AH					7-A-140		7170-3X
								630KAHX-3AH					7-A-140		7170-3X
								645KAHX-3AH					7-A-140		7170-3X

CAUTION: 660/680 Series: Applications above 1500 RPM output shaft speed, contact Chelsea Technical Service for approval.

NOTE: The AK & XK output flanges can not be used with the "A" & "C" ratios on the 489 Series P.T.O.s due to mounting stud interference. Use a RA or RB rotatable flange for the XK and the RA for the AK flange.

NOTE: If Ordering the 230/231 Series with the Shaft Brake Option, order the "BA" Output for Automatic Transmissions and the "BD" Output for Manual Transmissions.

Parker Hannifin Corporation
Chelsea Products Division
Olive Branch, MS 38654 USA

CM4954-A
ES43-5A
ES52-5A
ES53-5A

LEFT SIDE ONLY	RIGHT SIDE ONLY
TRANSMISSION GEAR DATA: L.H. 6-Bolt Opening Gear FORWARD of Centerline 32 Teeth - R.H. HELIX **PITCH LINE TO APERTURE FACE:** 1.1010" (27.9654MM)	**TRANSMISSION GEAR DATA:** R.H. 6-Bolt Opening Gear FORWARD of Centerline 32 Teeth - R.H. HELIX **PITCH LINE TO APERTURE FACE:** 1.1010" (27.9654MM)

Caution: Application Approval Required for P.T.O. Output Shaft Speeds Above 2500 R.P.M.

LEFT Side P.T.O. Model	Inter. Torq.	Dir. Rot.	Engine % Hi	Engine % Rev	Filler Block	Adapter Assy.	Stud Kit	RIGHT Side P.T.O. Model	Inter. Torq.	Dir. Rot.	Engine % Hi	Engine % Rev	Filler Block	Adapter Assy.	Stud Kit
ONE SPEED - SINGLE GEAR - MECHANICAL SHIFT															
								100XRAPX-*3 (1)	125	Eng	69				Furnished
ONE SPEED - TWO GEAR - MECHANICAL SHIFT															
442XAAPX-*5 (2)	250	Opp	26				Furnished	442XAAPX-*3 (2)	250	Opp	26				Furnished
442XCAPX-*5 (3)	250	Opp	33				Furnished	442XCAPX-*3 (3)	250	Opp	33				Furnished
442XFAPX-*5 (4)	250	Opp	41				Furnished	442XFAPX-*3 (4)	250	Opp	41				Furnished
442XLAPX-*5 (5)	250	Opp	53				Furnished	442XLAPX-*3 (5)	250	Opp	53				Furnished
442XQAPX-*5 (5)	225	Opp	58				Furnished	442XQAPX-*3 (5)	225	Opp	58				Furnished
442XRAPX-*5 (5)	225	Opp	67				Furnished	442XRAPX-*3 (5)	225	Opp	67				Furnished
442XSAPX-*5 (5)	200	Opp	79				Furnished	442XSAPX-*3 (5)	200	Opp	79				Furnished
442XUAPX-*5 (5)	195	Opp	94				Furnished	442XUAPX-*3 (5)	195	Opp	94				Furnished
442XWAPX-*5 (5)	175	Opp	111				Furnished	442XWAPX-*3 (5)	175	Opp	111				Furnished
442XXAPX-*5 (5)	140	Opp	132				Furnished	442XXAPX-*3 (5)	140	Opp	132				Furnished
ONE SPEED - TWO GEAR - POWERSHIFT (AIR)															
236XDAPX-*5 (5)	250	Opp	43				Furnished	236XDAPX-*3 (5)	250	Opp	43				Furnished
236XKAPX-*5 (5)	250	Opp	56				Furnished	236XKAPX-*3 (5)	250	Opp	56				Furnished
236XQAPX-*5 (5)	250	Opp	75				Furnished	236XQAPX-*3 (5)	250	Opp	75				Furnished
236XUAPX-*5 (5)	225	Opp	86				Furnished	236XUAPX-*3 (5)	225	Opp	86				Furnished
ONE SPEED - FORWARD & REVERSE															
340XFAPX-*5 (6)	200	Opp	38	40	7-A-140 (7)		Furnished	340XFAPX-*5 (6)	200	Opp	38	40	7-A-140 (7)		Furnished
352XSAPX-*5 (5)	140	Opp	80	104			Furnished	352XSAPX-*3 (5)	140	Opp	80	104			Furnished
ONE SPEED - DUAL SHAFT															
452XSAPX-*3 (5)	140	Opp	80				Furnished	452XSAPX-*3 (5)	140	Opp	80				Furnished
GEARED ADAPTERS															
626XAPX-4GX							Furnished	626XAPX-3GX							Furnished
630XAPX-4GX							Furnished	630XAPX-3GX							Furnished
645XAPX-4GX							Furnished	645XAPX-3GX							Furnished

CAUTION: Do not use geared adapters with 442 "A" and "C" ratios.

NOTE: 100 Series will not mount on the left side due to output shaft interference.

NOTE: The ES-43-5A, ES52-5A and ES53-5A transmissions have two six bolt openings on the left hand side. The front opening is for P.T.O. application. The rear opening is for assembly of the reverse idler gear.

(1) Gear and Shaft Kit No. KXA-2-P-685
(2) Input Gear Part No. 5-P-1282
(3) Input Gear Part No. 5-P-1289
(4) Input Gear Part No. 5-P-1079
(5) Input Gear Part No. 5-P-1006
(6) Input Gear Part No. 5-P-845
(7) Filler block furnished with P.T.O.

Parker Hannifin Corporation
Chelsea Products Division
Olive Branch, MS 38654 USA

CM4954-D
ES43-5D
ES52-5D
ES53-5D

LEFT SIDE ONLY

TRANSMISSION GEAR DATA:
L.H. 6-Bolt Opening Gear FORWARD of Centerline
34 Teeth - R.H. HELIX
PITCH LINE TO APERTURE FACE:
.9220" (23.4188MM)

RIGHT SIDE ONLY

TRANSMISSION GEAR DATA:
R.H. 6-Bolt Opening Gear FORWARD of Centerline
34 Teeth - R.H. HELIX
PITCH LINE TO APERTURE FACE:
.9220" (23.4188MM)

Caution: Application Approval Required for P.T.O. Output Shaft Speeds Above 2500 R.P.M.

LEFT Side P.T.O. Model	Inter. Torq.	Dir. Rot.	Engine % Hi	Engine % Rev	Filler Block	Adapter Assy.	Stud Kit	RIGHT Side P.T.O. Model	Inter. Torq.	Dir. Rot.	Engine % Hi	Engine % Rev	Filler Block	Adapter Assy.	Stud Kit
ONE SPEED - SINGLE GEAR - MECHANICAL SHIFT															
								100XRAPX-*3 (1)	125	Eng	74		7-A-125		7170-11X
ONE SPEED - TWO GEAR - MECHANICAL SHIFT															
442KAAPX-*5 (2)	250	Opp	28		7-A-125		7170-3X	442KAAPX-*3 (2)	250	Opp	28		7-A-125		7170-3X
442KCAPX-*5 (3)	250	Opp	35		7-A-125		7170-3X	442KCAPX-*3 (3)	250	Opp	35		7-A-125		7170-3X
442KFAPX-*5 (4)	250	Opp	44		7-A-125		7170-3X	442KFAPX-*3 (4)	250	Opp	44		7-A-125		7170-3X
442KLAPX-*5 (5)	250	Opp	57		7-A-125		7170-3X	442KLAPX-*3 (5)	250	Opp	57		7-A-125		7170-3X
442KQAPX-*5 (5)	225	Opp	61		7-A-125		7170-3X	442KQAPX-*3 (5)	225	Opp	61		7-A-125		7170-3X
442KRAPX-*5 (5)	225	Opp	71		7-A-125		7170-3X	442KRAPX-*3 (5)	225	Opp	71		7-A-125		7170-3X
442KSAPX-*5 (5)	200	Opp	84		7-A-125		7170-3X	442KSAPX-*3 (5)	200	Opp	84		7-A-125		7170-3X
442KUAPX-*5 (5)	195	Opp	100		7-A-125		7170-3X	442KUAPX-*3 (5)	195	Opp	100		7-A-125		7170-3X
442KWAPX-*5 (5)	175	Opp	118		7-A-125		7170-3X	442KWAPX-*3 (5)	175	Opp	118		7-A-125		7170-3X
442KXAPX-*5 (5)	140	Opp	140		7-A-125		7170-3X	442KXAPX-*3 (5)	140	Opp	140		7-A-125		7170-3X
ONE SPEED - TWO GEAR - POWERSHIFT (AIR)															
236KDAPX-*5 (5)	250	Opp	46		7-A-125		7170-3X	236KDAPX-*3 (5)	250	Opp	46		7-A-125		7170-3X
236KKAPX-*5 (5)	250	Opp	59		7-A-125		7170-3X	236KKAPX-*3 (5)	250	Opp	59		7-A-125		7170-3X
236KQAPX-*5 (5)	250	Opp	79		7-A-125		7170-3X	236KQAPX-*3 (5)	250	Opp	79		7-A-125		7170-3X
236KUAPX-*5 (5)	225	Opp	91		7-A-125		7170-3X	236KUAPX-*3 (5)	225	Opp	91		7-A-125		7170-3X
ONE SPEED - FORWARD & REVERSE															
340SFAPX-*5 (6)	200	Opp	40	42	7-A-250		7170-4X	340SFAPX-*5 (6)	200	Opp	40	42	7-A-250		7170-4X
352XSAPX-*5 (5)	140	Opp	85	110	7-A-125		7170-3X	352XSAPX-*3 (5)	140	Opp	85	110	7-A-125		7170-3X
ONE SPEED - DUAL SHAFT															
452XSAPX-*3 (5)	140	Opp	85		7-A-125		7170-3X	452XSAPX-*3 (5)	140	Opp	85		7-A-125		7170-3X
GEARED ADAPTERS															
626KAPX-4GX					7-A-125		7170-3X	626KAPX-3GX					7-A-125		7170-3X
630KAPX-4GX					7-A-125		7170-3X	630KAPX-3GX					7-A-125		7170-3X
645KAPX-4GX					7-A-125		7170-3X	645KAPX-3GX					7-A-125		7170-3X

CAUTION: Do not use geared adapters with 442 "A" and "C" ratios.

NOTE: 100 Series will not mount on the left side due to output shaft interference.

NOTE: The ES-43-5D, ES52-5D and ES53-5D transmissions have two six bolt openingson the left hand side. The front opening is for P.T.O. application. The rear opening is for assembly of the reverse idler gear.

(1) Gear and Shaft Kit No. KXA-2-P-685
(2) Input Gear Part No. 5-P-1282
(3) Input Gear Part No. 5-P-1289
(4) Input Gear Part No. 5-P-1079
(5) Input Gear Part No. 5-P-1006
(6) Input Gear Part No. 5-P-845

Parker Hannifin Corporation
Chelsea Products Division
Olive Branch, MS 38654 USA

9505-2A	PSO105-7LL
9505-2B	
PS105-7LL	
PS125-6L	
PS130-6L	

BOTTOM SIDE ONLY

TRANSMISSION GEAR DATA:
BOT 8-Bolt Opening Gear FORWARD of Centerline
43 Teeth - SPUR

PITCH LINE TO APERTURE FACE:
1.4790" (37.5666MM)

RIGHT SIDE ONLY

TRANSMISSION GEAR DATA:
R.H. 6-Bolt Opening Gear FORWARD of Centerline
43 Teeth - SPUR

PITCH LINE TO APERTURE FACE:
1.6360" (41.5544MM)

Caution: Application Approval Required for P.T.O. Output Shaft Speeds Above 2500 R.P.M.

BOTTOM Side P.T.O. Model	Inter. Torq.	Dir. Rot.	Engine % Hi	Engine % Rev	Filler Block	Adapter Assy.	Stud Kit	RIGHT Side P.T.O. Model	Inter. Torq.	Dir. Rot.	Engine % Hi	Engine % Rev	Filler Block	Adapter Assy.	Stud Kit
ONE SPEED - SINGLE GEAR - MECHANICAL SHIFT															
								100XRAHX-*3 (1)	125	Opp	90		7-A-1468(T)	328530-1X	7170-50X
ONE SPEED - TWO GEAR - MECHANICAL SHIFT															
823ZBAHX-*3 (6)	500	Opp	38		8-A-295		328170-17X	221XCAHX-*3	250	Eng	40		7-A-1468(T) 7-A-062(P) 7-A-032 (2)	328530-1X	328170-36X
823ZJAHX-*3 (7)	500	Opp	57		8-A-295		328170-17X	221XEAHX-*3	250	Eng	46		7-A-1468(T)	328530-1X	328170-36X
823ZMAHX-*3 (8)	500	Opp	67		8-A-295		328170-17X	221XLAHX-*3	200	Eng	62		7-A-1468(T)	328530-1X	328170-36X
823ZRAHX-*3 (9)	400	Opp	93		8-A-295		328170-17X	221XPAHX-*3	200	Eng	75		7-A-1468(T)	328530-1X	328170-36X
880ZBAHX-*3 (10)	500	Opp	38		8-A-295		328170-17X	442KFAHX-*3 (3)	250	Eng	55		7-A-1468(T)	328530-1X	7170-26X
880ZDAHX-*3 (11)	500	Opp	45		8-A-295		328170-17X	442KHAHX-*3 (4)	250	Eng	64		7-A-1468(T)	328530-1X	7170-26X
880ZGAHX-*3 (12)	500	Opp	49		8-A-295		328170-17X	442KLAHX-*3 (5)	250	Eng	72		7-A-1468(T)	328530-1X	7170-26X
880ZJAHX-*3 (13)	500	Opp	57		8-A-295		328170-17X	442KQAHX-*3 (5)	225	Eng	77		7-A-1468(T)	328530-1X	7170-26X
880ZMAHX-*3 (14)	500	Opp	67		8-A-295		328170-17X	442KRAHX-*3 (5)	225	Eng	90		7-A-1468(T)	328530-1X	7170-26X
880ZQAHX-*3 (15)	450	Opp	79		8-A-295		328170-17X	442KSAHX-*3 (5)	200	Eng	107		7-A-1468(T)	328530-1X	7170-26X
880ZRAHX-*3 (16)	400	Opp	93		8-A-295		328170-17X	442KUAHX-*3 (5)	195	Eng	127		7-A-1468(T)	328530-1X	7170-26X
880ZTAHX-*3 (17)	350	Opp	119		8-A-295		328170-17X	442KWAHX-*3 (5)	175	Eng	149		7-A-1468(T)	328530-1X	7170-26X
								442KXAHX-*3 (5)	140	Eng	177		7-A-1468(T)	328530-1X	7170-26X
ONE SPEED - TWO GEAR - POWERSHIFT (AIR)															
885ZBAHX-*3 (10)	500	Opp	38		8-A-295		328170-17X	236KDAHX-*3 (5)	250	Eng	58		7-A-1468(T)	328530-1X	7170-26X
885ZGAHX-*3 (12)	500	Opp	49		8-A-295		328170-17X	236KKAHX-*3 (5)	250	Eng	75		7-A-1468(T)	328530-1X	7170-26X
885ZJAHX-*3 (13)	500	Opp	57		8-A-295		328170-17X	236KQAHX-*3 (5)	250	Eng	100		7-A-1468(T)	328530-1X	7170-26X
885ZMAHX-*3 (14)	500	Opp	67		8-A-295		328170-17X	236KUAHX-*3 (5)	225	Eng	115		7-A-1468(T)	328530-1X	7170-26X
ONE SPEED - FORWARD & REVERSE															
								340XFAHX-*5 (18)	200	Eng	48	51	7-A-140(P)(19) 7-A-1468(T)	328530-1X	7170-26X
								352XSAHX-*3 (5)	140	Eng	108	140	7-A-1468(T)	328530-1X	7170-26X
ONE SPEED - DUAL SHAFT															
								452XSAHX-*3 (5)	140	Eng	108		7-A-1468(T)	328530-1X	7170-26X

NOTE: Adapters not recommended on 8-Bolt openings.

NOTE: If Ordering the 230/231 Series with the Shaft Brake Option, order the "BA" Output for Automatic Transmissions and the "BD" Output for Manual Transmissions.

(1) Gear and Shaft Kit No. KXA-2-P-565
(2) Filler block furnished with P.T.O. but not required
(3) Input Gear Part No. 5-P-1077
(4) Input Gear Part No. 5-P-1364
(5) Input Gear Part No. 5-P-1004
(6) Input Gear Part No. 5-P-285
(7) Input Gear Part No. 5-P-325
(8) Input Gear Part No. 5-P-283
(9) Input Gear Part No. 5-P-721
(10) Input Gear Part No. 5-P-1100
(11) Input Gear Part No. 5-P-1101
(12) Input Gear Part No. 5-P-1135
(13) Input Gear Part No. 5-P-1102
(14) Input Gear Part No. 5-P-1103
(15) Input Gear Part No. 5-P-1385
(16) Input Gear Part No. 5-P-1104
(17) Input Gear Part No. 5-P-1105
(18) Input Gear Part No. 5-P-581
(19) Filler block furnished with P.T.O.

January 2008

Parker Hannifin Corporation
Chelsea Products Division
Olive Branch, MS 38654 USA

AS125-9A	LAS135-9A	PS125-9A
AS135-9A	LAS140-9A	PS140-9A
AS140-9A	LAS145-9A	PS9-VPD
LAS115-9A	LPS125-9A	PS95-9A
LAS125-9A	LPS140-9A	

LEFT SIDE ONLY

TRANSMISSION GEAR DATA:
L.H. 8-Bolt Opening Gear FORWARD of Centerline
45 Teeth - SPUR
PITCH LINE TO APERTURE FACE:
.7300" (18.5420MM)

RIGHT SIDE ONLY

TRANSMISSION GEAR DATA:
R.H. 6-Bolt Opening Gear REAR of Centerline
45 Teeth - SPUR
PITCH LINE TO APERTURE FACE:
1.0750" (27.3050MM)

Caution: Application Approval Required for P.T.O. Output Shaft Speeds Above 2500 R.P.M.

LEFT Side P.T.O. Model	Inter. Torq.	Dir. Rot.	Engine % Hi	Engine % Rev	Filler Block	Adapter Assy.	Stud Kit	RIGHT Side P.T.O. Model	Inter. Torq.	Dir. Rot.	Engine % Hi	Engine % Rev	Filler Block	Adapter Assy.	Stud Kit
ONE SPEED - SINGLE GEAR - MECHANICAL SHIFT															
812XKAHX-*3	400	Eng	77				Furnished								
ONE SPEED - TWO GEAR - MECHANICAL SHIFT															
221XCAHX-*5	250	Opp	51		7-A-062(P) 7-A-032 (1)	328481X	Furnished	221XCAHX-*4	250	Opp	51		7-A-062 7-A-032 (1)		Furnished
221XEAHX-*5	250	Opp	59			328481X	Furnished	221XEAHX-*4	250	Opp	59				Furnished
221XLAHX-*5	200	Opp	80			328481X	Furnished	221XLAHX-*4	200	Opp	80				Furnished
221XPAHX-*5	200	Opp	96			328481X	Furnished	221XPAHX-*4	200	Opp	96				Furnished
442XAAHX-*5 (2)	250	Opp	45			328481X	Furnished	442XFAHX-*4 (4)	250	Opp	71				Furnished
442XCAHX-*5 (3)	250	Opp	58			328481X	Furnished	442XHAHX-*4 (5)	250	Opp	82				Furnished
442XFAHX-*5 (4)	250	Opp	71			328481X	Furnished	442XLAHX-*4 (6)	250	Opp	92				Furnished
442XHAHX-*5 (5)	250	Opp	82			328481X	Furnished	442XQAHX-*4 (6)	225	Opp	100				Furnished
442XLAHX-*5 (6)	250	Opp	92			328481X	Furnished	442XRAHX-*4 (6)	225	Opp	115				Furnished
442XQAHX-*5 (6)	225	Opp	100			328481X	Furnished	442XSAHX-*4 (6)	200	Opp	137				Furnished
442XRAHX-*5 (6)	225	Opp	115			328481X	Furnished	442XUAHX-*4 (6)	195	Opp	164				Furnished
442XSAHX-*5 (6)	200	Opp	137			328481X	Furnished	442XWAHX-*4 (6)	175	Opp	192				Furnished
442XUAHX-*5 (6)	195	Opp	164			328481X	Furnished	442XXAHX-*4 (6)	140	Opp	228				Furnished
442XWAHX-*5 (6)	175	Opp	192			328481X	Furnished	660XFAHX-*4 (7)	375	Opp	71				Furnished
442XXAHX-*5 (6)	140	Opp	228			328481X	Furnished	660XQAHX-*4 (8)	375	Opp	100				Furnished
489XCAHX-*5 (3)	250	Opp	58				Furnished	660XSAHX-*4 (9)	325	Opp	137				Furnished
489XFAHX-*5 (4)	250	Opp	71				Furnished								
489XHAHX-*5 (5)	250	Opp	82				Furnished								
489XLAHX-*5 (6)	250	Opp	92				Furnished								
489XQAHX-*5 (6)	225	Opp	100				Furnished								
489XRAHX-*5 (6)	225	Opp	115				Furnished								
489XSAHX-*5 (6)	200	Opp	137				Furnished								
489XUAHX-*5 (6)	195	Opp	164				Furnished								
489XWAHX-*5 (6)	175	Opp	192				Furnished								
489XXAHX-*5 (6)	140	Opp	228				Furnished								
680XFAHX-*5 (7)	375	Opp	71				Furnished								
680XQAHX-*5 (8)	375	Opp	100				Furnished								
680XSAHX-*5 (9)	325	Opp	137				Furnished								
823XBAHX-*5 (10)	500	Opp	49				Furnished								
823XJAHX-*5 (11)	500	Opp	74				Furnished								
823XMAHX-*5 (12)	500	Opp	86				Furnished								

Continued Next Page

CAUTION: Do not use geared adapters with 442 "A" and "C" ratios.

CAUTION: 660/680 Series: Applications above 1500 RPM output shaft speed, contact Chelsea Technical Service for approval.

NOTE: The 100 Series will not mount on this transmission due to output shaft interference.

NOTE: The AK & XK output flanges can not be used with the "A" & "C" ratios on the 489 Series P.T.O.s due to mounting stud interference. Use a RA or RB rotatable flange for the XK and the RA for the AK flange.

NOTE: If Ordering the 230/231 Series with the Shaft Brake Option, order the "BA" Output for Automatic Transmissions and the "BD" Output for Manual Transmissions.

(1) Filler block furnished with P.T.O.
(2) Input Gear Part No. 5-P-1280
(3) Input Gear Part No. 5-P-1287
(4) Input Gear Part No. 5-P-1077
(5) Input Gear Part No. 5-P-1364
(6) Input Gear Part No. 5-P-1004
(7) Input Gear Part No. 5-P-1242
(8) Input Gear Part No. 5-P-1246
(9) Input Gear Part No. 5-P-1322
(10) Input Gear Part No. 5-P-285
(11) Input Gear Part No. 5-P-325
(12) Input Gear Part No. 5-P-283

January 2008

Parker Hannifin Corporation
Chelsea Products Division
Olive Branch, MS 38654 USA

AS125-9A	LAS135-9A	PS125-9A
AS135-9A	LAS140-9A	PS140-9A
AS140-9A	LAS145-9A	PS9-VPD
LAS115-9A	LPS125-9A	PS95-9A
LAS125-9A	LPS140-9A	

LEFT SIDE ONLY

TRANSMISSION GEAR DATA:
L.H. 8-Bolt Opening Gear FORWARD of Centerline
45 Teeth - SPUR

PITCH LINE TO APERTURE FACE:
.7300" (18.5420MM)

RIGHT SIDE ONLY

TRANSMISSION GEAR DATA:
R.H. 6-Bolt Opening Gear REAR of Centerline
45 Teeth - SPUR

PITCH LINE TO APERTURE FACE:
1.0750" (27.3050MM)

Caution: Application Approval Required for P.T.O. Output Shaft Speeds Above 2500 R.P.M.

LEFT Side P.T.O. Model	Inter. Torq.	Dir. Rot.	Engine % Hi	Engine % Rev	Filler Block	Adapter Assy.	Stud Kit	RIGHT Side P.T.O. Model	Inter. Torq.	Dir. Rot.	Engine % Hi	Engine % Rev	Filler Block	Adapter Assy.	Stud Kit
ONE SPEED - TWO GEAR - MECHANICAL SHIFT															
823XRAHX-*5 (13)	400	Opp	119				Furnished								
823XTKTX-*5 (14)	350	Opp	145		8-A-165 (1)		Furnished								
880XBAHX-*5 (15)	500	Opp	49				Furnished								
880XDAHX-*5 (16)	500	Opp	58				Furnished								
880XGAHX-*5 (17)	500	Opp	63				Furnished								
880XJAHX-*5 (18)	500	Opp	74				Furnished								
880XMAHX-*5 (19)	500	Opp	86				Furnished								
880XQAHX-*5 (20)	450	Opp	101				Furnished								
880XRAHX-*5 (21)	400	Opp	119				Furnished								
880XTAHX-*5 (22)	350	Opp	154				Furnished								
ONE SPEED - TWO GEAR - POWERSHIFT (AIR)															
230XAAJX-*5	250	Opp	38		7-A-093(P)	328481X	Furnished	230XAAJX-*4	250	Opp	38		7-A-093		Furnished
230XBAJX-*5	250	Opp	49		7-A-093(P)	328481X	Furnished	230XBAJX-*4	250	Opp	49		7-A-093		Furnished
230XDAJX-*5	250	Opp	57		7-A-093(P)	328481X	Furnished	230XDAJX-*4	250	Opp	57		7-A-093		Furnished
230XKAJX-*5	250	Opp	76		7-A-093(P)	328481X	Furnished	230XKAJX-*4	250	Opp	76		7-A-093		Furnished
230XQAJX-*5	250	Opp	102		7-A-093(P)	328481X	Furnished	230XQAJX-*4	250	Opp	102		7-A-093		Furnished
230XUAJX-*5	225	Opp	163		7-A-093(P)	328481X	Furnished	230XUAJX-*4	225	Opp	163		7-A-093		Furnished
236XDAHX-*5 (6)	250	Opp	75			328481X	Furnished	236XDAHX-*4 (6)	250	Opp	75				Furnished
236XKAHX-*5 (6)	250	Opp	96			328481X	Furnished	236XKAHX-*4 (6)	250	Opp	96				Furnished
236XQAHX-*5 (6)	250	Opp	129			328481X	Furnished	236XQAHX-*4 (6)	250	Opp	129				Furnished
236XUAHX-*5 (6)	225	Opp	148			328481X	Furnished	236XUAHX-*4 (6)	225	Opp	148				Furnished
885XBAHX-*5 (15)	500	Opp	49				Furnished								
885XGAHX-*5 (17)	500	Opp	63				Furnished								
885XJAHX-*5 (18)	500	Opp	74				Furnished								
885XMAHX-*5 (19)	500	Opp	86				Furnished								
ONE SPEED - FORWARD & REVERSE															
340XFAHX-*5 (23)	200	Opp	62	66	7-A-140(P)(24) 7-A-032(P)	328481X	Furnished	340XFAHX-*4 (23)	200	Opp	62	66	7-A-140 (1) 7-A-032		Furnished
352XSAHX-*5 (6)	140	Opp	139	180		328481X	Furnished	352XSAHX-*4 (6)	140	Opp	139	180			Furnished
863XBAHX-*5	500	Opp	49	60			Furnished								
ONE SPEED - DUAL SHAFT															
452XSAHX-*3 (6)	140	Opp	139			328481X	Furnished	452XSAHX-*6 (6)	140	Opp	139				Furnished

Continued Next Page

CAUTION: Do not use geared adapters with 442 "A" and "C" ratios.

CAUTION: 660/680 Series: Applications above 1500 RPM output shaft speed, contact Chelsea Technical Service for approval.

NOTE: The 100 Series will not mount on this transmission due to output shaft interference.

NOTE: The AK & XK output flanges can not be used with the "A" & "C" ratios on the 489 Series P.T.O.s due to mounting stud interference. Use a RA or RB rotatable flange for the XK and the RA for the AK flange.

NOTE: If Ordering the 230/231 Series with the Shaft Brake Option, order the "BA" Output for Automatic Transmissions and the "BD" Output for Manual Transmissions.

(1) Filler block furnished with P.T.O.
(6) Input Gear Part No. 5-P-1004
(13) Input Gear Part No. 5-P-721
(14) Input Gear Part No. 5-P-1395
(15) Input Gear Part No. 5-P-1100
(16) Input Gear Part No. 5-P-1101
(17) Input Gear Part No. 5-P-1135
(18) Input Gear Part No. 5-P-1102
(19) Input Gear Part No. 5-P-1103
(20) Input Gear Part No. 5-P-1385
(21) Input Gear Part No. 5-P-1104
(22) Input Gear Part No. 5-P-1105
(23) Input Gear Part No. 5-P-581
(24) Filler block furnished with P.T.O. but not required

January 2008

Parker Hannifin Corporation
Chelsea Products Division
Olive Branch, MS 38654 USA

AS125-9A	LAS135-9A	PS125-9A
AS135-9A	LAS140-9A	PS140-9A
AS140-9A	LAS145-9A	PS9-VPD
LAS115-9A	LPS125-9A	PS95-9A
LAS125-9A	LPS140-9A	

LEFT SIDE ONLY

TRANSMISSION GEAR DATA:
L.H. 8-Bolt Opening Gear FORWARD of Centerline

45 Teeth - SPUR

PITCH LINE TO APERTURE FACE:
.7300" (18.5420MM)

RIGHT SIDE ONLY

TRANSMISSION GEAR DATA:
R.H. 6-Bolt Opening Gear REAR of Centerline

45 Teeth - SPUR

PITCH LINE TO APERTURE FACE:
1.0750" (27.3050MM)

Caution: Application Approval Required for P.T.O. Output Shaft Speeds Above 2500 R.P.M.

GEARED ADAPTERS

LEFT Side P.T.O. Model	Inter. Torq.	Dir. Rot.	Engine % Hi	Engine % Rev	Filler Block	Adapter Assy.	Stud Kit	RIGHT Side P.T.O. Model	Inter. Torq.	Dir. Rot.	Engine % Hi	Engine % Rev	Filler Block	Adapter Assy.	Stud Kit
628XAHX-4AH					8-A-032		Furnished	626XAHX-4AH							Furnished
								630XAHX-4AH							Furnished
								645XAHX-4AH							Furnished

CAUTION: Do not use geared adapters with 442 "A" and "C" ratios.

CAUTION: 660/680 Series: Applications above 1500 RPM output shaft speed, contact Chelsea Technical Service for approval.

NOTE: The 100 Series will not mount on this transmission due to output shaft interference.

NOTE: The AK & XK output flanges can not be used with the "A" & "C" ratios on the 489 Series P.T.O.s due to mounting stud interference. Use a RA or RB rotatable flange for the XK and the RA for the AK flange.

NOTE: If Ordering the 230/231 Series with the Shaft Brake Option, order the "BA" Output for Automatic Transmissions and the "BD" Output for Manual Transmissions.

Parker Hannifin Corporation
Chelsea Products Division
Olive Branch, MS 38654 USA

ASO125-9A	LASO115-9A	LASO150-9A	PSO140-9A
ASO135-9A	LASO125-9A	LPSO125-9A	PSO150-9A
ASO140-9A	LASO135-9A	LPSO140-9A	PSO9-VPD
ASO145-9A	LASO140-9A	LPSO150-9A	PSO95-9
ASO150-9A	LASO145-9A	PSO125-9A	

LEFT SIDE ONLY

TRANSMISSION GEAR DATA:
L.H. 8-Bolt Opening Gear FORWARD of Centerline
45 Teeth - SPUR
PITCH LINE TO APERTURE FACE:
.7300" (18.5420MM)

RIGHT SIDE ONLY

TRANSMISSION GEAR DATA:
R.H. 6-Bolt Opening Gear REAR of Centerline
45 Teeth - SPUR
PITCH LINE TO APERTURE FACE:
1.0750" (27.3050MM)

Caution: Application Approval Required for P.T.O. Output Shaft Speeds Above 2500 R.P.M.

LEFT Side P.T.O. Model	Inter. Torq.	Dir. Rot.	Engine % Hi	Engine % Rev	Filler Block	Adapter Assy.	Stud Kit	RIGHT Side P.T.O. Model	Inter. Torq.	Dir. Rot.	Engine % Hi	Engine % Rev	Filler Block	Adapter Assy.	Stud Kit
ONE SPEED - SINGLE GEAR - MECHANICAL SHIFT															
812XKAHX-*3	400	Eng	103				Furnished								
ONE SPEED - TWO GEAR - MECHANICAL SHIFT															
221XCAHX-*5	250	Opp	69		7-A-062(P) 7-A-032 (1)	328481X	Furnished	221XCAHX-*4	250	Opp	69		7-A-062 7-A-032 (1)		Furnished
221XEAHX-*5	250	Opp	80			328481X	Furnished	221XEAHX-*4	250	Opp	80				Furnished
221XLAHX-*5	200	Opp	107			328481X	Furnished	221XLAHX-*4	200	Opp	107				Furnished
221XPAHX-*5	200	Opp	129			328481X	Furnished	221XPAHX-*4	200	Opp	129				Furnished
442XAAHX-*5 (2)	250	Opp	61			328481X	Furnished	442XFAHX-*4 (4)	250	Opp	96				Furnished
442XCAHX-*5 (3)	250	Opp	78			328481X	Furnished	442XHAHX-*4 (5)	250	Opp	111				Furnished
442XFAHX-*5 (4)	250	Opp	96			328481X	Furnished	442XLAHX-*4 (6)	250	Opp	124				Furnished
442XHAHX-*5 (5)	250	Opp	111			328481X	Furnished	442XQAHX-*4 (6)	225	Opp	134				Furnished
442XLAHX-*5 (6)	250	Opp	124			328481X	Furnished	442XRAHX-*4 (6)	225	Opp	155				Furnished
442XQAHX-*5 (6)	225	Opp	134			328481X	Furnished	442XSAHX-*4 (6)	200	Opp	184				Furnished
442XRAHX-*5 (6)	225	Opp	155			328481X	Furnished	442XUAHX-*4 (6)	195	Opp	220				Furnished
442XSAHX-*5 (6)	200	Opp	184			328481X	Furnished	442XWAHX-*4 (6)	175	Opp	258				Furnished
442XUAHX-*5 (6)	195	Opp	220			328481X	Furnished	442XXAHX-*4 (6)	140	Opp	306				Furnished
442XWAHX-*5 (6)	175	Opp	258			328481X	Furnished	660XFAHX-*4 (7)	375	Opp	96				Furnished
442XXAHX-*5 (6)	140	Opp	306			328481X	Furnished	660XQAHX-*4 (8)	375	Opp	134				Furnished
489XAAHX-*5 (2)	250	Opp	61				Furnished	660XSAHX-*4 (9)	325	Opp	184				Furnished
489XCAHX-*5 (3)	250	Opp	78				Furnished								
489XFAHX-*5 (4)	250	Opp	96				Furnished								
489XHAHX-*5 (5)	250	Opp	111				Furnished								
489XLAHX-*5 (6)	250	Opp	124				Furnished								
489XQAHX-*5 (6)	225	Opp	134				Furnished								
489XRAHX-*5 (6)	225	Opp	155				Furnished								
489XSAHX-*5 (6)	200	Opp	184				Furnished								
489XUAHX-*5 (6)	195	Opp	220				Furnished								
489XWAHX-*5 (6)	175	Opp	258				Furnished								
489XXAHX-*5 (6)	140	Opp	306				Furnished								
680XFAHX-*5 (7)	375	Opp	96				Furnished								
680XQAHX-*5 (8)	375	Opp	134				Furnished								
680XSAHX-*5 (9)	325	Opp	184				Furnished								
823XBAHX-*5 (10)	500	Opp	65				Furnished								
823XJAHX-*5 (11)	500	Opp	99				Furnished								

Continued Next Page

CAUTION: Do not use geared adapters with 442 "A" and "C" ratios.

CAUTION: 660/680 Series: Applications above 1500 RPM output shaft speed, contact Chelsea Technical Service for approval.

NOTE: The 100 Series will not mount on this transmission due to output shaft interference.

NOTE: The AK & XK output flanges can not be used with the "A" & "C" ratios on the 489 Series P.T.O.s due to mounting stud interference. Use a RA or RB rotatable flange for the XK and the RA for the AK flange.

NOTE: If Ordering the 230/231 Series with the Shaft Brake Option, order the "BA" Output for Automatic Transmissions and the "BD" Output for Manual Transmissions.

(1) Filler block furnished with P.T.O. but not required
(2) Input Gear Part No. 5-P-1280
(3) Input Gear Part No. 5-P-1287
(4) Input Gear Part No. 5-P-1077
(5) Input Gear Part No. 5-P-1364
(6) Input Gear Part No. 5-P-1004
(7) Input Gear Part No. 5-P-1242
(8) Input Gear Part No. 5-P-1246
(9) Input Gear Part No. 5-P-1322
(10) Input Gear Part No. 5-P-285
(11) Input Gear Part No. 5-P-325

January 2008

Parker Hannifin Corporation
Chelsea Products Division
Olive Branch, MS 38654 USA

ASO125-9A	LASO115-9A	LASO150-9A	PSO140-9A
ASO135-9A	LASO125-9A	LPSO125-9A	PSO150-9A
ASO140-9A	LASO135-9A	LPSO140-9A	PSO9-VPD
ASO145-9A	LASO140-9A	LPSO150-9A	PSO95-9
ASO150-9A	LASO145-9A	PSO125-9A	

LEFT SIDE ONLY

TRANSMISSION GEAR DATA:
L.H. 8-Bolt Opening Gear FORWARD of Centerline
45 Teeth - SPUR
PITCH LINE TO APERTURE FACE:
.7300" (18.5420MM)

RIGHT SIDE ONLY

TRANSMISSION GEAR DATA:
R.H. 6-Bolt Opening Gear REAR of Centerline
45 Teeth - SPUR
PITCH LINE TO APERTURE FACE:
1.0750" (27.3050MM)

Caution: Application Approval Required for P.T.O. Output Shaft Speeds Above 2500 R.P.M.

LEFT Side P.T.O. Model	Inter. Torq.	Dir. Rot.	Engine % Hi	Engine % Rev	Filler Block	Adapter Assy.	Stud Kit	RIGHT Side P.T.O. Model	Inter. Torq.	Dir. Rot.	Engine % Hi	Engine % Rev	Filler Block	Adapter Assy.	Stud Kit
ONE SPEED - TWO GEAR - MECHANICAL SHIFT															
823XMAHX-*5 (12)	500	Opp	116				Furnished								
823XRAHX-*5 (13)	400	Opp	160				Furnished								
823XTKTX-*5 (14)	350	Opp	194		8-A-165 (15)		Furnished								
880XBAHX-*5 (16)	500	Opp	65				Furnished								
880XDAHX-*5 (17)	500	Opp	77				Furnished								
880XGAHX-*5 (18)	500	Opp	84				Furnished								
880XJAHX-*5 (19)	500	Opp	99				Furnished								
880XMAHX-*5 (20)	500	Opp	116				Furnished								
880XQAHX-*5 (21)	450	Opp	136				Furnished								
880XRAHX-*5 (22)	400	Opp	160				Furnished								
880XTAHX-*5 (23)	350	Opp	206				Furnished								
ONE SPEED - TWO GEAR - POWERSHIFT (AIR)															
230XAAJX-*5	250	Opp	50		7-A-093(P)	328481X	Furnished	230XAAJX-*4	250	Opp	50		7-A-093		Furnished
230XBAJX-*5	250	Opp	66		7-A-093(P)	328481X	Furnished	230XBAJX-*4	250	Opp	66		7-A-093		Furnished
230XDAJX-*5	250	Opp	76		7-A-093(P)	328481X	Furnished	230XDAJX-*4	250	Opp	76		7-A-093		Furnished
230XKAJX-*5	250	Opp	103		7-A-093(P)	328481X	Furnished	230XKAJX-*4	250	Opp	103		7-A-093		Furnished
230XQAJX-*5	250	Opp	137		7-A-093(P)	328481X	Furnished	230XQAJX-*4	250	Opp	137		7-A-093		Furnished
230XUAJX-*5	225	Opp	219		7-A-093(P)	328481X	Furnished	230XUAJX-*4	225	Opp	219		7-A-093		Furnished
236XDAHX-*5 (6)	250	Opp	100			328481X	Furnished	236XDAHX-*4 (6)	250	Opp	100				Furnished
236XKAHX-*5 (6)	250	Opp	129			328481X	Furnished	236XKAHX-*4 (6)	250	Opp	129				Furnished
236XQAHX-*5 (6)	250	Opp	173			328481X	Furnished	236XQAHX-*4 (6)	250	Opp	173				Furnished
236XUAHX-*5 (6)	225	Opp	199			328481X	Furnished	236XUAHX-*4 (6)	225	Opp	199				Furnished
885XBAHX-*5 (16)	500	Opp	65				Furnished								
885XGAHX-*5 (18)	500	Opp	84				Furnished								
885XJAHX-*5 (19)	500	Opp	99				Furnished								
885XMAHX-*5 (20)	500	Opp	116				Furnished								
ONE SPEED - FORWARD & REVERSE															
340XFAHX-*5 (24)	200	Opp	84	88	7-A-140 (15)	328481X	Furnished	340XFAHX-*4 (24)	200	Opp	84	88	7-A-140 (15)		Furnished
352XSAHX-*5 (6)	140	Opp	187	242		328481X	Furnished	352XSAHX-*4 (6)	140	Opp	187	242			Furnished
863XBAHX-*5	500	Opp	65	81			Furnished								
ONE SPEED - DUAL SHAFT															
452XSAHX-*3 (6)	140	Opp	187			328481X	Furnished	452XSAHX-*6 (6)	140	Opp	187				Furnished

Continued Next Page

CAUTION: Do not use geared adapters with 442 "A" and "C" ratios.

CAUTION: 660/680 Series: Applications above 1500 RPM output shaft speed, contact Chelsea Technical Service for approval.

NOTE: The 100 Series will not mount on this transmission due to output shaft interference.

NOTE: The AK & XK output flanges can not be used with the "A" & "C" ratios on the 489 Series P.T.O.s due to mounting stud interference. Use a RA or RB rotatable flange for the XK and the RA for the AK flange.

NOTE: If Ordering the 230/231 Series with the Shaft Brake Option, order the "BA" Output for Automatic Transmissions and the "BD" Output for Manual Transmissions.

(6) Input Gear Part No. 5-P-1004
(12) Input Gear Part No. 5-P-283
(13) Input Gear Part No. 5-P-721
(14) Input Gear Part No. 5-P-1395
(15) Filler block furnished with P.T.O.
(16) Input Gear Part No. 5-P-1100
(17) Input Gear Part No. 5-P-1101
(18) Input Gear Part No. 5-P-1135
(19) Input Gear Part No. 5-P-1102
(20) Input Gear Part No. 5-P-1103
(21) Input Gear Part No. 5-P-1385
(22) Input Gear Part No. 5-P-1104
(23) Input Gear Part No. 5-P-1105
(24) Input Gear Part No. 5-P-581

January 2008

Parker Hannifin Corporation
Chelsea Products Division
Olive Branch, MS 38654 USA

ASO125-9A	LASO115-9A	LASO150-9A	PSO140-9A
ASO135-9A	LASO125-9A	LPSO125-9A	PSO150-9A
ASO140-9A	LASO135-9A	LPSO140-9A	PSO9-VPD
ASO145-9A	LASO140-9A	LPSO150-9A	PSO95-9
ASO150-9A	LASO145-9A	PSO125-9A	

LEFT SIDE ONLY

TRANSMISSION GEAR DATA:

L.H. 8-Bolt Opening Gear FORWARD of Centerline

45 Teeth - SPUR

PITCH LINE TO APERTURE FACE:

.7300" (18.5420MM)

RIGHT SIDE ONLY

TRANSMISSION GEAR DATA:

R.H. 6-Bolt Opening Gear REAR of Centerline

45 Teeth - SPUR

PITCH LINE TO APERTURE FACE:

1.0750" (27.3050MM)

Caution: Application Approval Required for P.T.O. Output Shaft Speeds Above 2500 R.P.M.

GEARED ADAPTERS

LEFT Side P.T.O. Model	Inter. Torq.	Dir. Rot.	Engine % Hi	Engine % Rev	Filler Block	Adapter Assy.	Stud Kit	RIGHT Side P.T.O. Model	Inter. Torq.	Dir. Rot.	Engine % Hi	Engine % Rev	Filler Block	Adapter Assy.	Stud Kit
628XAHX-4AH					8-A-032		Furnished	626XAHX-4AH							Furnished
								630XAHX-4AH							Furnished
								645XAHX-4AH							Furnished

CAUTION: Do not use geared adapters with 442 "A" and "C" ratios.

CAUTION: 660/680 Series: Applications above 1500 RPM output shaft speed, contact Chelsea Technical Service for approval.

NOTE: The 100 Series will not mount on this transmission due to output shaft interference.

NOTE: The AK & XK output flanges can not be used with the "A" & "C" ratios on the 489 Series P.T.O.s due to mounting stud interference. Use a RA or RB rotatable flange for the XK and the RA for the AK flange.

NOTE: If Ordering the 230/231 Series with the Shaft Brake Option, order the "BA" Output for Automatic Transmissions and the "BD" Output for Manual Transmissions.

ASO66-7B
ESO65-7A
ESO66-7B

LEFT SIDE ONLY

TRANSMISSION GEAR DATA:
L.H. 6-Bolt Opening Gear FORWARD of Centerline
34 Teeth - R.H. HELIX
PITCH LINE TO APERTURE FACE:
1.4110" (35.8300MM)

RIGHT SIDE ONLY

TRANSMISSION GEAR DATA:
R.H. 6-Bolt Opening Gear FORWARD of Centerline
34 Teeth - R.H. HELIX
PITCH LINE TO APERTURE FACE:
1.4110" (35.8300MM)

Caution: Application Approval Required for P.T.O. Output Shaft Speeds Above 2500 R.P.M.

LEFT Side P.T.O. Model	Inter. Torq.	Dir. Rot.	Engine % Hi	Engine % Rev	Filler Block	Adapter Assy.	Stud Kit	RIGHT Side P.T.O. Model	Inter. Torq.	Dir. Rot.	Engine % Hi	Engine % Rev	Filler Block	Adapter Assy.	Stud Kit
ONE SPEED - TWO GEAR - MECHANICAL SHIFT															
442LFFNX-*5 (1)	250	Opp	49				7170-96X	442LFFNX-*3 (1)	250	Opp	49				7170-96X
442LLFNX-*5 (2)	250	Opp	63				7170-96X	442LLFNX-*3 (2)	250	Opp	63				7170-96X
442LQFNX-*5 (2)	225	Opp	68				7170-96X	442LQFNX-*3 (2)	225	Opp	68				7170-96X
442LRFNX-*5 (2)	225	Opp	79				7170-96X	442LRFNX-*3 (2)	225	Opp	79				7170-96X
442LSFNX-*5 (2)	200	Opp	94				7170-96X	442LSFNX-*3 (2)	200	Opp	94				7170-96X
442LUFNX-*5 (2)	195	Opp	112				7170-96X	442LUFNX-*3 (2)	195	Opp	112				7170-96X
442LWFNX-*5 (2)	175	Opp	132				7170-96X	442LWFNX-*3 (2)	175	Opp	132				7170-96X
442LXFNX-*5 (2)	140	Opp	156				7170-96X	442LXFNX-*3 (2)	140	Opp	156				7170-96X
ONE SPEED - TWO GEAR - POWERSHIFT (AIR)															
236LDFNX-*5 (2)	250	Opp	51				7170-96X	236LDFNX-*3 (2)	250	Opp	51				7170-96X
236LKFNX-*5 (2)	250	Opp	66				7170-96X	236LKFNX-*3 (2)	250	Opp	66				7170-96X
236LQFNX-*5 (2)	250	Opp	89				7170-96X	236LQFNX-*3 (2)	250	Opp	89				7170-96X
236LUFNX-*5 (2)	225	Opp	101				7170-96X	236LUFNX-*3 (2)	225	Opp	101				7170-96X
ONE SPEED - FORWARD & REVERSE															
340ZFFNX-*5 (3)	200	Opp	45	40			7170-96X	340ZFFNX-*5 (3)	200	Opp	45	40			7170-96X
352ZSFNX-*5 (2)	140	Opp	95	123			7170-96X	352ZSFNX-*3 (2)	140	Opp	95	123			7170-96X
ONE SPEED - DUAL SHAFT															
452ZSFNX-*3 (2)	140	Opp	95				7170-96X	452ZSFNX-*3 (2)	140	Opp	95				7170-96X
GEARED ADAPTERS															
626ZFNX-4HR (2)		Eng			7-A-300		7170-4X	626ZFNX-3HR (2)		Eng			7-A-300		7170-4X
630ZFNX-4HR (2)		Eng			7-A-300		7170-4X	630ZFNX-3HR (2)		Eng			7-A-300		7170-4X
645ZFNX-4HR (2)		Eng			7-A-300		7170-4X	645ZFNX-3HR (2)		Eng			7-A-300(P)		7170-4X

NOTE: 100 Series will not mount on this transmission because the mounting depth of 1.411 is too deep.

NOTE: P.T.O.s with shiftable input gears cannot be mounted on this transmission because there is no tooth round on the transmission P.T.O. drive gear.

NOTE: The 626Z/630Z/645Z Series adapters can be mounted to the transmission using the same stud kit as the 442 Series listed on this page. The 5-P-1070 input gear must be used in the adapter and the 5-P-1201 input gear must be used in the 442 Series. The 442 Series mounts to the adapter with a 7-A-300 spacer and the 7170-4X stud kit. The deep mount 442Z can be mounted to the adapters by adding a 7-A-200 to the 7-A-300 spacer.

(1) Input Gear Part No. 5-P-1097
(2) Input Gear Part No. 5-P-1070
(3) Input Gear Part No. 5-P-931

Parker Hannifin Corporation
Chelsea Products Division
Olive Branch, MS 38654 USA

ES52-7A

ES52-7B

LEFT SIDE ONLY	RIGHT SIDE ONLY
TRANSMISSION GEAR DATA: L.H. 6-Bolt Opening Gear FORWARD of Centerline 34 Teeth - R.H. HELIX **PITCH LINE TO APERTURE FACE:** 1.4110" (35.8300MM)	**TRANSMISSION GEAR DATA:** R.H. 6-Bolt Opening Gear FORWARD of Centerline 34 Teeth - R.H. HELIX **PITCH LINE TO APERTURE FACE:** 1.4110" (35.8300MM)

Caution: Application Approval Required for P.T.O. Output Shaft Speeds Above 2500 R.P.M.

LEFT Side P.T.O. Model	Inter. Torq.	Dir. Rot.	Engine % Hi	Engine % Rev	Filler Block	Adapter Assy.	Stud Kit	RIGHT Side P.T.O. Model	Inter. Torq.	Dir. Rot.	Engine % Hi	Engine % Rev	Filler Block	Adapter Assy.	Stud Kit
ONE SPEED - TWO GEAR - MECHANICAL SHIFT															
442ZFFNX-*5 (1)	250	Opp	36				Furnished	442ZFFNX-*3 (1)	250	Opp	36				Furnished
442ZLFNX-*5 (2)	250	Opp	47				Furnished	442ZLFNX-*3 (2)	250	Opp	47				Furnished
442ZQFNX-*5 (2)	225	Opp	51				Furnished	442ZQFNX-*3 (2)	225	Opp	51				Furnished
442ZRFNX-*5 (2)	225	Opp	58				Furnished	442ZRFNX-*3 (2)	225	Opp	58				Furnished
442ZSFNX-*5 (2)	200	Opp	70				Furnished	442ZSFNX-*3 (2)	200	Opp	70				Furnished
442ZUFNX-*5 (2)	195	Opp	83				Furnished	442ZUFNX-*3 (2)	195	Opp	83				Furnished
442ZWFNX-*5 (2)	175	Opp	98				Furnished	442ZWFNX-*3 (2)	175	Opp	98				Furnished
442ZXFNX-*5 (2)	140	Opp	115				Furnished	442ZXFNX-*3 (2)	140	Opp	115				Furnished
ONE SPEED - TWO GEAR - POWERSHIFT (AIR)															
236ZDFNX-*5 (2)	250	Opp	38				Furnished	236ZDFNX-*3 (2)	250	Opp	38				Furnished
236ZKFNX-*5 (2)	250	Opp	48				Furnished	236ZKFNX-*3 (2)	250	Opp	48				Furnished
236ZQFNX-*5 (2)	250	Opp	66				Furnished	236ZQFNX-*3 (2)	250	Opp	66				Furnished
236ZUFNX-*5 (2)	225	Opp	75				Furnished	236ZUFNX-*3 (2)	225	Opp	75				Furnished
ONE SPEED - FORWARD & REVERSE															
340ZFFNX-*5 (3)	200	Opp	33	30			Furnished	340ZFFNX-*5 (3)	200	Opp	33	30			Furnished
352ZSFNX-*5 (2)	140	Opp	71	91			Furnished	352ZSFNX-*3 (2)	140	Opp	71	91			Furnished
ONE SPEED - DUAL SHAFT															
452ZSFNX-*3 (2)	140	Opp	71				Furnished	452ZSFNX-*3 (2)	140	Opp	71				Furnished
GEARED ADAPTERS															
626ZFNX-4HR (2)		Eng			7-A-300		7170-4X	626ZFNX-3HR (2)		Eng			7-A-300		7170-4X
630ZFNX-4HR (2)		Eng			7-A-300		7170-4X	630ZFNX-3HR (2)		Eng			7-A-300		7170-4X
645ZFNX-4HR (2)		Eng			7-A-300		7170-4X	645ZFNX-3HR (2)		Eng			7-A-300		7170-4X

NOTE: 100 Series will not mount on this transmission because the mounting depth of 1.411" is too deep.

NOTE: P.T.O.s with shiftable input gears cannot be mounted on this transmission because there is no tooth round on the transmission P.T.O. drive gear.

NOTE: The 626Z/630Z/645Z Series adapters can be mounted to the transmission using the same stud kit as the 442 Series listed on this page. The 5-P-1070 input gear must be used in the adapter and the 5-P-1201 input gear must be used in the 442 Series. The 442 Series mounts to the adapter with a 7-A-300 spacer and the 7170-4X stud kit. The deep mount 442Z can be mounted to the adapters by adding a 7-A-200 to the 7-A-300 spacer.

(1) Input Gear Part No. 5-P-1097
(2) Input Gear Part No. 5-P-1070
(3) Input Gear Part No. 5-P-931

Parker Chelsea

Parker Hannifin Corporation
Chelsea Products Division
Olive Branch, MS 38654 USA

ASO10-ESP	ASO150-10S	LASO150-10S	LLPSO125-10S	LPSO125-10S	PSO10-VPD	PSO140-10S	PSO165-10S
ASO10-VP10	ASO160-10S	LLASO125-10S	LLPSO140-10S	LPSO140-10S	PSO100-10S	PSO145-10V	PSX150-9S
ASO100-10S	ASO165-10S	LLASO140-10S	LLPSO150-10S	LPSO150-10S	PSO115-10V	PSO145-9R	
ASO125-10S	LASO125-10S	LLASO150-10S	LLPSO165-10S	LPSO165-10S	PSO125-10S	PSO150-10S	
ASO140-10S	LASO140-10S	LLPSO100-10S	LPSO100-10S	PSO10-ESP	PSO125-10V	PSO160-10S	

LEFT SIDE ONLY

TRANSMISSION GEAR DATA:
L.H. 8-Bolt Opening Gear FORWARD of Centerline
45 Teeth - SPUR
PITCH LINE TO APERTURE FACE:
.7300" (18.5420MM)

RIGHT SIDE ONLY

TRANSMISSION GEAR DATA:
R.H. 6-Bolt Opening Gear REAR of Centerline
45 Teeth - SPUR
PITCH LINE TO APERTURE FACE:
1.0750" (27.3050MM)

Caution: Application Approval Required for P.T.O. Output Shaft Speeds Above 2500 R.P.M.

LEFT Side P.T.O. Model	Inter. Torq.	Dir. Rot.	Engine % Hi	Engine % Rev	Filler Block	Adapter Assy.	Stud Kit	RIGHT Side P.T.O. Model	Inter. Torq.	Dir. Rot.	Engine % Hi	Engine % Rev	Filler Block	Adapter Assy.	Stud Kit
ONE SPEED - SINGLE GEAR - MECHANICAL SHIFT															
812XKAHX-*3	400	Eng	106				Furnished								
ONE SPEED - TWO GEAR - MECHANICAL SHIFT															
221XCAHX-*5	250	Opp	71		7-A-062 7-A-032 (1)	328481X	Furnished	221XCAHX-*4	250	Opp	71		7-A-062 7-A-032 (1)		Furnished
221XEAHX-*5	250	Opp	82			328481X	Furnished	221XEAHX-*4	250	Opp	82				Furnished
221XLAHX-*5	200	Opp	110			328481X	Furnished	221XLAHX-*4	200	Opp	110				Furnished
221XPAHX-*5	200	Opp	133			328481X	Furnished	221XPAHX-*4	200	Opp	133				Furnished
442XAAHX-*5 (2)	250	Opp	62			328481X	Furnished	442XFAHX-*4 (4)	250	Opp	98				Furnished
442XCAHX-*5 (3)	250	Opp	80			328481X	Furnished	442XHAHX-*4 (5)	250	Opp	114				Furnished
442XFAHX-*5 (4)	250	Opp	98			328481X	Furnished	442XLAHX-*4 (6)	250	Opp	127				Furnished
442XHAHX-*5 (5)	250	Opp	114			328481X	Furnished	442XQAHX-*4 (6)	225	Opp	137				Furnished
442XLAHX-*5 (6)	250	Opp	127			328481X	Furnished	442XRAHX-*4 (6)	225	Opp	159				Furnished
442XQAHX-*5 (6)	225	Opp	137			328481X	Furnished	442XSAHX-*4 (6)	200	Opp	189				Furnished
442XRAHX-*5 (6)	225	Opp	159			328481X	Furnished	442XUAHX-*4 (6)	195	Opp	225				Furnished
442XSAHX-*5 (6)	200	Opp	189			328481X	Furnished	442XWAHX-*4 (6)	175	Opp	265				Furnished
442XUAHX-*5 (6)	195	Opp	225			328481X	Furnished	442XXAHX-*4 (6)	140	Opp	313				Furnished
442XWAHX-*5 (6)	175	Opp	265			328481X	Furnished	660XFAHX-*4 (7)	375	Opp	98				Furnished
442XXAHX-*5 (6)	140	Opp	313			328481X	Furnished	660XQAHX-*4 (8)	375	Opp	137				Furnished
489XAAHX-*5 (2)	250	Opp	62				Furnished	660XSAHX-*4 (9)	325	Opp	189				Furnished
489XCAHX-*5 (3)	250	Opp	80				Furnished								
489XFAHX-*5 (4)	250	Opp	98				Furnished								
489XHAHX-*5 (5)	250	Opp	114				Furnished								
489XLAHX-*5 (6)	250	Opp	127				Furnished								
489XQAHX-*5 (6)	225	Opp	137				Furnished								
489XRAHX-*5 (6)	225	Opp	159				Furnished								
489XSAHX-*5 (6)	200	Opp	189				Furnished								
489XUAHX-*5 (6)	195	Opp	225				Furnished								
489XWAHX-*5 (6)	175	Opp	265				Furnished								
489XXAHX-*5 (6)	140	Opp	313				Furnished								
680XFAHX-*5 (7)	375	Opp	98				Furnished								
680XQAHX-*5 (8)	375	Opp	137				Furnished								
680XSAHX-*5 (9)	325	Opp	189				Furnished								
823XBAHX-*5 (10)	500	Opp	67				Furnished								
823XJAHX-*5 (11)	500	Opp	101				Furnished								

Continued Next Page

CAUTION: Do not use geared adapters with 442 "A" and "C" ratios.

CAUTION: 660/680 Series: Applications above 1500 RPM out put shaft speed, contact Chelsea Technical Service for approval.

NOTE: 100 Series will not mount on this transmission because the output shaft hits the transmission housing.

NOTE: The AK & XK output flanges can not be used with the "A" & "C" ratios on the 489 Series P.T.O.s due to mounting stud interference. Use a RA or RB rotatable flange for the XK and the RA for the AK flange.

NOTE: If Ordering the 230/231 Series with the Shaft Brake Option, order the "BA" Output for Automatic Transmissions and the "BD" Output for Manual Transmissions.

(1) Filler block furnished with P.T.O. but not required
(2) Input Gear Part No. 5-P-1280
(3) Input Gear Part No. 5-P-1287
(4) Input Gear Part No. 5-P-1077
(5) Input Gear Part No. 5-P-1364
(6) Input Gear Part No. 5-P-1004
(7) Input Gear Part No. 5-P-1242
(8) Input Gear Part No. 5-P-1246
(9) Input Gear Part No. 5-P-1322
(10) Input Gear Part No. 5-P-285
(11) Input Gear Part No. 5-P-325

January 2008

Parker Chelsea
Parker Hannifin Corporation
Chelsea Products Division
Olive Branch, MS 38654 USA

ASO10-ESP	ASO150-10S	LASO150-10S	LLPSO125-10S	LPSO125-10S	PSO10-VPD	PSO140-10S	PSO165-10S
ASO10-VP10	ASO160-10S	LLASO125-10S	LLPSO140-10S	LPSO140-10S	PSO100-10S	PSO145-10V	PSX150-9S
ASO100-10S	ASO165-10S	LLASO140-10S	LLPSO150-10S	LPSO150-10S	PSO115-10V	PSO145-9R	
ASO125-10S	LASO125-10S	LLASO150-10S	LLPSO165-10S	LPSO165-10S	PSO125-10S	PSO150-10S	
ASO140-10S	LASO140-10S	LLPSO100-10S	LPSO100-10S	PSO10-ESP	PSO125-10V	PSO160-10S	

LEFT SIDE ONLY

TRANSMISSION GEAR DATA:
L.H. 8-Bolt Opening Gear FORWARD of Centerline
45 Teeth - SPUR

PITCH LINE TO APERTURE FACE:
.7300" (18.5420MM)

RIGHT SIDE ONLY

TRANSMISSION GEAR DATA:
R.H. 6-Bolt Opening Gear REAR of Centerline
45 Teeth - SPUR

PITCH LINE TO APERTURE FACE:
1.0750" (27.3050MM)

Caution: Application Approval Required for P.T.O. Output Shaft Speeds Above 2500 R.P.M.

LEFT Side P.T.O. Model	Inter. Torq.	Dir. Rot.	Engine % Hi	Engine % Rev	Filler Block	Adapter Assy.	Stud Kit	RIGHT Side P.T.O. Model	Inter. Torq.	Dir. Rot.	Engine % Hi	Engine % Rev	Filler Block	Adapter Assy.	Stud Kit
ONE SPEED - TWO GEAR - MECHANICAL SHIFT															
823XMAHX-*5 (12)	500	Opp	119				Furnished								
823XRAHX-*5 (13)	400	Opp	164				Furnished								
823XTKTX-*5 (14)	350	Opp	199		8-A-165 (15)		Furnished								
880XBAHX-*5 (16)	500	Opp	67				Furnished								
880XDAHX-*5 (17)	500	Opp	79				Furnished								
880XGAHX-*5 (18)	500	Opp	86				Furnished								
880XJAHX-*5 (19)	500	Opp	101				Furnished								
880XMAHX-*5 (20)	500	Opp	119				Furnished								
880XQAHX-*5 (21)	450	Opp	139				Furnished								
880XRAHX-*5 (22)	400	Opp	164				Furnished								
880XTAHX-*5 (23)	350	Opp	212				Furnished								
ONE SPEED - TWO GEAR - POWERSHIFT (AIR)															
230XAAJX-*5	250	Opp	52		7-A-093	328481X	Furnished	230XAAJX-*4	250	Opp	52		7-A-093		Furnished
230XBAJX-*5	250	Opp	67		7-A-093	328481X	Furnished	230XBAJX-*4	250	Opp	67		7-A-093		Furnished
230XDAJX-*5	250	Opp	78		7-A-093	328481X	Furnished	230XDAJX-*4	250	Opp	78		7-A-093		Furnished
230XKAJX-*5	250	Opp	105		7-A-093	328481X	Furnished	230XKAJX-*4	250	Opp	105		7-A-093		Furnished
230XQAJX-*5	250	Opp	140		7-A-093	328481X	Furnished	230XQAJX-*4	250	Opp	140		7-A-093		Furnished
230XUAJX-*5	225	Opp	224		7-A-093	328481X	Furnished	230XUAJX-*4	225	Opp	224		7-A-093		Furnished
236XDAHX-*5 (6)	250	Opp	103			328481X	Furnished	236XDAHX-*4 (6)	250	Opp	103				Furnished
236XKAHX-*5 (6)	250	Opp	132			328481X	Furnished	236XKAHX-*4 (6)	250	Opp	132				Furnished
236XQAHX-*5 (6)	250	Opp	178			328481X	Furnished	236XQAHX-*4 (6)	250	Opp	178				Furnished
236XUAHX-*5 (6)	225	Opp	204			328481X	Furnished	236XUAHX-*4 (6)	225	Opp	204				Furnished
885XBAHX-*5 (16)	500	Opp	67				Furnished								
885XGAHX-*5 (18)	500	Opp	86				Furnished								
885XJAHX-*5 (19)	500	Opp	101				Furnished								
885XMAHX-*5 (20)	500	Opp	119				Furnished								
ONE SPEED - FORWARD & REVERSE															
340XFAHX-*5 (24)	200	Opp	86	90	7-A-140 (15)	328481X	Furnished	340XFAHX-*4 (24)	200	Opp	86	90	7-A-140 (15)		Furnished
352XSAHX-*5 (6)	140	Opp	191	248		328481X	Furnished	352XSAHX-*4 (6)	140	Opp	191	248			Furnished
863XBAHX-*5	500	Opp	67	83			Furnished								
ONE SPEED - DUAL SHAFT															
452XSAHX-*5 (6)	140	Opp	191			328481X	Furnished	452XSAHX-*4 (6)	140	Opp	191				Furnished

Continued Next Page

CAUTION: Do not use geared adapters with 442 "A" and "C" ratios.

CAUTION: 660/680 Series: Applications above 1500 RPM out put shaft speed, contact Chelsea Technical Service for approval.

NOTE: 100 Series will not mount on this transmission because the output shaft hits the transmission housing.

NOTE: The AK & XK output flanges can not be used with the "A" & "C" ratios on the 489 Series P.T.O.s due to mounting stud interference. Use a RA or RB rotatable flange for the XK and the RA for the AK flange.

NOTE: If Ordering the 230/231 Series with the Shaft Brake Option, order the "BA" Output for Automatic Transmissions and the "BD" Output for Manual Transmissions.

(6) Input Gear Part No. 5-P-1004
(12) Input Gear Part No. 5-P-283
(13) Input Gear Part No. 5-P-721
(14) Input Gear Part No. 5-P-1395
(15) Filler block furnished with P.T.O.
(16) Input Gear Part No. 5-P-1100
(17) Input Gear Part No. 5-P-1101
(18) Input Gear Part No. 5-P-1135
(19) Input Gear Part No. 5-P-1102
(20) Input Gear Part No. 5-P-1103
(21) Input Gear Part No. 5-P-1385
(22) Input Gear Part No. 5-P-1104
(23) Input Gear Part No. 5-P-1105
(24) Input Gear Part No. 5-P-581

January 2008

Parker Hannifin Corporation
Chelsea Products Division
Olive Branch, MS 38654 USA

ASO10-ESP	ASO150-10S	LASO150-10S	LLPSO125-10S	LPSO125-10S	PSO10-VPD	PSO140-10S	PSO165-10S
ASO10-VP10	ASO160-10S	LLASO125-10S	LLPSO140-10S	LPSO140-10S	PSO100-10S	PSO145-10V	PSX150-9S
ASO100-10S	ASO165-10S	LLASO140-10S	LLPSO150-10S	LPSO150-10S	PSO115-10V	PSO145-9R	
ASO125-10S	LASO125-10S	LLASO150-10S	LLPSO165-10S	LPSO165-10S	PSO125-10S	PSO150-10S	
ASO140-10S	LASO140-10S	LLPSO100-10S	LPSO100-10S	PSO10-ESP	PSO125-10V	PSO160-10S	

LEFT SIDE ONLY

TRANSMISSION GEAR DATA:

L.H. 8-Bolt Opening Gear FORWARD of Centerline

45 Teeth - SPUR

PITCH LINE TO APERTURE FACE:

.7300" (18.5420MM)

RIGHT SIDE ONLY

TRANSMISSION GEAR DATA:

R.H. 6-Bolt Opening Gear REAR of Centerline

45 Teeth - SPUR

PITCH LINE TO APERTURE FACE:

1.0750" (27.3050MM)

Caution: Application Approval Required for P.T.O. Output Shaft Speeds Above 2500 R.P.M.

GEARED ADAPTERS

LEFT Side P.T.O. Model	Inter. Torq.	Dir. Rot.	Engine % Hi	Engine % Rev	Filler Block	Adapter Assy.	Stud Kit	RIGHT Side P.T.O. Model	Inter. Torq.	Dir. Rot.	Engine % Hi	Engine % Rev	Filler Block	Adapter Assy.	Stud Kit
628XAHX-4AH					8-A-032		Furnished	626XAHX-4AH							Furnished
								630XAHX-4AH							Furnished
								645XAHX-4AH							Furnished

CAUTION: Do not use geared adapters with 442 "A" and "C" ratios.

CAUTION: 660/680 Series: Applications above 1500 RPM out put shaft speed, contact Chelsea Technical Service for approval.

NOTE: 100 Series will not mount on this transmission because the output shaft hits the transmission housing.

NOTE: The AK & XK output flanges can not be used with the "A" & "C" ratios on the 489 Series P.T.O.s due to mounting stud interference. Use a RA or RB rotatable flange for the XK and the RA for the AK flange.

NOTE: If Ordering the 230/231 Series with the Shaft Brake Option, order the "BA" Output for Automatic Transmissions and the "BD" Output for Manual Transmissions.

Parker Hannifin Corporation
Chelsea Products Division
Olive Branch, MS 38654 USA

PSO150-16A

BOTTOM SIDE ONLY

TRANSMISSION GEAR DATA:

BOT 8-Bolt Opening Gear FORWARD of Centerline

54 Teeth - SPUR

PITCH LINE TO APERTURE FACE:

.5660" (14.3761MM)

RIGHT SIDE ONLY

TRANSMISSION GEAR DATA:

R.H. 6-Bolt Opening Gear FORWARD of Centerline

54 Teeth - SPUR

PITCH LINE TO APERTURE FACE:

.7210" (18.3134MM)

Caution: Application Approval Required for P.T.O. Output Shaft Speeds Above 2500 R.P.M.

BOTTOM Side P.T.O. Model	Inter. Torq.	Dir. Rot.	Engine % Hi	Engine % Rev	Filler Block	Adapter Assy.	Stud Kit	RIGHT Side P.T.O. Model	Inter. Torq.	Dir. Rot.	Engine % Hi	Engine % Rev	Filler Block	Adapter Assy.	Stud Kit
ONE SPEED - SINGLE GEAR - MECHANICAL SHIFT															
100XRAHX-*3 (1)	125	Eng	108			328564X	Furnished	100XRAHX-*3 (1)	125	Eng	108		7-A-300		328291-3X
812XKAHX-*5	400	Eng	72		8-A-165		Furnished								
ONE SPEED - TWO GEAR - MECHANICAL SHIFT															
221XCAHX-*5	250	Opp	48		7-A-032 (2)	328564X	Furnished	221XCAHX-*3	250	Opp	48		7-A-350 7-A-032 (2)		328170-35X
221XEAHX-*5	250	Opp	56		7-A-062	310778X	Furnished	221XEAHX-*3	250	Opp	56		7-A-300		328170-35X
221XLAHX-*5	200	Opp	75		7-A-062	310778X	Furnished	221XLAHX-*3	200	Opp	75		7-A-300		328170-35X
221XPAHX-*5	200	Opp	90		7-A-062	310778X	Furnished	221XPAHX-*3	200	Opp	90		7-A-300		328170-35X
442XAAHX-*5 (3)	250	Opp	42		7-A-062	310778X	Furnished	442KAAHX-*3 (3)	250	Opp	42		7-A-300		7170-5X
442XCAHX-*5 (4)	250	Opp	54		7-A-062	310778X	Furnished	442KCAHX-*3 (4)	250	Opp	54		7-A-300		7170-5X
442XFAHX-*5 (5)	250	Opp	67		7-A-062	310778X	Furnished	442KFAHX-*3 (5)	250	Opp	67		7-A-300		7170-5X
442XHAHX-*5 (6)	250	Opp	78		7-A-062	310778X	Furnished	442KHAHX-*3 (6)	250	Opp	78		7-A-300		7170-5X
442XLAHX-*5 (7)	250	Opp	87		7-A-062	310778X	Furnished	442KLAHX-*3 (7)	250	Opp	87		7-A-300		7170-5X
442XQAHX-*5 (7)	225	Opp	93		7-A-062	310778X	Furnished	442KQAHX-*3 (7)	225	Opp	93		7-A-300		7170-5X
442XRAHX-*5 (7)	225	Opp	108		7-A-062	310778X	Furnished	442KRAHX-*3 (7)	225	Opp	108		7-A-300		7170-5X
442XSAHX-*5 (7)	200	Opp	129		7-A-062	310778X	Furnished	442KSAHX-*3 (7)	200	Opp	129		7-A-300		7170-5X
442XUAHX-*5 (7)	195	Opp	153		7-A-062	310778X	Furnished	442KUAHX-*3 (7)	195	Opp	153		7-A-300		7170-5X
442XWAHX-*5 (7)	175	Opp	181		7-A-062	310778X	Furnished	442KWAHX-*3 (7)	175	Opp	181		7-A-300		7170-5X
442XXAHX-*5 (7)	140	Opp	214		7-A-062	310778X	Furnished	442KXAHX-*3 (7)	140	Opp	214		7-A-300		7170-5X
489KFAHX-*5 (5)	250	Opp	67		8-A-062 8-A-093		328170-8X	660KFAHX-*3 (8)	375	Opp	67		7-A-300		7170-5X
489KHAHX-*5 (6)	250	Opp	78		8-A-062 8-A-093		328170-8X	660KQAHX-*3 (9)	375	Opp	93		7-A-300		7170-5X
489KLAHX-*5 (7)	250	Opp	87		8-A-062 8-A-093		328170-8X	660KSAHX-*3 (10)	325	Opp	129		7-A-300		7170-5X
489KQAHX-*5 (7)	225	Opp	93		8-A-062 8-A-093		328170-8X								
489KRAHX-*5 (7)	225	Opp	108		8-A-062 8-A-093		328170-8X								
489KSAHX-*5 (7)	200	Opp	129		8-A-062 8-A-093		328170-8X								
489KUAHX-*5 (7)	195	Opp	153		8-A-062 8-A-093		328170-8X								
489KWAHX-*5 (7)	175	Opp	181		8-A-062 8-A-093		328170-8X								

Continued Next Page

CAUTION: Do not use geared adapters with 442 "A" and "C" ratios.

CAUTION: 660/680 Series: Applications above 1500 RPM output shaft speed, contact Chelsea Technical Service for approval.

NOTE: P.T.O. speeds shown are with transmision in LOW or, hand valve in positions 1 & 3. For speeds in HIGH or positions 2 & 4 multiply speeds shown by 1.1875.

NOTE: If Ordering the 230/231 Series with the Shaft Brake Option, order the "BA" Output for Automatic Transmissions and the "BD" Output for Manual Transmissions.

(1) Gear and Shaft Kit No. KXA-2-P-565
(2) Filler block furnished with P.T.O. but not required
(3) Input Gear Part No. 5-P-1280
(4) Input Gear Part No. 5-P-1287
(5) Input Gear Part No. 5-P-1077
(6) Input Gear Part No. 5-P-1364
(7) Input Gear Part No. 5-P-1004
(8) Input Gear Part No. 5-P-1242
(9) Input Gear Part No. 5-P-1246
(10) Input Gear Part No. 5-P-1322

PSO150-16A

BOTTOM SIDE ONLY

TRANSMISSION GEAR DATA:
BOT 8-Bolt Opening Gear FORWARD of Centerline
54 Teeth - SPUR

PITCH LINE TO APERTURE FACE:
.5660" (14.3761MM)

RIGHT SIDE ONLY

TRANSMISSION GEAR DATA:
R.H. 6-Bolt Opening Gear FORWARD of Centerline
54 Teeth - SPUR

PITCH LINE TO APERTURE FACE:
.7210" (18.3134MM)

Caution: Application Approval Required for P.T.O. Output Shaft Speeds Above 2500 R.P.M.

BOTTOM Side P.T.O. Model	Inter. Torq.	Dir. Rot.	Engine % Hi	Engine % Rev	Filler Block	Adapter Assy.	Stud Kit	RIGHT Side P.T.O. Model	Inter. Torq.	Dir. Rot.	Engine % Hi	Engine % Rev	Filler Block	Adapter Assy.	Stud Kit
ONE SPEED - TWO GEAR - MECHANICAL SHIFT															
489KXAHX-*5 (7)	140	Opp	214		8-A-062 8-A-093		328170-8X								
680KFAHX-*5 (8)	375	Opp	67		8-A-062 8-A-093		328170-8X								
680KQAHX-*5 (9)	375	Opp	93		8-A-062 8-A-093		328170-8X								
680KSAHX-*5 (10)	325	Opp	129		8-A-062 8-A-093		328170-8X								
823XBAHX-*5 (11)	500	Opp	46		8-A-165		328170-14X								
823XJAHX-*5 (12)	500	Opp	69		8-A-165		328170-14X								
823XMAHX-*5 (13)	500	Opp	81		8-A-165		328170-14X								
823XRAHX-*5 (14)	400	Opp	112		8-A-165		328170-14X								
880XBAHX-*5 (15)	500	Opp	46		8-A-165		328170-14X								
880XDAHX-*5 (16)	500	Opp	54		8-A-165		328170-14X								
880XGAHX-*5 (17)	500	Opp	59		8-A-165		328170-14X								
880XJAHX-*5 (18)	500	Opp	69		8-A-165		328170-14X								
880XMAHX-*5 (19)	500	Opp	81		8-A-165		328170-14X								
880XQAHX-*5 (20)	450	Opp	95		8-A-165		328170-14X								
880XRAHX-*5 (21)	400	Opp	112		8-A-165		328170-14X								
880XTAHX-*5 (22)	350	Opp	144		8-A-165		328170-14X								
ONE SPEED - TWO GEAR - POWERSHIFT (AIR)															
230XAAJX-*3	250	Opp	35			328564X	Furnished	230XAAJX-*3	250	Opp	35		7-A-300		328170-172X
230XBAJX-*3	250	Opp	46			328564X	Furnished	230XBAJX-*3	250	Opp	46		7-A-300		328170-172X
230XDAJX-*3	250	Opp	53			328564X	Furnished	230XDAJX-*3	250	Opp	53		7-A-300		328170-172X
230XKAJX-*3	250	Opp	72			328564X	Furnished	230XKAJX-*3	250	Opp	72		7-A-300		328170-172X
230XQAJX-*3	250	Opp	95			328564X	Furnished	230XQAJX-*3	250	Opp	95		7-A-300		328170-172X
230XUAJX-*3	225	Opp	153			328564X	Furnished	230XUAJX-*3	225	Opp	153		7-A-300		328170-172X
236XDAHX-*5 (7)	250	Opp	70		7-A-062	310778X	Furnished	236KDAHX-*3 (7)	250	Opp	70		7-A-300		7170-5X
236XKAHX-*5 (7)	250	Opp	90		7-A-062	310778X	Furnished	236KKAHX-*3 (7)	250	Opp	90		7-A-300		7170-5X
236XQAHX-*5 (7)	250	Opp	122		7-A-062	310778X	Furnished	236KQAHX-*3 (7)	250	Opp	122		7-A-300		7170-5X
236XUAHX-*5 (7)	225	Opp	139		7-A-062	310778X	Furnished	236KUAHX-*3 (7)	225	Opp	139		7-A-300		7170-5X
885XBAHX-*5 (15)	500	Opp	46		8-A-165		328170-14X								
885XGAHX-*5 (17)	500	Opp	59		8-A-165		328170-14X								
885XJAHX-*5 (18)	500	Opp	69		8-A-165		328170-14X								
885XMAHX-*5 (19)	500	Opp	81		8-A-165		328170-14X								

Continued Next Page

CAUTION: Do not use geared adapters with 442 "A" and "C" ratios.

CAUTION: 660/680 Series: Applications above 1500 RPM output shaft speed, contact Chelsea Technical Service for approval.

NOTE: P.T.O. speeds shown are with transmision in LOW or, hand valve in positions 1 & 3. For speeds in HIGH or positions 2 & 4 multiply speeds shown by 1.1875.

NOTE: If Ordering the 230/231 Series with the Shaft Brake Option, order the "BA" Output for Automatic Transmissions and the "BD" Output for Manual Transmissions.

(7) Input Gear Part No. 5-P-1004
(8) Input Gear Part No. 5-P-1242
(9) Input Gear Part No. 5-P-1246
(10) Input Gear Part No. 5-P-1322
(11) Input Gear Part No. 5-P-285
(12) Input Gear Part No. 5-P-325
(13) Input Gear Part No. 5-P-283
(14) Input Gear Part No. 5-P-721
(15) Input Gear Part No. 5-P-1100
(16) Input Gear Part No. 5-P-1101
(17) Input Gear Part No. 5-P-1135
(18) Input Gear Part No. 5-P-1102
(19) Input Gear Part No. 5-P-1103
(20) Input Gear Part No. 5-P-1385
(21) Input Gear Part No. 5-P-1104
(22) Input Gear Part No. 5-P-1105

June 2008

Parker Chelsea
Parker Hannifin Corporation
Chelsea Products Division
Olive Branch, MS 38654 USA

PSO150-16A

BOTTOM SIDE ONLY

TRANSMISSION GEAR DATA:
BOT 8-Bolt Opening Gear FORWARD of Centerline
54 Teeth - SPUR

PITCH LINE TO APERTURE FACE:
.5660" (14.3761MM)

RIGHT SIDE ONLY

TRANSMISSION GEAR DATA:
R.H. 6-Bolt Opening Gear FORWARD of Centerline
54 Teeth - SPUR

PITCH LINE TO APERTURE FACE:
.7210" (18.3134MM)

Caution: Application Approval Required for P.T.O. Output Shaft Speeds Above 2500 R.P.M.

BOTTOM Side P.T.O. Model	Inter. Torq.	Dir. Rot.	Engine % Hi	Engine % Rev	Filler Block	Adapter Assy.	Stud Kit	RIGHT Side P.T.O. Model	Inter. Torq.	Dir. Rot.	Engine % Hi	Engine % Rev	Filler Block	Adapter Assy.	Stud Kit
ONE SPEED - FORWARD & REVERSE															
340SFAHX-*5 (23)	200	Opp	59	61	7-A-140 (24)	328564X	328170-94X	340SFAHX-*5 (23)	200	Opp	59	61	7-A-270 7-A-140 (24)		7170-5X
352XSAHX-*5 (7)	140	Opp	130	169	7-A-062	310778X	Furnished	352XSAHX-*3 (7)	140	Opp	130	169	7-A-300		7170-5X
863XBAHX-*5	500	Opp	46	57	8-A-165		328170-14X								
ONE SPEED - DUAL SHAFT															
452XSAHX-*3 (7)	140	Opp	130		7-A-062	310778X	Furnished	452XSAHX-*3 (7)	140	Opp	130		7-A-300		7170-5X
GEARED ADAPTERS															
								626KAHX-3AH					7-A-300		7170-5X
								630KAHX-3AH					7-A-300		7170-5X
								645KAHX-3AH					7-A-300		7170-5X

CAUTION: Do not use geared adapters with 442 "A" and "C" ratios.

CAUTION: 660/680 Series: Applications above 1500 RPM output shaft speed, contact Chelsea Technical Service for approval.

NOTE: P.T.O. speeds shown are with transmision in LOW or, hand valve in positions 1 & 3. For speeds in HIGH or positions 2 & 4 multiply speeds shown by 1.1875.

NOTE: If Ordering the 230/231 Series with the Shaft Brake Option, order the "BA" Output for Automatic Transmissions and the "BD" Output for Manual Transmissions.

(7) Input Gear Part No. 5-P-1004
(23) Input Gear Part No. 5-P-581
(24) Filler block furnished with P.T.O.

PSO150-16B
PSO175-16B
PSO175-16M

BOTTOM SIDE ONLY	RIGHT SIDE ONLY
TRANSMISSION GEAR DATA: BOT 8-Bolt Opening Gear FORWARD of Centerline 56 Teeth - SPUR **PITCH LINE TO APERTURE FACE:** .4010" (10.1854MM)	**TRANSMISSION GEAR DATA:** R.H. 6-Bolt Opening Gear FORWARD of Centerline 56 Teeth - SPUR **PITCH LINE TO APERTURE FACE:** .5550" (14.0970MM)

Caution: Application Approval Required for P.T.O. Output Shaft Speeds Above 2500 R.P.M.

BOTTOM Side P.T.O. Model	Inter. Torq.	Dir. Rot.	Engine % Hi	Engine % Rev	Filler Block	Adapter Assy.	Stud Kit	RIGHT Side P.T.O. Model	Inter. Torq.	Dir. Rot.	Engine % Hi	Engine % Rev	Filler Block	Adapter Assy.	Stud Kit
ONE SPEED - SINGLE GEAR - MECHANICAL SHIFT															
100KRAHX-*3 (1)	125	Eng	100		7-A-140		8000-13X	100KRAHX-*3 (1)	125	Eng	100		7-A-450		7170-13X
812XKAHX-*3	400	Eng	67		8-A-295		328170-159X								
ONE SPEED - TWO GEAR - MECHANICAL SHIFT															
489KFAHX-*3 (4)	250	Opp	62		8-A-248 8-A-093		328170-129X	221KCAHX-*3	250	Opp	46		7-A-500		328170-33X
489KHAHX-*3 (5)	250	Opp	72		8-A-248 8-A-093		328170-129X	221KEAHX-*3	250	Opp	52		7-A-450		328170-33X
489KLAHX-*3 (6)	250	Opp	80		8-A-248 8-A-093		328170-129X	221KLAHX-*3	250	Opp	69		7-A-450		328170-33X
489KQAHX-*3 (6)	225	Opp	87		8-A-248 8-A-093		328170-129X	221KPAHX-*3	200	Opp	84		7-A-450		328170-33X
489KRAHX-*3 (6)	225	Opp	100		8-A-248 8-A-093		328170-129X	442KAAHX-*3 (2)	250	Opp	39		7-A-450		7170-5X
489KSAHX-*3 (6)	200	Opp	119		8-A-248 8-A-093		328170-129X	442KCAHX-*3 (3)	250	Opp	50		7-A-450		7170-5X
489KUAHX-*3 (6)	195	Opp	142		8-A-248 8-A-093		328170-129X	442KFAHX-*3 (4)	250	Opp	62		7-A-450		7170-5X
489KWAHX-*3 (6)	175	Opp	167		8-A-248 8-A-093		328170-129X	442KHAHX-*3 (5)	250	Opp	72		7-A-450		7170-5X
489KXAHX-*3 (6)	140	Opp	198		8-A-248 8-A-093		328170-129X	442KLAHX-*3 (6)	250	Opp	80		7-A-450		7170-5X
680KFAHX-*3 (7)	375	Opp	62		8-A-248 8-A-093		328170-129X	442KQAHX-*3 (6)	225	Opp	87		7-A-450		7170-5X
680KQAHX-*3 (8)	375	Opp	87		8-A-248 8-A-093		328170-129X	442KRAHX-*3 (6)	225	Opp	100		7-A-450		7170-5X
680KSAHX-*3 (9)	325	Opp	119		8-A-248 8-A-093		328170-129X	442KSAHX-*3 (6)	200	Opp	119		7-A-450		7170-5X
823XBAHX-*3 (10)	500	Opp	42		8-A-165		328170-14X	442KUAHX-*3 (6)	195	Opp	142		7-A-450		7170-5X
823XJAHX-*3 (11)	500	Opp	64		8-A-165		328170-14X	442KWAHX-*3 (6)	175	Opp	167		7-A-450		7170-5X
823XMAHX-*3 (12)	500	Opp	75		8-A-165		328170-14X	442KXAHX-*3 (6)	140	Opp	198		7-A-450		7170-5X
823XRAHX-*3 (13)	400	Opp	104		8-A-165		328170-14X	660KFAHX-*3 (7)	375	Opp	62		7-A-450		7170-5X
880KBAHX-*3 (14)	500	Opp	42		8-A-295(P) 8-A-032(T)		328170-129X	660KQAHX-*3 (8)	375	Opp	87		7-A-450		7170-5X
880KDAHX-*3 (15)	500	Opp	50		8-A-295(P) 8-A-032(T)		328170-129X	660KSAHX-*3 (9)	325	Opp	119		7-A-450		7170-5X

Continued Next Page

CAUTION: Do not use geared adapters with 442 "A" and "C" ratios.

CAUTION: 660/680 Series: Applications above 1500 RPM output shaft speed, contact Chelsea Technical Service for approval.

NOTE: P.T.O. speeds shown are with transmision splitter in LOW or hand valve positions 1 & 3. For P.T.O. speeds with splitter in HIGH or valve positions 2 & 4 multiply speeds shown by 1.209.

NOTE: The 221, 230, and 340 series P.T.O.s may have involute and or root interference with the transmission gear, depending on the tolerance stack up of the gears at zero backlash.

NOTE: If Ordering the 230/231 Series with the Shaft Brake Option, order the "BA" Output for Automatic Transmissions and the "BD" Output for Manual Transmissions.

(1) Gear and Shaft Kit No. KXA-2-P-565
(2) Input Gear Part No. 5-P-1280
(3) Input Gear Part No. 5-P-1287
(4) Input Gear Part No. 5-P-1077
(5) Input Gear Part No. 5-P-1364
(6) Input Gear Part No. 5-P-1004
(7) Input Gear Part No. 5-P-1242
(8) Input Gear Part No. 5-P-1246
(9) Input Gear Part No. 5-P-1322
(10) Input Gear Part No. 5-P-285
(11) Input Gear Part No. 5-P-325
(12) Input Gear Part No. 5-P-283
(13) Input Gear Part No. 5-P-721
(14) Input Gear Part No. 5-P-1100
(15) Input Gear Part No. 5-P-1101

January 2008

Parker Chelsea
Parker Hannifin Corporation
Chelsea Products Division
Olive Branch, MS 38654 USA

PSO150-16B
PSO175-16B
PSO175-16M

BOTTOM SIDE ONLY

TRANSMISSION GEAR DATA:
BOT 8-Bolt Opening Gear FORWARD of Centerline
56 Teeth - SPUR

PITCH LINE TO APERTURE FACE:
.4010" (10.1854MM)

RIGHT SIDE ONLY

TRANSMISSION GEAR DATA:
R.H. 6-Bolt Opening Gear FORWARD of Centerline
56 Teeth - SPUR

PITCH LINE TO APERTURE FACE:
.5550" (14.0970MM)

Caution: Application Approval Required for P.T.O. Output Shaft Speeds Above 2500 R.P.M.

BOTTOM Side P.T.O. Model	Inter. Torq.	Dir. Rot.	Engine % Hi	Engine % Rev	Filler Block	Adapter Assy.	Stud Kit	RIGHT Side P.T.O. Model	Inter. Torq.	Dir. Rot.	Engine % Hi	Engine % Rev	Filler Block	Adapter Assy.	Stud Kit
ONE SPEED - TWO GEAR - MECHANICAL SHIFT															
880KGAHX-*3 (16)	500	Opp	54		8-A-295(P) 8-A-032(T)		328170-129X								
880KJAHX-*3 (17)	500	Opp	64		8-A-295(P) 8-A-032(T)		328170-129X								
880KMAHX-*3 (18)	500	Opp	75		8-A-295(P) 8-A-032(T)		328170-129X								
880KQAHX-*3 (19)	450	Opp	88		8-A-295(P) 8-A-032(T)		328170-129X								
880KRAHX-*3 (20)	400	Opp	104		8-A-295(P) 8-A-032(T)		328170-129X								
880KTAHX-*3 (21)	350	Opp	134		8-A-295(P) 8-A-032(T)		328170-129X								
ONE SPEED - TWO GEAR - POWERSHIFT (AIR)															
885KBAHX-*3 (14)	500	Opp	42		8-A-295(P) 8-A-032(T)		328170-129X	230KKAJX-*3	250	Opp	67		7-A-450		328170-174X
885KGAHX-*3 (16)	500	Opp	54		8-A-295(P) 8-A-032(T)		328170-129X	230KQAJX-*3	300	Opp	89		7-A-450		328170-174X
885KJAHX-*3 (17)	500	Opp	64		8-A-295(P) 8-A-032(T)		328170-129X	230KUAJX-*3	250	Opp	142		7-A-450		328170-174X
885KMAHX-*3 (18)	500	Opp	75		8-A-295(P) 8-A-032(T)		328170-129X	236KDAHX-*3 (6)	250	Opp	65		7-A-450		7170-5X
								236KKAHX-*3 (6)	250	Opp	83		7-A-450		7170-5X
								236KQAHX-*3 (6)	250	Opp	112		7-A-450		7170-5X
								236KUAHX-*3 (6)	225	Opp	129		7-A-450		7170-5X
ONE SPEED - FORWARD & REVERSE															
863KBAHX-*5	500	Opp	42	52	8-A-295(P) 8-A-032(T)		328170-129X	340SFAHX-*5 (22)	200	Opp	54	57	7-A-450 7-A-140 (23)		7170-4X
								352KSAHX-*3 (6)	140	Opp	121	157	7-A-450		7170-5X
								352XSAHX-*3 (6)	140	Opp	121	157	7-A-450		7170-5X
ONE SPEED - DUAL SHAFT															
								452KSAHX-*3 (6)	140	Opp	121		7-A-450		7170-5X
GEARED ADAPTERS															
								626KAHX-3AH					7-A-450		7170-5X

Continued Next Page

CAUTION: Do not use geared adapters with 442 "A" and "C" ratios.

CAUTION: 660/680 Series: Applications above 1500 RPM output shaft speed, contact Chelsea Technical Service for approval.

NOTE: P.T.O. speeds shown are with transmision splitter in LOW or hand valve positions 1 & 3. For P.T.O. speeds with splitter in HIGH or valve positions 2 & 4 multiply speeds shown by 1.209.

NOTE: The 221, 230, and 340 series P.T.O.s may have involute and or root interference with the transmission gear, depending on the tolerance stack up of the gears at zero backlash.

NOTE: If Ordering the 230/231 Series with the Shaft Brake Option, order the "BA" Output for Automatic Transmissions and the "BD" Output for Manual Transmissions.

(6) Input Gear Part No. 5-P-1004
(14) Input Gear Part No. 5-P-1100
(16) Input Gear Part No. 5-P-1135
(17) Input Gear Part No. 5-P-1102
(18) Input Gear Part No. 5-P-1103
(19) Input Gear Part No. 5-P-1385
(20) Input Gear Part No. 5-P-1104
(21) Input Gear Part No. 5-P-1105
(22) Input Gear Part No. 5-P-581
(23) Filler block furnished with P.T.O.

January 2008

Parker Hannifin Corporation
Chelsea Products Division
Olive Branch, MS 38654 USA

PSO150-16B
PSO175-16B
PSO175-16M

RIGHT SIDE ONLY

TRANSMISSION GEAR DATA:
R.H. 6-Bolt Opening Gear FORWARD of Centerline
56 Teeth - SPUR

PITCH LINE TO APERTURE FACE:
.5550" (14.0970MM)

Caution: Application Approval Required for P.T.O. Output Shaft Speeds Above 2500 R.P.M.

BOTTOM Side P.T.O. Model	Inter. Torq.	Dir. Rot.	Engine % Hi	Engine % Rev	Filler Block	Adapter Assy.	Stud Kit	RIGHT Side P.T.O. Model	Inter. Torq.	Dir. Rot.	Engine % Hi	Engine % Rev	Filler Block	Adapter Assy.	Stud Kit
GEARED ADAPTERS															
								630KAHX-3AH					7-A-450		7170-5X
								645KAHX-3AH					7-A-450		7170-5X

CAUTION: Do not use geared adapters with 442 "A" and "C" ratios.

CAUTION: 660/680 Series: Applications above 1500 RPM output shaft speed, contact Chelsea Technical Service for approval.

NOTE: P.T.O. speeds shown are with transmision splitter in LOW or hand valve positions 1 & 3. For P.T.O. speeds with splitter in HIGH or valve positions 2 & 4 multiply speeds shown by 1.209.

NOTE: The 221, 230, and 340 series P.T.O.s may have involute and or root interference with the transmission gear, depending on the tolerance stack up of the gears at zero backlash.

NOTE: If Ordering the 230/231 Series with the Shaft Brake Option, order the "BA" Output for Automatic Transmissions and the "BD" Output for Manual Transmissions.

Parker Hannifin Corporation
Chelsea Products Division
Olive Branch, MS 38654 USA

AS100-10D	LAS125-10D	LLAS135-10D	LLPS145-10D	PS100-10D
AS125-10D	LAS135-10D	LLAS145-10D	LPS100-10D	PS125-10D
AS135-10D	LAS145-10D	LLPS100-10D	LPS125-10D	PS135-10D
AS145-10D	LLAS100-10D	LLPS125-10D	LPS135-10D	PS145-10D
LAS100-10D	LLAS125-10D	LLPS135-10D	LPS145-10D	

LEFT SIDE ONLY

TRANSMISSION GEAR DATA:
L.H. 6-Bolt Opening Gear FORWARD of Centerline
45 Teeth - SPUR
PITCH LINE TO APERTURE FACE:
.7300" (17.8550MM)

RIGHT SIDE ONLY

TRANSMISSION GEAR DATA:
R.H. 6-Bolt Opening Gear REAR of Centerline
45 Teeth - SPUR
PITCH LINE TO APERTURE FACE:
1.0750" (27.3050MM)

Caution: Application Approval Required for P.T.O. Output Shaft Speeds Above 2500 R.P.M.

LEFT Side P.T.O. Model	Inter. Torq.	Dir. Rot.	Engine % Hi	Engine % Rev	Filler Block	Adapter Assy.	Stud Kit	RIGHT Side P.T.O. Model	Inter. Torq.	Dir. Rot.	Engine % Hi	Engine % Rev	Filler Block	Adapter Assy.	Stud Kit
ONE SPEED - SINGLE GEAR - MECHANICAL SHIFT															
812XKAHX-*3	400	Eng	83				Furnished								
ONE SPEED - TWO GEAR - MECHANICAL SHIFT															
221XEAHX-*5	250	Opp	64			328481X	Furnished	221XCAHX-*4	250	Opp	56		7-A-062 7-A-032 (1)		Furnished
221XLAHX-*5	200	Opp	86			328481X	Furnished	221XEAHX-*4	250	Opp	64				Furnished
221XPAHX-*5	200	Opp	104			328481X	Furnished	221XLAHX-*4	200	Opp	86				Furnished
489XFAHX-*5 (2)	250	Opp	77				Furnished	221XPAHX-*4	200	Opp	104				Furnished
489XHAHX-*5 (3)	250	Opp	89				Furnished	442XFAHX-*4 (2)	250	Opp	77				Furnished
489XLAHX-*5 (4)	250	Opp	100				Furnished	442XHAHX-*4 (3)	250	Opp	89				Furnished
489XQAHX-*5 (4)	225	Opp	108				Furnished	442XLAHX-*4 (4)	250	Opp	100				Furnished
489XRAHX-*5 (4)	225	Opp	125				Furnished	442XQAHX-*4 (4)	225	Opp	108				Furnished
489XSAHX-*5 (4)	200	Opp	149				Furnished	442XRAHX-*4 (4)	225	Opp	125				Furnished
489XUAHX-*5 (4)	195	Opp	177				Furnished	442XSAHX-*4 (4)	200	Opp	149				Furnished
489XWAHX-*5 (4)	175	Opp	209				Furnished	442XUAHX-*4 (4)	195	Opp	177				Furnished
489XXAHX-*5 (4)	140	Opp	247				Furnished	442XWAHX-*4 (4)	175	Opp	209				Furnished
680XFAHX-*5 (5)	375	Opp	77				Furnished	442XXAHX-*4 (4)	140	Opp	247				Furnished
680XQAHX-*5 (6)	375	Opp	108				Furnished	660XFAHX-*4 (5)	375	Opp	77				Furnished
680XSAHX-*5 (7)	325	Opp	149				Furnished	660XQAHX-*4 (6)	375	Opp	108				Furnished
823XTKTX-*3 (8)	350	Opp	157		8-A-165 (9)		Furnished	660XSAHX-*4 (7)	325	Opp	149				Furnished
880XBAHX-*3 (10)	500	Opp	53				Furnished								
880XDAHX-*5 (11)	500	Opp	63				Furnished								
880XGAHX-*3 (12)	500	Opp	68				Furnished								
880XJAHX-*3 (13)	500	Opp	80				Furnished								
880XMAHX-*3 (14)	500	Opp	94				Furnished								
880XQAHX-*3 (15)	450	Opp	110				Furnished								
880XRAHX-*3 (16)	400	Opp	130				Furnished								
880XTAHX-*3 (17)	350	Opp	167				Furnished								
ONE SPEED - TWO GEAR - POWERSHIFT (AIR)															
885XBAHX-*3 (10)	500	Opp	53				Furnished	230XKAJX-*4	250	Opp	83				Furnished
885XGAHX-*3 (12)	500	Opp	68				Furnished	230XQAJX-*4	250	Opp	110				Furnished
885XJAHX-*3 (13)	500	Opp	80				Furnished	230XUAJX-*4	225	Opp	177				Furnished
885XMAHX-*3 (14)	500	Opp	94				Furnished	236XDAHX-*4 (4)	250	Opp	81				Furnished
								236XKAHX-*4 (4)	250	Opp	104				Furnished

Continued Next Page

CAUTION: 660/680 Series: Applications above 1500 RPM output shaft speed, contact Chelsea Technical Service for approval.

NOTE: The AK & XK output flanges can not be used with the "A" & "C" ratios on the 489 Series P.T.O.s due to mounting stud interference. Use a RA or RB rotatable flange for the XK and the RA for the AK flange.

NOTE: If Ordering the 230/231 Series with the Shaft Brake Option, order the "BA" Output for Automatic Transmissions and the "BD" Output for Manual Transmissions.

(1) Filler block furnished with P.T.O. but not required
(2) Input Gear Part No. 5-P-1077
(3) Input Gear Part No. 5-P-1364
(4) Input Gear Part No. 5-P-1004
(5) Input Gear Part No. 5-P-1242
(6) Input Gear Part No. 5-P-1246
(7) Input Gear Part No. 5-P-1322
(8) Input Gear Part No. 5-P-1395
(9) Filler block furnished with P.T.O.
(10) Input Gear Part No. 5-P-1100
(11) Input Gear Part No. 5-P-1101
(12) Input Gear Part No. 5-P-1135
(13) Input Gear Part No. 5-P-1102
(14) Input Gear Part No. 5-P-1103
(15) Input Gear Part No. 5-P-1385
(16) Input Gear Part No. 5-P-1104
(17) Input Gear Part No. 5-P-1105

January 2008

Parker Hannifin Corporation
Chelsea Products Division
Olive Branch, MS 38654 USA

AS100-10D	LAS125-10D	LLAS135-10D	LLPS145-10D	PS100-10D
AS125-10D	LAS135-10D	LLAS145-10D	LPS100-10D	PS125-10D
AS135-10D	LAS145-10D	LLPS100-10D	LPS125-10D	PS135-10D
AS145-10D	LLAS100-10D	LLPS125-10D	LPS135-10D	PS145-10D
LAS100-10D	LLAS125-10D	LLPS135-10D	LPS145-10D	

LEFT SIDE ONLY

TRANSMISSION GEAR DATA:
L.H. 6-Bolt Opening Gear FORWARD of Centerline
45 Teeth - SPUR

PITCH LINE TO APERTURE FACE:
.7300" (17.8550MM)

RIGHT SIDE ONLY

TRANSMISSION GEAR DATA:
R.H. 6-Bolt Opening Gear REAR of Centerline
45 Teeth - SPUR

PITCH LINE TO APERTURE FACE:
1.0750" (27.3050MM)

Caution: Application Approval Required for P.T.O. Output Shaft Speeds Above 2500 R.P.M.

LEFT Side P.T.O. Model	Inter. Torq.	Dir. Rot.	Engine % Hi	Engine % Rev	Filler Block	Adapter Assy.	Stud Kit	RIGHT Side P.T.O. Model	Inter. Torq.	Dir. Rot.	Engine % Hi	Engine % Rev	Filler Block	Adapter Assy.	Stud Kit
ONE SPEED - TWO GEAR - POWERSHIFT (AIR)															
								236XQAHX-*4 (4)	250	Opp	140				Furnished
								236XUAHX-*4 (4)	225	Opp	161				Furnished
ONE SPEED - FORWARD & REVERSE															
863XBAHX-*5	500	Opp	53	65			Furnished	340XFAHX-*4 (18)	200	Opp	68	71	7-A-140 (9)		Furnished
								352XSAHX-*4 (4)	140	Opp	151	195			Furnished
ONE SPEED - DUAL SHAFT															
								452XSAHX-*4 (4)	140	Opp	151				Furnished

CAUTION: 660/680 Series: Applications above 1500 RPM output shaft speed, contact Chelsea Technical Service for approval.

NOTE: The AK & XK output flanges can not be used with the "A" & "C" ratios on the 489 Series P.T.O.s due to mounting stud interference. Use a RA or RB rotatable flange for the XK and the RA for the AK flange.

NOTE: If Ordering the 230/231 Series with the Shaft Brake Option, order the "BA" Output for Automatic Transmissions and the "BD" Output for Manual Transmissions.

(4) Input Gear Part No. 5-P-1004
(9) Filler block furnished with P.T.O.
(18) Input Gear Part No. 5-P-581

Parker Hannifin Corporation
Chelsea Products Division
Olive Branch, MS 38654 USA

PS86-10V

LEFT SIDE ONLY

TRANSMISSION GEAR DATA:
L.H. 8-Bolt Opening Gear FORWARD of Centerline
45 Teeth - SPUR

PITCH LINE TO APERTURE FACE:
.7300" (17.8550MM)

RIGHT SIDE ONLY

TRANSMISSION GEAR DATA:
R.H. 6-Bolt Opening Gear REAR of Centerline
45 Teeth - SPUR

PITCH LINE TO APERTURE FACE:
1.0750" (27.3050MM)

Caution: Application Approval Required for P.T.O. Output Shaft Speeds Above 2500 R.P.M.

LEFT Side P.T.O. Model	Inter. Torq.	Dir. Rot.	Engine % Hi	Engine % Rev	Filler Block	Adapter Assy.	Stud Kit	RIGHT Side P.T.O. Model	Inter. Torq.	Dir. Rot.	Engine % Hi	Engine % Rev	Filler Block	Adapter Assy.	Stud Kit
ONE SPEED - SINGLE GEAR - MECHANICAL SHIFT															
812XKAHX-*3	400	Eng	76				Furnished								
ONE SPEED - TWO GEAR - MECHANICAL SHIFT															
221XEAHX-*5	250	Opp	58			328481X	Furnished	221XCAHX-*4	250	Opp	51		7-A-062 7-A-032 (1)		Furnished
489XAAHX-*5 (5)	250	Opp	44				Furnished	221XEAHX-*4	250	Opp	58				Furnished
489XCAHX-*5 (6)	250	Opp	57				Furnished	221XLAHX-*4	200	Opp	78				Furnished
489XFAHX-*5 (2)	250	Opp	70				Furnished	221XPAHX-*4	200	Opp	95				Furnished
489XHAHX-*5 (3)	250	Opp	81				Furnished	442XFAHX-*4 (2)	250	Opp	70				Furnished
489XLAHX-*5 (4)	250	Opp	91				Furnished	442XHAHX-*4 (3)	250	Opp	81				Furnished
489XQAHX-*5 (4)	225	Opp	98				Furnished	442XLAHX-*4 (4)	250	Opp	91				Furnished
489XRAHX-*5 (4)	225	Opp	113				Furnished	442XQAHX-*4 (4)	225	Opp	98				Furnished
489XSAHX-*5 (4)	200	Opp	135				Furnished	442XRAHX-*4 (4)	225	Opp	113				Furnished
489XUAHX-*5 (4)	195	Opp	161				Furnished	442XSAHX-*4 (4)	200	Opp	135				Furnished
489XWAHX-*5 (4)	175	Opp	189				Furnished	442XUAHX-*4 (4)	195	Opp	161				Furnished
489XXAHX-*5 (4)	140	Opp	224				Furnished	442XWAHX-*4 (4)	175	Opp	189				Furnished
680XFAHX-*5 (7)	375	Opp	70				Furnished	442XXAHX-*4 (4)	140	Opp	224				Furnished
680XQAHX-*5 (8)	375	Opp	98				Furnished	660XFAHX-*4 (7)	375	Opp	70				Furnished
680XSAHX-*5 (9)	325	Opp	135				Furnished	660XQAHX-*4 (8)	375	Opp	98				Furnished
823XTKTX-*3 (10)	350	Opp	142		8-A-165 (11)		Furnished	660XSAHX-*4 (9)	325	Opp	135				Furnished
880XBAHX-*3 (12)	500	Opp	48				Furnished								
880XDAHX-*3 (13)	500	Opp	57				Furnished								
880XGAHX-*3 (14)	500	Opp	62				Furnished								
880XJAHX-*3 (15)	500	Opp	72				Furnished								
880XMAHX-*3 (16)	500	Opp	85				Furnished								
880XQAHX-*3 (17)	450	Opp	99				Furnished								
880XRAHX-*3 (18)	400	Opp	117				Furnished								
880XTAHX-*3 (19)	350	Opp	151				Furnished								
ONE SPEED - TWO GEAR - POWERSHIFT (AIR)															
230XKAJX-*4	250	Opp	75			328481X	Furnished	230XKAJX-*4	250	Opp	75		7-A-093		Furnished
230XQAJX-*4	250	Opp	100			328481X	Furnished	230XQAJX-*4	250	Opp	100		7-A-093		Furnished
230XUAJX-*4	225	Opp	160			328481X	Furnished	230XUAJX-*4	225	Opp	160		7-A-093		Furnished
885XBAHX-*3 (12)	500	Opp	48				Furnished	236XDAHX-*4 (4)	250	Opp	74				Furnished
885XGAHX-*3 (14)	500	Opp	62				Furnished	236XKAHX-*4 (4)	250	Opp	94				Furnished

Continued Next Page

CAUTION: 660/680 Series: Applications above 1500 RPM output shaft speed, contact Chelsea Technical Service for approval.

NOTE: The AK & XK output flanges can not be used with the "A" & "C" ratios on the 489 Series P.T.O.s due to mounting stud interference. Use a RA or RB rotatable flange for the XK and the RA for the AK flange.

NOTE: If Ordering the 230/231 Series with the Shaft Brake Option, order the "BA" Output for Automatic Transmissions and the "BD" Output for Manual Transmissions.

(1) Filler block furnished with P.T.O. but not required
(2) Input Gear Part No. 5-P-1077
(3) Input Gear Part No. 5-P-1364
(4) Input Gear Part No. 5-P-1004
(5) Input Gear Part No. 5-P-1280
(6) Input Gear Part No. 5-P-1287
(7) Input Gear Part No. 5-P-1242
(8) Input Gear Part No. 5-P-1246
(9) Input Gear Part No. 5-P-1322
(10) Input Gear Part No. 5-P-1395
(11) Filler block furnished with P.T.O.
(12) Input Gear Part No. 5-P-1100
(13) Input Gear Part No. 5-P-1101
(14) Input Gear Part No. 5-P-1135
(15) Input Gear Part No. 5-P-1102
(16) Input Gear Part No. 5-P-1103
(17) Input Gear Part No. 5-P-1385
(18) Input Gear Part No. 5-P-1104
(19) Input Gear Part No. 5-P-1105

January 2008

Parker Hannifin Corporation
Chelsea Products Division
Olive Branch, MS 38654 USA

PS86-10V

LEFT SIDE ONLY	RIGHT SIDE ONLY
TRANSMISSION GEAR DATA: L.H. 8-Bolt Opening Gear FORWARD of Centerline 45 Teeth - SPUR **PITCH LINE TO APERTURE FACE:** .7300" (17.8550MM)	**TRANSMISSION GEAR DATA:** R.H. 6-Bolt Opening Gear REAR of Centerline 45 Teeth - SPUR **PITCH LINE TO APERTURE FACE:** 1.0750" (27.3050MM)

Caution: Application Approval Required for P.T.O. Output Shaft Speeds Above 2500 R.P.M.

LEFT Side P.T.O. Model	Inter. Torq.	Dir. Rot.	Engine % Hi	Engine % Rev	Filler Block	Adapter Assy.	Stud Kit	RIGHT Side P.T.O. Model	Inter. Torq.	Dir. Rot.	Engine % Hi	Engine % Rev	Filler Block	Adapter Assy.	Stud Kit
ONE SPEED - TWO GEAR - POWERSHIFT (AIR)															
885XJAHX-*3 (15)	500	Opp	72				Furnished	236XQAHX-*4 (4)	250	Opp	127				Furnished
885XMAHX-*3 (16)	500	Opp	85				Furnished	236XUAHX-*4 (4)	225	Opp	146				Furnished
ONE SPEED - FORWARD & REVERSE															
340XFAHX-*4 (20)	200	Opp	61	64	7-A-140 (1)		Furnished	340XFAHX-*4 (20)	200	Opp	61	64	7-A-140 (1)		Furnished
352XSAHX-*4 (4)	140	Opp	137	177			Furnished	352XSAHX-*4 (4)	140	Opp	137	177			Furnished
863XBAHX-*5	500	Opp	48	59			Furnished								
ONE SPEED - DUAL SHAFT															
452XSAHX-*4 (4)	140	Opp	137				Furnished	452XSAHX-*4 (4)	140	Opp	137				Furnished

CAUTION: 660/680 Series: Applications above 1500 RPM output shaft speed, contact Chelsea Technical Service for approval.

NOTE: The AK & XK output flanges can not be used with the "A" & "C" ratios on the 489 Series P.T.O.s due to mounting stud interference. Use a RA or RB rotatable flange for the XK and the RA for the AK flange.

NOTE: If Ordering the 230/231 Series with the Shaft Brake Option, order the "BA" Output for Automatic Transmissions and the "BD" Output for Manual Transmissions.

(1) Filler block furnished with P.T.O. but not required
(4) Input Gear Part No. 5-P-1004
(15) Input Gear Part No. 5-P-1102
(16) Input Gear Part No. 5-P-1103
(20) Input Gear Part No. 5-P-581

EPSO175-16M PSO175-18M
PSO165-16B
PSO165-18A
PSO175-16SM
PSO175-18A

BOTTOM SIDE ONLY

TRANSMISSION GEAR DATA:
BOT 8-Bolt Opening Gear FORWARD of Centerline
57 Teeth - SPUR

PITCH LINE TO APERTURE FACE:
.3160" (8.0264MM)

RIGHT SIDE ONLY

TRANSMISSION GEAR DATA:
R.H. 6-Bolt Opening Gear FORWARD of Centerline
57 Teeth - SPUR

PITCH LINE TO APERTURE FACE:
.4710" (11.9634MM)

Caution: Application Approval Required for P.T.O. Output Shaft Speeds Above 2500 R.P.M.

BOTTOM Side P.T.O. Model	Inter. Torq.	Dir. Rot.	Engine % Hi	Engine % Rev	Filler Block	Adapter Assy.	Stud Kit	RIGHT Side P.T.O. Model	Inter. Torq.	Dir. Rot.	Engine % Hi	Engine % Rev	Filler Block	Adapter Assy.	Stud Kit
ONE SPEED - SINGLE GEAR - MECHANICAL SHIFT															
100KRAHX-*3 (1)	125	Eng	100		7-A-140	328564X	8000-13X	100KRAHX-*3 (1)	125	Eng	100		7-A-450		7170-13X
812XKAHX-*5	400	Eng	67		8-A-295		328170-159X								
ONE SPEED - TWO GEAR - MECHANICAL SHIFT															
489KFAHX-*5 (4)	250	Opp	62		8-A-248 8-A-093		328170-129X	221KCAHX-*3	250	Opp	46		7-A-500		328170-33X
489KHAHX-*5 (5)	250	Opp	72		8-A-248 8-A-093		328170-129X	221KEAHX-*3	250	Opp	51		7-A-450		328170-33X
489KLAHX-*5 (6)	250	Opp	80		8-A-248 8-A-093		328170-129X	221KLAHX-*3	250	Opp	69		7-A-450		328170-33X
489KQAHX-*5 (6)	225	Opp	86		8-A-248 8-A-093		328170-129X	221KPAHX-*3	200	Opp	83		7-A-450		328170-33X
489KRAHX-*5 (6)	225	Opp	100		8-A-248 8-A-093		328170-129X	442KAAHX-*3 (2)	250	Opp	39		7-A-450		7170-5X
489KSAHX-*5 (6)	200	Opp	119		8-A-248 8-A-093		328170-129X	442KCAHX-*3 (3)	250	Opp	50		7-A-450		7170-5X
489KUAHX-*5 (6)	195	Opp	142		8-A-248 8-A-093		328170-129X	442KFAHX-*3 (4)	250	Opp	62		7-A-450		7170-5X
489KWAHX-*5 (6)	175	Opp	167		8-A-248 8-A-093		328170-129X	442KHAHX-*3 (5)	250	Opp	72		7-A-450		7170-5X
489KXAHX-*5 (6)	140	Opp	197		8-A-248 8-A-093		328170-129X	442KLAHX-*3 (6)	250	Opp	80		7-A-450		7170-5X
680KFAHX-*5 (7)	375	Opp	62		8-A-248 8-A-093		328170-129X	442KQAHX-*3 (6)	225	Opp	86		7-A-450		7170-5X
680KQAHX-*5 (8)	375	Opp	86		8-A-248 8-A-093		328170-129X	442KRAHX-*3 (6)	225	Opp	100		7-A-450		7170-5X
680KSAHX-*5 (9)	325	Opp	119		8-A-248 8-A-093		328170-129X	442KSAHX-*3 (6)	200	Opp	119		7-A-450		7170-5X
880KBAHX-*3 (10)	500	Opp	42		8-A-295(P) 8-A-032(T)		328170-129X	442KUAHX-*3 (6)	195	Opp	142		7-A-450		7170-5X
880KDAHX-*3 (11)	500	Opp	50		8-A-295(P) 8-A-032(T)		328170-129X	442KWAHX-*3 (6)	175	Opp	167		7-A-450		7170-5X
880KGAHX-*3 (12)	500	Opp	54		8-A-295(P) 8-A-032(T)		328170-129X	442KXAHX-*3 (6)	140	Opp	197		7-A-450		7170-5X
880KJAHX-*3 (13)	500	Opp	64		8-A-295(P) 8-A-032(T)		328170-129X	660KFAHX-*3 (7)	375	Opp	62		7-A-450		7170-5X

Continued Next Page

CAUTION: Do not use geared adapters with 442 "A" and "C" ratios.

CAUTION: 660/680 Series: Applications above 1500 RPM output shaft speed, contact Chelsea Technical Service for approval.

NOTE: The 221, 230, and 340 series P.T.O.s may have involute and or root interference with the transmission gear depending on the tolerance stack up of the gears at zero backlash.

NOTE: All P.T.O. speeds shown on this application are with the transmission splitter in LOW or hand valve position 1 and 3. For P.T.O. output speeds with the transmission splitter in HIGH or handvalve position 2 and 4, multiply speeds shown by 1.187.

NOTE: If Ordering the 230/231 Series with the Shaft Brake Option, order the "BA" Output for Automatic Transmissions and the "BD" Output for Manual Transmissions.

(1) Gear and Shaft Kit No. KXA-2-P-565
(2) Input Gear Part No. 5-P-1280
(3) Input Gear Part No. 5-P-1287
(4) Input Gear Part No. 5-P-1077
(5) Input Gear Part No. 5-P-1364
(6) Input Gear Part No. 5-P-1004
(7) Input Gear Part No. 5-P-1242
(8) Input Gear Part No. 5-P-1246
(9) Input Gear Part No. 5-P-1322
(10) Input Gear Part No. 5-P-1100
(11) Input Gear Part No. 5-P-1101
(12) Input Gear Part No. 5-P-1135
(13) Input Gear Part No. 5-P-1102

January 2008

Parker Hannifin Corporation
Chelsea Products Division
Olive Branch, MS 38654 USA

EPSO175-16M PSO175-18M
PSO165-16B
PSO165-18A
PSO175-16SM
PSO175-18A

BOTTOM SIDE ONLY

TRANSMISSION GEAR DATA:
BOT 8-Bolt Opening Gear FORWARD of Centerline
57 Teeth - SPUR
PITCH LINE TO APERTURE FACE:
.3160" (8.0264MM)

RIGHT SIDE ONLY

TRANSMISSION GEAR DATA:
R.H. 6-Bolt Opening Gear FORWARD of Centerline
57 Teeth - SPUR
PITCH LINE TO APERTURE FACE:
.4710" (11.9634MM)

Caution: Application Approval Required for P.T.O. Output Shaft Speeds Above 2500 R.P.M.

BOTTOM Side P.T.O. Model	Inter. Torq.	Dir. Rot.	Engine % Hi	Engine % Rev	Filler Block	Adapter Assy.	Stud Kit	RIGHT Side P.T.O. Model	Inter. Torq.	Dir. Rot.	Engine % Hi	Engine % Rev	Filler Block	Adapter Assy.	Stud Kit
ONE SPEED - TWO GEAR - MECHANICAL SHIFT															
880KMAHX-*3 (14)	500	Opp	75		8-A-295(P) 8-A-032(T)		328170-129X	660KQAHX-*3 (8)	375	Opp	86		7-A-450		7170-5X
880KQAHX-*3 (15)	450	Opp	88		8-A-295(P) 8-A-032(T)		328170-129X	660KSAHX-*3 (9)	325	Opp	119		7-A-450		7170-5X
880KRAHX-*3 (16)	400	Opp	104		8-A-295(P) 8-A-032(T)		328170-129X								
880KTAHX-*3 (17)	350	Opp	133		8-A-295(P) 8-A-032(T)		328170-129X								
ONE SPEED - TWO GEAR - POWERSHIFT (AIR)															
885KBAHX-*3 (10)	500	Opp	42		8-A-295(P) 8-A-032(T)		328170-129X	230KKAJX-*3	250	Opp	66		7-A-450		328170-174X
885KGAHX-*3 (12)	500	Opp	54		8-A-295(P) 8-A-032(T)		328170-129X	230KQAJX-*3	250	Opp	88		7-A-450		328170-174X
885KJAHX-*3 (13)	500	Opp	64		8-A-295(P) 8-A-032(T)		328170-129X	230KUAJX-*3	225	Opp	141		7-A-450		328170-174X
885KMAHX-*3 (14)	500	Opp	75		8-A-295(P) 8-A-032(T)		328170-129X	236KDAHX-*3 (6)	250	Opp	65		7-A-450		7170-5X
								236KKAHX-*3 (6)	250	Opp	83		7-A-450		7170-5X
								236KQAHX-*3 (6)	250	Opp	112		7-A-450		7170-5X
								236KUAHX-*3 (6)	225	Opp	128		7-A-450		7170-5X
ONE SPEED - FORWARD & REVERSE															
863XBAHX-*5	500	Opp	42	52	8-A-295(P) 8-A-032(T)		328170-129X	340SFAHX-*5 (18)	200	Opp	54	57	7-A-450 7-A-140 (19)		7170-4X
								352KSAHX-*3 (6)	140	Opp	121	156	7-A-450		7170-5X
ONE SPEED - DUAL SHAFT															
								452KSAHX-*3 (6)	140	Opp	121		7-A-450		7171-5X

CAUTION: Do not use geared adapters with 442 "A" and "C" ratios.

CAUTION: 660/680 Series: Applications above 1500 RPM output shaft speed, contact Chelsea Technical Service for approval.

NOTE: The 221, 230, and 340 series P.T.O.s may have involute and or root interference with the transmission gear depending on the tolerance stack up of the gears at zero backlash.

NOTE: All P.T.O. speeds shown on this application are with the transmission splitter in LOW or hand valve position 1 and 3. For P.T.O. output speeds with the transmission splitter in HIGH or handvalve position 2 and 4, multiply speeds shown by 1.187.

NOTE: If Ordering the 230/231 Series with the Shaft Brake Option, order the "BA" Output for Automatic Transmissions and the "BD" Output for Manual Transmissions.

(6) Input Gear Part No. 5-P-1004
(8) Input Gear Part No. 5-P-1246
(9) Input Gear Part No. 5-P-1322
(10) Input Gear Part No. 5-P-1100
(12) Input Gear Part No. 5-P-1135
(13) Input Gear Part No. 5-P-1102
(14) Input Gear Part No. 5-P-1103
(15) Input Gear Part No. 5-P-1385
(16) Input Gear Part No. 5-P-1104
(17) Input Gear Part No. 5-P-1105
(18) Input Gear Part No. 5-P-581
(19) Filler block furnished with P.T.O. but not required

January 2008

Parker Hannifin Corporation
Chelsea Products Division
Olive Branch, MS 38654 USA

PSO125-10D
PSO135-10D
PSO145-10D
PSO155-10D
PSO165-10D

LEFT SIDE ONLY

TRANSMISSION GEAR DATA:
L.H. 8-Bolt Opening Gear FORWARD of Centerline
45 Teeth - SPUR

PITCH LINE TO APERTURE FACE:
.7300" (17.8550MM)

RIGHT SIDE ONLY

TRANSMISSION GEAR DATA:
R.H. 6-Bolt Opening Gear REAR of Centerline
45 Teeth - SPUR

PITCH LINE TO APERTURE FACE:
1.0750" (27.3050MM)

Caution: Application Approval Required for P.T.O. Output Shaft Speeds Above 2500 R.P.M.

LEFT Side P.T.O. Model	Inter. Torq.	Dir. Rot.	Engine % Hi	Engine % Rev	Filler Block	Adapter Assy.	Stud Kit	RIGHT Side P.T.O. Model	Inter. Torq.	Dir. Rot.	Engine % Hi	Engine % Rev	Filler Block	Adapter Assy.	Stud Kit
ONE SPEED - SINGLE GEAR - MECHANICAL SHIFT															
812XKAHX-*3	400	Eng	111				Furnished								
ONE SPEED - TWO GEAR - MECHANICAL SHIFT															
221XEAHX-*5	250	Opp	85			328481X	Furnished	221XCAHX-*4	250	Opp	74		7-A-062 7-A-032 (1)		Furnished
489XAAHX-*5 (5)	250	Opp	65				Furnished	221XEAHX-*4	250	Opp	85				Furnished
489XCAHX-*5 (6)	250	Opp	83				Furnished	221XLAHX-*4	200	Opp	115				Furnished
489XFAHX-*5 (2)	250	Opp	103				Furnished	221XPAHX-*4	200	Opp	139				Furnished
489XHAHX-*5 (3)	250	Opp	119				Furnished	442XFAHX-*4 (2)	250	Opp	103				Furnished
489XLAHX-*5 (4)	250	Opp	133				Furnished	442XHAHX-*4 (3)	250	Opp	119				Furnished
489XQAHX-*5 (4)	225	Opp	143				Furnished	442XLAHX-*4 (4)	250	Opp	133				Furnished
489XRAHX-*4 (4)	200	Opp	166				Furnished	442XQAHX-*4 (4)	225	Opp	143				Furnished
489XSAHX-*4 (4)	200	Opp	197				Furnished	442XRAHX-*4 (4)	225	Opp	166				Furnished
489XUAHX-*5 (4)	195	Opp	235				Furnished	442XSAHX-*4 (4)	200	Opp	197				Furnished
489XWAHX-*5 (4)	175	Opp	277				Furnished	442XUAHX-*4 (4)	195	Opp	235				Furnished
489XXAHX-*5 (4)	140	Opp	328				Furnished	442XWAHX-*4 (4)	175	Opp	277				Furnished
680XFAHX-*5 (7)	375	Opp	103				Furnished	442XXAHX-*4 (4)	140	Opp	328				Furnished
680XQAHX-*5 (8)	375	Opp	143				Furnished	660XFAHX-*4 (7)	375	Opp	103				Furnished
680XSAHX-*4 (9)	325	Opp	197				Furnished	660XQAHX-*4 (8)	375	Opp	143				Furnished
823XTKTX-*3 (10)	350	Opp	208		8-A-165 (11)		Furnished	660XSAHX-*4 (9)	325	Opp	197				Furnished
880XBAHX-*3 (12)	500	Opp	70				Furnished								
880XDAHX-*3 (13)	500	Opp	83				Furnished								
880XGAHX-*3 (14)	500	Opp	90				Furnished								
880XJAHX-*3 (15)	500	Opp	106				Furnished								
880XMAHX-*3 (16)	500	Opp	124				Furnished								
880XQAHX-*3 (17)	450	Opp	146				Furnished								
880XRAHX-*3 (18)	400	Opp	172				Furnished								
880XTAHX-*3 (19)	350	Opp	221				Furnished								
ONE SPEED - TWO GEAR - POWERSHIFT (AIR)															
885XBAHX-*3 (12)	500	Opp	70				Furnished	230XKAJX-*4	250	Opp	110		7-A-093		Furnished
885XGAHX-*3 (14)	500	Opp	90				Furnished	230XQAJX-*4	250	Opp	146		7-A-093		Furnished
885XJAHX-*3 (15)	500	Opp	106				Furnished	230XUAJX-*4	225	Opp	234		7-A-093		Furnished
885XMAHX-*3 (16)	500	Opp	124				Furnished	236XDAHX-*4 (4)	250	Opp	108				Furnished
								236XKAHX-*4 (4)	250	Opp	138				Furnished

Continued Next Page

CAUTION: 660/680 Series: Applications above 1500 RPM output shaft speed, contact Chelsea Technical Service for approval.

NOTE: The AK & XK output flanges can not be used with the "A" & "C" ratios on the 489 Series P.T.O.s due to mounting stud interference. Use a RA or RB rotatable flange for the XK and the RA for the AK flange.

NOTE: If Ordering the 230/231 Series with the Shaft Brake Option, order the "BA" Output for Automatic Transmissions and the "BD" Output for Manual Transmissions.

(1) Filler block furnished with P.T.O. but not required
(2) Input Gear Part No. 5-P-1077
(3) Input Gear Part No. 5-P-1364
(4) Input Gear Part No. 5-P-1004
(5) Input Gear Part No. 5-P-1280
(6) Input Gear Part No. 5-P-1287
(7) Input Gear Part No. 5-P-1242
(8) Input Gear Part No. 5-P-1246
(9) Input Gear Part No. 5-P-1322
(10) Input Gear Part No. 5-P-1395
(11) Filler block furnished with P.T.O.
(12) Input Gear Part No. 5-P-1100
(13) Input Gear Part No. 5-P-1101
(14) Input Gear Part No. 5-P-1135
(15) Input Gear Part No. 5-P-1102
(16) Input Gear Part No. 5-P-1103
(17) Input Gear Part No. 5-P-1385
(18) Input Gear Part No. 5-P-1104
(19) Input Gear Part No. 5-P-1105

January 2008

Parker Hannifin Corporation
Chelsea Products Division
Olive Branch, MS 38654 USA

PSO125-10D
PSO135-10D
PSO145-10D
PSO155-10D
PSO165-10D

LEFT SIDE ONLY	RIGHT SIDE ONLY
TRANSMISSION GEAR DATA: L.H. 8-Bolt Opening Gear FORWARD of Centerline 45 Teeth - SPUR **PITCH LINE TO APERTURE FACE:** .7300" (17.8550MM)	**TRANSMISSION GEAR DATA:** R.H. 6-Bolt Opening Gear REAR of Centerline 45 Teeth - SPUR **PITCH LINE TO APERTURE FACE:** 1.0750" (27.3050MM)

Caution: Application Approval Required for P.T.O. Output Shaft Speeds Above 2500 R.P.M.

LEFT Side P.T.O. Model	Inter. Torq.	Dir. Rot.	Engine % Hi	Engine % Rev	Filler Block	Adapter Assy.	Stud Kit	RIGHT Side P.T.O. Model	Inter. Torq.	Dir. Rot.	Engine % Hi	Engine % Rev	Filler Block	Adapter Assy.	Stud Kit
ONE SPEED - TWO GEAR - POWERSHIFT (AIR)															
								236XQAHX-*4 (4)	250	Opp	186				Furnished
								236XUAHX-*4 (4)	225	Opp	213				Furnished
ONE SPEED - FORWARD & REVERSE															
863XBAHX-*5	500	Opp	70	87			Furnished	340XFAHX-*4 (20)	200	Opp	90	94	7-A-140 (1)		Furnished
								352XSAHX-*4 (4)	140	Opp	200	259			Furnished
ONE SPEED - DUAL SHAFT															
								452XSAHX-*4 (4)	140	Opp	200				Furnished

CAUTION: 660/680 Series: Applications above 1500 RPM output shaft speed, contact Chelsea Technical Service for approval.

NOTE: The AK & XK output flanges can not be used with the "A" & "C" ratios on the 489 Series P.T.O.s due to mounting stud interference. Use a RA or RB rotatable flange for the XK and the RA for the AK flange.

NOTE: If Ordering the 230/231 Series with the Shaft Brake Option, order the "BA" Output for Automatic Transmissions and the "BD" Output for Manual Transmissions.

(1) Filler block furnished with P.T.O. but not required
(4) Input Gear Part No. 5-P-1004
(20) Input Gear Part No. 5-P-581

Parker Hannifin Corporation
Chelsea Products Division
Olive Branch, MS 38654 USA

TSPO155-16HP

BOTTOM SIDE ONLY	RIGHT SIDE ONLY
TRANSMISSION GEAR DATA: BOT 8-Bolt Opening Gear FORWARD of Centerline 56 Teeth - SPUR **PITCH LINE TO APERTURE FACE:** .3980" (10.1092MM)	**TRANSMISSION GEAR DATA:** R.H. 6-Bolt Opening Gear FORWARD of Centerline 56 Teeth - SPUR **PITCH LINE TO APERTURE FACE:** .5530" (14.0462MM)

Caution: Application Approval Required for P.T.O. Output Shaft Speeds Above 2500 R.P.M.

BOTTOM Side P.T.O. Model	Inter. Torq.	Dir. Rot.	Engine % Hi	Engine % Rev	Filler Block	Adapter Assy.	Stud Kit	RIGHT Side P.T.O. Model	Inter. Torq.	Dir. Rot.	Engine % Hi	Engine % Rev	Filler Block	Adapter Assy.	Stud Kit
ONE SPEED - SINGLE GEAR - MECHANICAL SHIFT															
100KRAHX-*3 (1)	125	Eng	100		7-A-140	328564X	7170-10X	100KRAHX-*3 (1)	125	Eng	100		7-A-450		328291-4X
812XKAHX-*5	400	Eng	67		8-A-295		328170-59X								
ONE SPEED - TWO GEAR - MECHANICAL SHIFT															
489KFAHX-*5 (4)	250	Opp	62		8-A-248 8-A-062		328170-15X	221KCAHX-*3	250	Opp	46		7-A-500 7-A-032		328170-33X
489KHAHX-*5 (5)	250	Opp	72		8-A-248 8-A-062		328170-15X	221KEAHX-*3	250	Opp	51		7-A-450		328170-33X
489KLAHX-*5 (6)	250	Opp	80		8-A-248 8-A-062		328170-15X	221KLAHX-*3	250	Opp	69		7-A-450		328170-33X
489KQAHX-*5 (6)	225	Opp	86		8-A-248 8-A-062		328170-15X	221KPAHX-*3	200	Opp	83		7-A-450		328170-33X
489KRAHX-*5 (6)	225	Opp	100		8-A-248 8-A-062		328170-15X	442KAAHX-*3 (2)	250	Opp	39		7-A-450		7170-6X
489KSAHX-*5 (6)	200	Opp	119		8-A-248 8-A-062		328170-15X	442KCAHX-*3 (3)	250	Opp	50		7-A-450		7170-6X
489KUAHX-*5 (6)	195	Opp	142		8-A-248 8-A-062		328170-15X	442KFAHX-*3 (4)	250	Opp	62		7-A-450		7170-6X
489KWAHX-*5 (6)	175	Opp	167		8-A-248 8-A-062		328170-15X	442KHAHX-*3 (5)	250	Opp	72		7-A-450		7170-6X
489KXAHX-*5 (6)	140	Opp	197		8-A-248 8-A-062		328170-15X	442KLAHX-*3 (6)	250	Opp	80		7-A-450		7170-6X
680KFAHX-*5 (7)	375	Opp	62		8-A-248 8-A-062		328170-15X	442KQAHX-*3 (6)	225	Opp	86		7-A-450		7170-6X
680KQAHX-*5 (8)	375	Opp	86		8-A-248 8-A-062		328170-15X	442KRAHX-*3 (6)	225	Opp	100		7-A-450		7170-6X
680KSAHX-*5 (9)	325	Opp	119		8-A-248 8-A-062		328170-15X	442KSAHX-*3 (6)	200	Opp	119		7-A-450		7170-6X
880KBAHX-*3 (10)	500	Opp	42		8-A-295		328170-17X	442KUAHX-*3 (6)	195	Opp	142		7-A-450		7170-6X
880KDAHX-*3 (11)	500	Opp	50		8-A-295		328170-17X	442KWAHX-*3 (6)	175	Opp	167		7-A-450		7170-6X
880KGAHX-*3 (12)	500	Opp	54		8-A-295		328170-17X	442KXAHX-*3 (6)	140	Opp	197		7-A-450		7170-6X
880KJAHX-*3 (13)	500	Opp	64		8-A-295		328170-17X	660KFAHX-*3 (7)	375	Opp	62		7-A-450		7170-6X
880KMAHX-*3 (14)	500	Opp	75		8-A-295		328170-17X	660KQAHX-*3 (8)	375	Opp	86		7-A-450		7170-6X
880KQAHX-*3 (15)	450	Opp	87		8-A-295		328170-17X	660KSAHX-*3 (9)	325	Opp	119		7-A-450		7170-6X
880KRAHX-*3 (16)	400	Opp	103		8-A-295		328170-17X								
880KTAHX-*3 (17)	350	Opp	133		8-A-295		328170-17X								

Continued Next Page

CAUTION: Do not use geared adapters with 442 "A" and "C" ratios.

CAUTION: 660/680 Series: Applications above 1500 RPM output shaft speed, contact Chelsea Technical Service for approval.

NOTE: All P.T.O. speeds are shown with the transmission splitter in low or hand valve in positions 1 and 3. Multiply speeds shown by 1.214 if transmission splitter is in high, or hand valve is in positions 2 and 4.

(1) Gear and Shaft Kit No. KXA-2-P-565
(2) Input Gear Part No. 5-P-1280
(3) Input Gear Part No. 5-P-1287
(4) Input Gear Part No. 5-P-1077
(5) Input Gear Part No. 5-P-1364
(6) Input Gear Part No. 5-P-1004
(7) Input Gear Part No. 5-P-1242
(8) Input Gear Part No. 5-P-1246
(9) Input Gear Part No. 5-P-1322
(10) Input Gear Part No. 5-P-1100
(11) Input Gear Part No. 5-P-1101
(12) Input Gear Part No. 5-P-1135
(13) Input Gear Part No. 5-P-1102
(14) Input Gear Part No. 5-P-1103
(15) Input Gear Part No. 5-P-1385
(16) Input Gear Part No. 5-P-1104
(17) Input Gear Part No. 5-P-1105

January 2008

Parker Hannifin Corporation
Chelsea Products Division
Olive Branch, MS 38654 USA

TSPO155-16HP

BOTTOM SIDE ONLY	RIGHT SIDE ONLY
TRANSMISSION GEAR DATA: BOT 8-Bolt Opening Gear FORWARD of Centerline 56 Teeth - SPUR **PITCH LINE TO APERTURE FACE:** .3980" (10.1092MM)	**TRANSMISSION GEAR DATA:** R.H. 6-Bolt Opening Gear FORWARD of Centerline 56 Teeth - SPUR **PITCH LINE TO APERTURE FACE:** .5530" (14.0462MM)

Caution: Application Approval Required for P.T.O. Output Shaft Speeds Above 2500 R.P.M.

BOTTOM Side P.T.O. Model	Inter. Torq.	Dir. Rot.	Engine % Hi	Engine % Rev	Filler Block	Adapter Assy.	Stud Kit	RIGHT Side P.T.O. Model	Inter. Torq.	Dir. Rot.	Engine % Hi	Engine % Rev	Filler Block	Adapter Assy.	Stud Kit
ONE SPEED - TWO GEAR - POWERSHIFT (AIR)															
885KBAHX-*3 (10)	500	Opp	42		8-A-295		328170-17X	236KDAHX-*3 (6)	250	Opp	65		7-A-450		7170-6X
885KGAHX-*3 (12)	500	Opp	54		8-A-295		328170-17X	236KKAHX-*3 (6)	250	Opp	83		7-A-450		7170-6X
885KJAHX-*3 (13)	500	Opp	64		8-A-295		328170-17X	236KQAHX-*3 (6)	250	Opp	112		7-A-450		7170-6X
885KMAHX-*3 (14)	500	Opp	75		8-A-295		328170-17X	236KUAHX-*3 (6)	225	Opp	128		7-A-450		7170-6X
ONE SPEED - FORWARD & REVERSE															
863XBAHX-*5	500	Opp	42	52	8-A-295		328170-17X	340SFAHX-*5 (18)	200	Opp	54	57	7-A-450 7-A-140 (19)		7170-6X
								352XSAHX-*3 (6)	140	Opp	120	156			Furnished
ONE SPEED - DUAL SHAFT															
								452XSAHX-*3 (6)	140	Opp	120				7170-6X

CAUTION: Do not use geared adapters with 442 "A" and "C" ratios.

CAUTION: 660/680 Series: Applications above 1500 RPM output shaft speed, contact Chelsea Technical Service for approval.

NOTE: All P.T.O. speeds are shown with the transmission splitter in low or hand valve in positions 1 and 3. Multiply speeds shown by 1.214 if transmission splitter is in high, or hand valve is in positions 2 and 4.

(6) Input Gear Part No. 5-P-1004
(10) Input Gear Part No. 5-P-1100
(12) Input Gear Part No. 5-P-1135
(13) Input Gear Part No. 5-P-1102
(14) Input Gear Part No. 5-P-1103
(18) Input Gear Part No. 5-P-581
(19) Filler block furnished with P.T.O. but not required

Parker Hannifin Corporation
Chelsea Products Division
Olive Branch, MS 38654 USA

TSPO155-16HP

BOTTOM SIDE ONLY	RIGHT SIDE ONLY
TRANSMISSION GEAR DATA: BOT 8-Bolt Opening Gear FORWARD of Centerline 56 Teeth - SPUR **PITCH LINE TO APERTURE FACE:** .3980" (10.1092MM)	**TRANSMISSION GEAR DATA:** R.H. 6-Bolt Opening Gear FORWARD of Centerline 56 Teeth - SPUR **PITCH LINE TO APERTURE FACE:** .5530" (14.0462MM)

Caution: Application Approval Required for P.T.O. Output Shaft Speeds Above 2500 R.P.M.

BOTTOM Side P.T.O. Model	Inter. Torq.	Dir. Rot.	Engine % Hi	Engine % Rev	Filler Block	Adapter Assy.	Stud Kit	RIGHT Side P.T.O. Model	Inter. Torq.	Dir. Rot.	Engine % Hi	Engine % Rev	Filler Block	Adapter Assy.	Stud Kit
ONE SPEED - TWO GEAR - MECHANICAL SHIFT															
880KTAHX-*3 (17)	350	Opp	133		8-A-295		328170-17X								
ONE SPEED - TWO GEAR - POWERSHIFT (AIR)															
885KBAHX-*3 (10)	500	Opp	42		8-A-295		328170-17X	236KDAHX-*3 (6)	250	Opp	65		7-A-450		7170-6X
885KGAHX-*3 (12)	500	Opp	54		8-A-295		328170-17X	236KKAHX-*3 (6)	250	Opp	83		7-A-450		7170-6X
885KJAHX-*3 (13)	500	Opp	64		8-A-295		328170-17X	236KQAHX-*3 (6)	250	Opp	112		7-A-450		7170-6X
885KMAHX-*3 (14)	500	Opp	75		8-A-295		328170-17X	236KUAHX-*3 (6)	225	Opp	128		7-A-450		7170-6X
ONE SPEED - FORWARD & REVERSE															
863XBAHX-*5	500	Opp	42	52	8-A-295		328170-17X	340SFAHX-*5 (18)	200	Opp	54	57	7-A-450 7-A-140 (19)		7170-6X
								352XSAHX-*3 (6)	140	Opp	120	156			Furnished
ONE SPEED - DUAL SHAFT															
								452XSAHX-*3 (6)	140	Opp	120				7170-6X

CAUTION: Do not use geared adapters with 442 "A" and "C" ratios.

CAUTION: 660/680 Series: Applications above 1500 RPM output shaft speed, contact Chelsea Technical Service for approval.

NOTE: All P.T.O. speeds are shown with the transmission splitter in low or hand valve in positions 1 and 3. Multiply speeds shown by 1.214 if transmission splitter is in high, or hand valve is in positions 2 and 4.

(6) Input Gear Part No. 5-P-1004
(10) Input Gear Part No. 5-P-1100
(12) Input Gear Part No. 5-P-1135
(13) Input Gear Part No. 5-P-1102
(14) Input Gear Part No. 5-P-1103
(17) Input Gear Part No. 5-P-1105
(18) Input Gear Part No. 5-P-581
(19) Filler block furnished with P.T.O. but not required

TSP120-12A

BOTTOM SIDE ONLY

TRANSMISSION GEAR DATA:
BOT 8-Bolt Opening Gear FORWARD of Centerline
51 Teeth - SPUR
PITCH LINE TO APERTURE FACE:
.8160" (20.7264MM)

RIGHT SIDE ONLY

TRANSMISSION GEAR DATA:
R.H. 6-Bolt Opening Gear FORWARD of Centerline
51 Teeth - SPUR
PITCH LINE TO APERTURE FACE:
.9710" (24.6634MM)

Caution: Application Approval Required for P.T.O. Output Shaft Speeds Above 2500 R.P.M.

BOTTOM Side P.T.O. Model	Inter. Torq.	Dir. Rot.	Engine % Hi	Engine % Rev	Filler Block	Adapter Assy.	Stud Kit	RIGHT Side P.T.O. Model	Inter. Torq.	Dir. Rot.	Engine % Hi	Engine % Rev	Filler Block	Adapter Assy.	Stud Kit
ONE SPEED - SINGLE GEAR - MECHANICAL SHIFT															
100XRAHX-*3 (1)	125	Eng	90		7-A-062	328481X	7170-10X	100XRAHX-*3 (1)	125	Eng	90		7-A-200		7170-11X
812XKAHX-*3	400	Eng	60		8-A-062		Furnished								
ONE SPEED - TWO GEAR - MECHANICAL SHIFT															
221XCAHX-*3	250	Opp	40		7-A-032 (2)	310778X	Furnished	221XCAHX-*3	250	Opp	40		7-A-240 7-A-032 (3)		328170-35X
221XEAHX-*3	250	Opp	46		7-A-062	328481X	328170-93X	221XEAHX-*3	250	Opp	46		7-A-187		328170-93X
221XLAHX-*3	200	Opp	62		7-A-062	328481X	328170-93X	221XLAHX-*3	200	Opp	62		7-A-187		328170-93X
221XPAHX-*3	200	Opp	75		7-A-062	328481X	328170-93X	221XPAHX-*3	200	Opp	75		7-A-187		328170-93X
489XAAHX-*3 (4)	250	Opp	35		8-A-062		328170-190X	442XAAHX-*3 (4)	250	Opp	35		7-A-187		7170-3X
489XCAHX-*3 (5)	250	Opp	45		8-A-062		328170-190X	442XCAHX-*3 (5)	250	Opp	45		7-A-187		7170-3X
489XFAHX-*3 (6)	250	Opp	56		8-A-062		328170-190X	442XFAHX-*3 (6)	250	Opp	56		7-A-187		7170-3X
489XHAHX-*3 (7)	250	Opp	65		8-A-062		328170-190X	442XHAHX-*3 (7)	250	Opp	65		7-A-187		7170-3X
489XLAHX-*3 (8)	250	Opp	72		8-A-062		328170-190X	442XLAHX-*3 (8)	250	Opp	72		7-A-187		7170-3X
489XQAHX-*3 (8)	225	Opp	78		8-A-062		328170-190X	442XQAHX-*3 (8)	225	Opp	78		7-A-187		7170-3X
489XRAHX-*3 (8)	225	Opp	90		8-A-062		328170-190X	442XRAHX-*3 (8)	225	Opp	90		7-A-187		7170-3X
489XSAHX-*3 (8)	200	Opp	107		8-A-062		328170-190X	442XSAHX-*3 (8)	200	Opp	107		7-A-187		7170-3X
489XUAHX-*3 (8)	195	Opp	128		8-A-062		328170-190X	442XUAHX-*3 (8)	195	Opp	128		7-A-187		7170-3X
489XWAHX-*3 (8)	175	Opp	151		8-A-062		328170-190X	442XWAHX-*3 (8)	175	Opp	151		7-A-187		7170-3X
489XXAHX-*3 (8)	140	Opp	178		8-A-062		328170-190X	442XXAHX-*3 (8)	140	Opp	178		7-A-187		7170-3X
680XFAHX-*3 (9)	375	Opp	56		8-A-062		328170-190X	660XFAHX-*3 (9)	375	Opp	56		7-A-187		7170-3X
680XQAHX-*3 (10)	375	Opp	78		8-A-062		328170-190X	660XQAHX-*3 (10)	375	Opp	78		7-A-187		7170-3X
680XSAHX-*3 (11)	325	Opp	107		8-A-062		328170-190X	660XSAHX-*3 (11)	325	Opp	107		7-A-187		7170-3X
880XBAHX-*3 (12)	500	Opp	38		8-A-062		328170-15X								
880XDAHX-*3 (13)	500	Opp	45		8-A-062		328170-15X								
880XGAHX-*3 (14)	500	Opp	49		8-A-062		328170-15X								
880XJAHX-*3 (15)	500	Opp	58		8-A-062		328170-15X								
880XMAHX-*3 (16)	500	Opp	68		8-A-062		328170-15X								
880XQAHX-*3 (17)	450	Opp	80		8-A-062		328170-15X								
880XRAHX-*3 (18)	400	Opp	94		8-A-062		328170-15X								
880XTAHX-*3 (19)	350	Opp	120		8-A-062		328170-15X								

Continued Next Page

CAUTION: Do not use geared adapters with 442 "A" and "C" ratios.

CAUTION: 660/680 Series: Applications above 1500 RPM output shaft speed, contact Chelsea Technical Service for approval.

NOTE: All P.T.O. speeds are shown with the transmission in low range. Multiply the speeds shown by 1.29 with the transmission in high range.

NOTE: The AK & XK output flanges can not be used with the "A" & "C" ratios on the 489 Series P.T.O.s due to mounting stud interference. Use a RA or RB rotatable flange for the XK and the RA for the AK flange.

NOTE: If Ordering the 230/231 Series with the Shaft Brake Option, order the "BA" Output for Automatic Transmissions and the "BD" Output for Manual Transmissions.

(1) Gear and Shaft Kit No. KXA-2-P-565
(2) Filler block furnished with P.T.O. but not required
(3) Filler block furnished with P.T.O.
(4) Input Gear Part No. 5-P-1280
(5) Input Gear Part No. 5-P-1287
(6) Input Gear Part No. 5-P-1077
(7) Input Gear Part No. 5-P-1364
(8) Input Gear Part No. 5-P-1004
(9) Input Gear Part No. 5-P-1242
(10) Input Gear Part No. 5-P-1246
(11) Input Gear Part No. 5-P-1322
(12) Input Gear Part No. 5-P-1100
(13) Input Gear Part No. 5-P-1101
(14) Input Gear Part No. 5-P-1135
(15) Input Gear Part No. 5-P-1102
(16) Input Gear Part No. 5-P-1103
(17) Input Gear Part No. 5-P-1385
(18) Input Gear Part No. 5-P-1104
(19) Input Gear Part No. 5-P-1105

TSP120-12A

BOTTOM SIDE ONLY	RIGHT SIDE ONLY
TRANSMISSION GEAR DATA: BOT 8-Bolt Opening Gear FORWARD of Centerline 51 Teeth - SPUR **PITCH LINE TO APERTURE FACE:** .8160" (20.7264MM)	**TRANSMISSION GEAR DATA:** R.H. 6-Bolt Opening Gear FORWARD of Centerline 51 Teeth - SPUR **PITCH LINE TO APERTURE FACE:** .9710" (24.6634MM)

Caution: Application Approval Required for P.T.O. Output Shaft Speeds Above 2500 R.P.M.

BOTTOM Side P.T.O. Model	Inter. Torq.	Dir. Rot.	Engine % Hi	Engine % Rev	Filler Block	Adapter Assy.	Stud Kit	RIGHT Side P.T.O. Model	Inter. Torq.	Dir. Rot.	Engine % Hi	Engine % Rev	Filler Block	Adapter Assy.	Stud Kit
ONE SPEED - TWO GEAR - POWERSHIFT (AIR)															
230XKAJX-*3	250	Opp	60		7-A-093	328481X	328170-173X	230XKAJX-*3	250	Opp	60		7-A-187		328170-175X
230XQAJX-*3	250	Opp	80		7-A-093	328481X	328170-173X	230XQAJX-*3	250	Opp	80		7-A-187		328170-175X
230XUAJX-*3	225	Opp	127		7-A-093	328481X	328170-173X	230XUAJX-*3	225	Opp	127		7-A-187		328170-175X
885XBAHX-*3 (12)	500	Opp	38		8-A-062		328170-15X	236XDAHX-*3 (8)	250	Opp	58		7-A-187		7170-3X
885XGAHX-*3 (14)	500	Opp	49		8-A-062		328170-15X	236XKAHX-*3 (8)	250	Opp	75		7-A-187		7170-3X
885XJAHX-*3 (15)	500	Opp	58		8-A-062		328170-15X	236XQAHX-*3 (8)	250	Opp	101		7-A-187		7170-3X
885XMAHX-*3 (16)	500	Opp	68		8-A-062		328170-15X	236XUAHX-*3 (8)	225	Opp	116		7-A-187		7170-3X
ONE SPEED - FORWARD & REVERSE															
352XSAHX-*3 (8)	140	Opp	109	141	7-A-062	328481X	328170-76X	352XSAHX-*3 (8)	140	Opp	109	141	7-A-187		7170-3X
ONE SPEED - DUAL SHAFT															
452XSAHX-*3 (8)	140	Opp	109		7-A-062	328481X	328170-76X	452XSAHX-*3 (8)	140	Opp	109		7-A-187		7170-3X

CAUTION: Do not use geared adapters with 442 "A" and "C" ratios.

CAUTION: 660/680 Series: Applications above 1500 RPM output shaft speed, contact Chelsea Technical Service for approval.

NOTE: All P.T.O. speeds are shown with the transmission in low range. Multiply the speeds shown by 1.29 with the transmission in high range.

NOTE: The AK & XK output flanges can not be used with the "A" & "C" ratios on the 489 Series P.T.O.s due to mounting stud interference. Use a RA or RB rotatable flange for the XK and the RA for the AK flange.

NOTE: If Ordering the 230/231 Series with the Shaft Brake Option, order the "BA" Output for Automatic Transmissions and the "BD" Output for Manual Transmissions.

(8) Input Gear Part No. 5-P-1004
(12) Input Gear Part No. 5-P-1100
(14) Input Gear Part No. 5-P-1135
(15) Input Gear Part No. 5-P-1102
(16) Input Gear Part No. 5-P-1103

Parker Hannifin Corporation
Chelsea Products Division
Olive Branch, MS 38654 USA

TSPO155-16A

BOTTOM SIDE ONLY

TRANSMISSION GEAR DATA:
BOT 6-Bolt Opening Gear FORWARD of Centerline
54 Teeth - SPUR

PITCH LINE TO APERTURE FACE:
.5660" (14.3764MM)

RIGHT SIDE ONLY

TRANSMISSION GEAR DATA:
R.H. 6-Bolt Opening Gear FORWARD of Centerline
54 Teeth - SPUR

PITCH LINE TO APERTURE FACE:
.7210" (18.3134MM)

Caution: Application Approval Required for P.T.O. Output Shaft Speeds Above 2500 R.P.M.

BOTTOM Side P.T.O. Model	Inter. Torq.	Dir. Rot.	Engine % Hi	Engine % Rev	Filler Block	Adapter Assy.	Stud Kit	RIGHT Side P.T.O. Model	Inter. Torq.	Dir. Rot.	Engine % Hi	Engine % Rev	Filler Block	Adapter Assy.	Stud Kit
ONE SPEED - SINGLE GEAR - MECHANICAL SHIFT															
100XRAHX-*3 (1)	125	Eng	128			328564X	Furnished	100XRAHX-*3 (1)	125	Eng	128		7-A-300		328291-3X
812XKAHX-*5	400	Eng	86		8-A-165		Furnished								
ONE SPEED - TWO GEAR - MECHANICAL SHIFT															
221XCAHX-*5	250	Opp	57		7-A-032 (2)	328564X	Furnished	221XCAHX-*3	250	Opp	57		7-A-350 7-A-032 (3)		328170-35X
221XEAHX-*5	250	Opp	66		7-A-062	310778X	Furnished	221XEAHX-*3	250	Opp	66		7-A-300		328170-35X
221XLAHX-*5	200	Opp	89		7-A-062	310778X	Furnished	221XLAHX-*3	200	Opp	89		7-A-300		328170-35X
221XPAHX-*5	200	Opp	107		7-A-062	310778X	Furnished	221XPAHX-*3	200	Opp	107		7-A-300		328170-35X
489XAAHX-*3 (4)	250	Opp	50		8-A-062 8-A-093		328170-8X	442XAAHX-*3 (4)	250	Opp	50		7-A-300		7170-5X
489XCAHX-*3 (5)	250	Opp	64		8-A-062 8-A-093		328170-8X	442XCAHX-*3 (5)	250	Opp	64		7-A-300		7170-5X
489XFAHX-*3 (6)	250	Opp	80		8-A-062 8-A-093		328170-8X	442XFAHX-*3 (6)	250	Opp	80		7-A-300		7170-5X
489XHAHX-*3 (7)	250	Opp	93		8-A-062 8-A-093		328170-8X	442XHAHX-*3 (7)	250	Opp	93		7-A-300		7170-5X
489XLAHX-*5 (8)	250	Opp	103		8-A-062 8-A-093		328170-8X	442XLAHX-*3 (8)	250	Opp	103		7-A-300		7170-5X
489XQAHX-*5 (8)	225	Opp	111		8-A-062 8-A-093		328170-8X	442XQAHX-*3 (8)	225	Opp	111		7-A-300		7170-5X
489XRAHX-*5 (8)	225	Opp	128		8-A-062 8-A-093		328170-8X	442XRAHX-*3 (8)	225	Opp	128		7-A-300		7170-5X
489XSAHX-*5 (8)	200	Opp	153		8-A-062 8-A-093		328170-8X	442XSAHX-*3 (8)	200	Opp	153		7-A-300		7170-5X
489XUAHX-*5 (8)	195	Opp	182		8-A-062 8-A-093		328170-8X	442XUAHX-*3 (8)	195	Opp	182		7-A-300		7170-5X
489XWAHX-*5 (8)	175	Opp	214		8-A-062 8-A-093		328170-8X	442XWAHX-*3 (8)	175	Opp	214		7-A-300		7170-5X
489XXAHX-*5 (8)	140	Opp	254		8-A-062 8-A-093		328170-8X	442XXAHX-*3 (8)	140	Opp	254		7-A-300		7170-5X
680XFAHX-*3 (9)	375	Opp	80		8-A-062 8-A-093		328170-8X	660XFAHX-*3 (9)	375	Opp	80		7-A-300		7170-5X

Continued Next Page

CAUTION: Do not use geared adapters with 442 "A" and "C" ratios.

CAUTION: 660/680 Series: Applications above 1500 RPM output shaft speed, contact Chelsea Technical Service for approval.

NOTE: All P.T.O. speeds are shown with the transmission in high. Multiply speeds shown by .845 if the transmission is in low range.

NOTE: The AK & XK output flanges can not be used with the "A" & "C" ratios on the 489 Series P.T.O.s due to mounting stud interference. Use a RA or RB rotatable flange for the XK and the RA for the AK flange.

NOTE: If Ordering the 230/231 Series with the Shaft Brake Option, order the "BA" Output for Automatic Transmissions and the "BD" Output for Manual Transmissions.

(1) Gear and Shaft Kit No. KXA-2-P-565
(2) Filler block furnished with P.T.O.
(3) Filler block furnished with P.T.O. but not required
(4) Input Gear Part No. 5-P-1280
(5) Input Gear Part No. 5-P-1287
(6) Input Gear Part No. 5-P-1077
(7) Input Gear Part No. 5-P-1364
(8) Input Gear Part No. 5-P-1004
(9) Input Gear Part No. 5-P-1242

Parker Hannifin Corporation
Chelsea Products Division
Olive Branch, MS 38654 USA

TSPO155-16A

BOTTOM SIDE ONLY

TRANSMISSION GEAR DATA:
BOT 6-Bolt Opening Gear FORWARD of Centerline
54 Teeth - SPUR

PITCH LINE TO APERTURE FACE:
.5660" (14.3764MM)

RIGHT SIDE ONLY

TRANSMISSION GEAR DATA:
R.H. 6-Bolt Opening Gear FORWARD of Centerline
54 Teeth - SPUR

PITCH LINE TO APERTURE FACE:
.7210" (18.3134MM)

Caution: Application Approval Required for P.T.O. Output Shaft Speeds Above 2500 R.P.M.

BOTTOM Side P.T.O. Model	Inter. Torq.	Dir. Rot.	Engine % Hi	Engine % Rev	Filler Block	Adapter Assy.	Stud Kit	RIGHT Side P.T.O. Model	Inter. Torq.	Dir. Rot.	Engine % Hi	Engine % Rev	Filler Block	Adapter Assy.	Stud Kit
ONE SPEED - TWO GEAR - MECHANICAL SHIFT															
680XQAHX-*5 (10)	375	Opp	111		8-A-062 8-A-093		328170-8X	660XQAHX-*3 (10)	375	Opp	111		7-A-300		7170-5X
680XSAHX-*5 (11)	325	Opp	153		8-A-062 8-A-093		328170-8X	660XSAHX-*3 (11)	325	Opp	153		7-A-300		7170-5X
880XBAHX-*3 (12)	500	Opp	54		8-A-165		328170-14X								
880XDAHX-*3 (13)	500	Opp	64		8-A-165		328170-14X								
880XGAHX-*3 (14)	500	Opp	70		8-A-165		328170-14X								
880XJAHX-*3 (15)	500	Opp	82		8-A-165		328170-14X								
880XMAHX-*3 (16)	500	Opp	96		8-A-165		328170-14X								
880XQAHX-*3 (17)	450	Opp	113		8-A-165		328170-14X								
880XRAHX-*3 (18)	400	Opp	133		8-A-165		328170-14X								
880XTAHX-*3 (19)	350	Opp	171		8-A-165		328170-14X								
ONE SPEED - TWO GEAR - POWERSHIFT (AIR)															
230XKAJX-*3	250	Opp	85			328564X	Furnished	230XKAJX-*3	250	Opp	85		7-A-300		328170-172X
230XQAJX-*3	250	Opp	113			328564X	Furnished	230XQAJX-*3	250	Opp	113		7-A-300		328170-172X
230XUAJX-*3	225	Opp	181			328564X	Furnished	230XUAJX-*3	225	Opp	181		7-A-300		328170-172X
885XBAHX-*3 (12)	500	Opp	54		8-A-165		328170-14X	236XDAHX-*3 (8)	250	Opp	83		7-A-300		7170-5X
885XGAHX-*3 (14)	500	Opp	70		8-A-165		328170-14X	236XKAHX-*3 (8)	250	Opp	106		7-A-300		7170-5X
885XJAHX-*3 (15)	500	Opp	82		8-A-165		328170-14X	236XQAHX-*3 (8)	250	Opp	144		7-A-300		7170-5X
885XMAHX-*3 (16)	500	Opp	96		8-A-165		328170-14X	236XUAHX-*3 (8)	225	Opp	165		7-A-300		7170-5X
ONE SPEED - FORWARD & REVERSE															
340XFAHX-*5 (20)	200	Opp	70	73	7-A-140 (3)		328170-94X	340XFAHX-*5 (20)	200	Opp	70	73	7-A-270 7-A-140 (3)		7170-5X
352XSAHX-*5 (8)	140	Opp	155	200	7-A-062		Furnished	352XSAHX-*3 (8)	140	Opp	155	200	7-A-300		7170-5X
863XBAHX-*5	500	Opp	54	67	8-A-165		328170-14X								
ONE SPEED - DUAL SHAFT															
452XSAHX-*3 (8)	140	Opp	155		7-A-062		Furnished	452XSAHX-*3 (8)	140	Opp	155		7-A-300		7170-5X

CAUTION: Do not use geared adapters with 442 "A" and "C" ratios.

CAUTION: 660/680 Series: Applications above 1500 RPM output shaft speed, contact Chelsea Technical Service for approval.

NOTE: All P.T.O. speeds are shown with the transmission in high. Multiply speeds shown by .845 if the transmission is in low range.

NOTE: The AK & XK output flanges can not be used with the "A" & "C" ratios on the 489 Series P.T.O.s due to mounting stud interference. Use a RA or RB rotatable flange for the XK and the RA for the AK flange.

NOTE: If Ordering the 230/231 Series with the Shaft Brake Option, order the "BA" Output for Automatic Transmissions and the "BD" Output for Manual Transmissions.

(3) Filler block furnished with P.T.O. but not required
(8) Input Gear Part No. 5-P-1004
(10) Input Gear Part No. 5-P-1246
(11) Input Gear Part No. 5-P-1322
(12) Input Gear Part No. 5-P-1100
(13) Input Gear Part No. 5-P-1101
(14) Input Gear Part No. 5-P-1135
(15) Input Gear Part No. 5-P-1102
(16) Input Gear Part No. 5-P-1103
(17) Input Gear Part No. 5-P-1385
(18) Input Gear Part No. 5-P-1104
(19) Input Gear Part No. 5-P-1105
(20) Input Gear Part No. 5-P-581

June 2008

Parker Hannifin Corporation
Chelsea Products Division
Olive Branch, MS 38654 USA

CM50-HD

LEFT SIDE ONLY	RIGHT SIDE ONLY
TRANSMISSION GEAR DATA: L.H. 6-Bolt Opening Gear FORWARD of Centerline 43 Teeth - R.H. HELIX **PITCH LINE TO APERTURE FACE:** .5600" (14.2240MM)	**TRANSMISSION GEAR DATA:** R.H. 8-Bolt Opening Gear FORWARD of Centerline 43 Teeth - R.H. HELIX **PITCH LINE TO APERTURE FACE:** .2840" (7.2136MM)

Caution: Application Approval Required for P.T.O. Output Shaft Speeds Above 2500 R.P.M.

LEFT Side P.T.O. Model	Inter. Torq.	Dir. Rot.	Engine % Hi	Engine % Rev	Filler Block	Adapter Assy.	Stud Kit	RIGHT Side P.T.O. Model	Inter. Torq.	Dir. Rot.	Engine % Hi	Engine % Rev	Filler Block	Adapter Assy.	Stud Kit
ONE SPEED - SINGLE GEAR - MECHANICAL SHIFT															
								100XRBGX-*3 (1)	125	Eng	96		7-A-300	328564X	7170-13X
ONE SPEED - TWO GEAR - MECHANICAL SHIFT															
442XFBGX-*5 (2)	250	Opp	57		7-A-562		7170-7X	489XFBGX-*3 (2)	250	Opp	57		8-A-375 8-A-093		328170-192X
442XLBGX-*5 (3)	250	Opp	73		7-A-562		7170-7X	489XLBGX-*3 (3)	250	Opp	73		8-A-375 8-A-093		328170-192X
442XQBGX-*5 (3)	225	Opp	79		7-A-562		7170-7X	489XQBGX-*3 (3)	225	Opp	79		8-A-375 8-A-093		328170-192X
442XRBGX-*5 (3)	225	Opp	92		7-A-562		7170-7X	489XRBGX-*3 (3)	225	Opp	92		8-A-375 8-A-093		328170-192X
442XSBGX-*5 (3)	200	Opp	109		7-A-562		7170-7X	489XSBGX-*3 (3)	200	Opp	109		8-A-375 8-A-093		328170-192X
442XUBGX-*5 (3)	195	Opp	130		7-A-562		7170-7X	489XUBGX-*3 (3)	195	Opp	130		8-A-375 8-A-093		328170-192X
442XWBGX-*5 (3)	175	Opp	153		7-A-562		7170-7X	489XWBGX-*3 (3)	175	Opp	153		8-A-375 8-A-093		328170-192X
442XXBGX-*5 (3)	140	Opp	181		7-A-562		7170-7X	489XXBGX-*3 (3)	140	Opp	181		8-A-375 8-A-093		328170-192X
660XFBGX-*5 (4)	375	Opp	57		7-A-562		7170-7X	680XFBGX-*3 (4)	375	Opp	57		8-A-375 8-A-093		328170-192X
660XQBGX-*5 (5)	375	Opp	79		7-A-562		7170-7X	680XQBGX-*3 (5)	375	Opp	79		8-A-375 8-A-093		328170-192X
660XSBGX-*5 (6)	325	Opp	109		7-A-562		7170-7X	680XSBGX-*3 (6)	325	Opp	109		8-A-375 8-A-093		328170-192X
								880XBBGX-*3 (7)	500	Opp	39		8-A-032		Furnished
								880XMBGX-*3 (8)	500	Opp	70		8-A-032		Furnished
								880XRBGX-*3 (9)	400	Opp	96		8-A-032		Furnished
								880XTBGX-*3 (10)	350	Opp	124		8-A-032		Furnished
ONE SPEED - TWO GEAR - POWERSHIFT (AIR)															
236XDBGX-*5 (3)	250	Opp	59		7-A-562		7170-7X								
236XKBGX-*5 (3)	250	Opp	76		7-A-562		7170-7X								
236XQBGX-*5 (3)	250	Opp	103		7-A-562		7170-7X								
236XUBGX-*5 (3)	225	Opp	118		7-A-562		7170-7X								

Continued Next Page

CAUTION: 660/680 Series: Applications above 1500 RPM output shaft speed, contact Chelsea Technical Service for approval

(1) Gear and Shaft Kit No. KXA-2-P-571
(2) Input Gear Part No. 5-P-1082
(3) Input Gear Part No. 5-P-1015
(4) Input Gear Part No. 5-P-1325
(5) Input Gear Part No. 5-P-1326
(6) Input Gear Part No. 5-P-1327
(7) Input Gear Part No. 5-P-1116
(8) Input Gear Part No. 5-P-1175
(9) Input Gear Part No. 5-P-1117
(10) Input Gear Part No. 5-P-1177

Parker Hannifin Corporation
Chelsea Products Division
Olive Branch, MS 38654 USA

CM50-HD

LEFT SIDE ONLY	RIGHT SIDE ONLY
TRANSMISSION GEAR DATA: L.H. 6-Bolt Opening Gear FORWARD of Centerline 43 Teeth - R.H. HELIX **PITCH LINE TO APERTURE FACE:** .5600" (14.2240MM)	**TRANSMISSION GEAR DATA:** R.H. 8-Bolt Opening Gear FORWARD of Centerline 43 Teeth - R.H. HELIX **PITCH LINE TO APERTURE FACE:** .2840" (7.2136MM)

Caution: Application Approval Required for P.T.O. Output Shaft Speeds Above 2500 R.P.M.

LEFT Side P.T.O. Model	Inter. Torq.	Dir. Rot.	Engine % Hi	Engine % Rev	Filler Block	Adapter Assy.	Stud Kit	RIGHT Side P.T.O. Model	Inter. Torq.	Dir. Rot.	Engine % Hi	Engine % Rev	Filler Block	Adapter Assy.	Stud Kit
ONE SPEED - FORWARD & REVERSE															
340XFBGX-*5 (11)	200	Opp	52	54	7-A-500 7-A-140 (12)		7170-6X	340XFBGX-*5 (11)	200	Opp	52	54	7-A-300 7-A-140 (12)	328564X	7170-5X
352XSBGX-*5 (3)	140	Opp	106	137	7-A-562		7170-7X	352XSBGX-*3 (3)	140	Opp	106	137	7-A-300	328564X	7170-5X
								863XBBGX-*3 (13)	500	Opp	39	48	8-A-032		Furnished
ONE SPEED - DUAL SHAFT															
452XSBGX-*3 (3)	140	Opp	106		7-A-562		7170-7X	452XSBGX-*3 (3)	140	Opp	106		7-A-300	328564X	7170-5X

CAUTION: 660/680 Series: Applications above 1500 RPM output shaft speed, contact Chelsea Technical Service for approval

(3) Input Gear Part No. 5-P-1015
(11) Input Gear Part No. 5-P-580
(12) Filler block furnished with P.T.O. but not required
(13) Input Gear Part No. 5-P-422

TSPO180-16SM

LEFT SIDE ONLY	RIGHT SIDE ONLY
TRANSMISSION GEAR DATA: L.H. 8-Bolt Opening Gear FORWARD of Centerline 84 Teeth - SPUR **PITCH LINE TO APERTURE FACE:** .3990" (10.1346MM)	**TRANSMISSION GEAR DATA:** R.H. 6-Bolt Opening Gear FORWARD of Centerline 84 Teeth - SPUR **PITCH LINE TO APERTURE FACE:** .5540" (14.0716MM)

Caution: Application Approval Required for P.T.O. Output Shaft Speeds Above 2500 R.P.M.

LEFT Side P.T.O. Model	Inter. Torq.	Dir. Rot.	Engine % Hi	Engine % Rev	Filler Block	Adapter Assy.	Stud Kit	RIGHT Side P.T.O. Model	Inter. Torq.	Dir. Rot.	Engine % Hi	Engine % Rev	Filler Block	Adapter Assy.	Stud Kit
ONE SPEED - TWO GEAR - MECHANICAL SHIFT															
489XLHWX-*5 (1)	250	Opp	92		8-A-375 8-A-032		328170-15X	442KLHWX-*3 (1)	250	Opp	92		7-A-550		7170-6X
489XQHWX-*5 (1)	225	Opp	99		8-A-375 8-A-032		328170-15X	442KQHWX-*3 (1)	225	Opp	99		7-A-550		7170-6X
489XRHWX-*5 (1)	225	Opp	114		8-A-375 8-A-032		328170-15X	442KRHWX-*3 (1)	225	Opp	114		7-A-550		7170-6X
489XSHWX-*5 (1)	200	Opp	136		8-A-375 8-A-032		328170-15X	442KSHWX-*3 (1)	195	Opp	136		7-A-550		7170-6X
489XUHWX-*5 (1)	195	Opp	162		8-A-375 8-A-032		328170-15X	442KUHWX-*3 (1)	195	Opp	162		7-A-550		7170-6X
489XWHWX-*5 (1)	175	Opp	190		8-A-375 8-A-032		328170-15X	442KWHWX-*3 (1)	175	Opp	190		7-A-550		7170-6X
489XXHWX-*5 (1)	140	Opp	225		8-A-375 8-A-032		328170-15X	442KXHWX-*3 (1)	140	Opp	225		7-A-550		7170-6X
ONE SPEED - FORWARD & REVERSE															
								352KSHWX-*3 (1)	195	Opp	138	178	7-A-550		7170-6X
ONE SPEED - DUAL SHAFT															
								452KSHWX-*3 (1)	195	Opp	138		7-A-550		7170-6X

(1) Input Gear Part No. 5-P-1235

TSPO180-18SM

LEFT SIDE ONLY	RIGHT SIDE ONLY
TRANSMISSION GEAR DATA: L.H. 8-Bolt Opening Gear FORWARD of Centerline 76 Teeth - SPUR **PITCH LINE TO APERTURE FACE:** .3740" (9.4996MM)	**TRANSMISSION GEAR DATA:** R.H. 6-Bolt Opening Gear FORWARD of Centerline 76 Teeth - SPUR **PITCH LINE TO APERTURE FACE:** .5290" (13.4366MM)

Caution: Application Approval Required for P.T.O. Output Shaft Speeds Above 2500 R.P.M.

LEFT Side P.T.O. Model	Inter. Torq.	Dir. Rot.	Engine % Hi	Engine % Rev	Filler Block	Adapter Assy.	Stud Kit	RIGHT Side P.T.O. Model	Inter. Torq.	Dir. Rot.	Engine % Hi	Engine % Rev	Filler Block	Adapter Assy.	Stud Kit
ONE SPEED - TWO GEAR - MECHANICAL SHIFT															
489XLHXX-*5 (1)	250	Opp	87		8-A-375		328170-15X	442KLHXX-*3 (1)	250	Opp	87		7-A-550		7170-6X
489XQHXX-*5 (1)	225	Opp	94		8-A-375		328170-15X	442KQHXX-*3 (1)	225	Opp	94		7-A-550		7170-6X
489XRHXX-*5 (1)	225	Opp	109		8-A-375		328170-15X	442KRHXX-*3 (1)	225	Opp	109		7-A-550		7170-6X
489XSHXX-*5 (1)	200	Opp	130		8-A-375		328170-15X	442KSHXX-*3 (1)	200	Opp	130		7-A-550		7170-6X
489XUHXX-*5 (1)	195	Opp	154		8-A-375		328170-15X	442KUHXX-*3 (1)	195	Opp	154		7-A-550		7170-6X
489XWHXX-*5 (1)	175	Opp	182		8-A-375		328170-15X	442KWHXX-*3 (1)	175	Opp	182		7-A-550		7170-6X
489XXHXX-*5 (1)	140	Opp	215		8-A-375		328170-15X	442KXHXX-*3 (1)	140	Opp	215		7-A-550		7170-6X
ONE SPEED - FORWARD & REVERSE															
								352KSHXX-*3 (1)	140	Opp	131	170	7-A-550		7170-6X
ONE SPEED - DUAL SHAFT															
								452KSHXX-*3 (1)	140	Opp	131		7-A-550		7170-6X

(1) Input Gear Part No. 5-P-1236

TSPO150-12A

BOTTOM SIDE ONLY

TRANSMISSION GEAR DATA:
BOT 8-Bolt Opening Gear FORWARD of Centerline
49 Teeth - SPUR
PITCH LINE TO APERTURE FACE:
.8770" (22.2758MM)

RIGHT SIDE ONLY

TRANSMISSION GEAR DATA:
R.H. 6-Bolt Opening Gear FORWARD of Centerline
49 Teeth - SPUR
PITCH LINE TO APERTURE FACE:
1.0330" (26.2382MM)

Caution: Application Approval Required for P.T.O. Output Shaft Speeds Above 2500 R.P.M.

BOTTOM Side P.T.O. Model	Inter. Torq.	Dir. Rot.	Engine % Hi	Engine % Rev	Filler Block	Adapter Assy.	Stud Kit	RIGHT Side P.T.O. Model	Inter. Torq.	Dir. Rot.	Engine % Hi	Engine % Rev	Filler Block	Adapter Assy.	Stud Kit
ONE SPEED - SINGLE GEAR - MECHANICAL SHIFT															
812ZKDDX-*3 (2)	400	Eng	80		8-A-295		328170-117X	100XRDDX-*3 (1)	125	Eng	127				Furnished
ONE SPEED - TWO GEAR - MECHANICAL SHIFT															
221ZCDDX-*3	250	Opp	61				Furnished	221ZCDDX-*3	250	Opp	61		7-A-093		328170-1X
221ZEDDX-*3	250	Opp	68				Furnished	221ZEDDX-*3	250	Opp	68		7-A-093		328170-1X
221ZLDDX-*3	200	Opp	92				Furnished	221ZLDDX-*3	200	Opp	92		7-A-093		328170-1X
221ZPDDX-*3	200	Opp	111				Furnished	221ZPDDX-*3	200	Opp	111		7-A-093		328170-1X
880XDDDX-*3 (4)	500	Opp	85		8-A-093		Furnished	442ZLDDX-*3 (3)	250	Opp	103		7-A-093		Furnished
880XMDDX-*3 (5)	500	Opp	85		8-A-093		Furnished	442ZQDDX-*3 (3)	225	Opp	111		7-A-093		Furnished
880XTDDX-*3 (6)	350	Opp	157		8-A-093		Furnished	442ZRDDX-*3 (3)	225	Opp	128		7-A-093		Furnished
								442ZSDDX-*3 (3)	200	Opp	153		7-A-093		Furnished
								442ZUDDX-*3 (3)	195	Opp	182		7-A-093		Furnished
								442ZWDDX-*3 (3)	175	Opp	214		7-A-093		Furnished
								442ZXDDX-*3 (3)	140	Opp	253		7-A-093		Furnished
ONE SPEED - FORWARD & REVERSE															
352ZSDDX-*3 (3)	140	Opp	155	200		328481X	Furnished	352ZSDDX-*3 (3)	140	Opp	155	200	7-A-093		Furnished
ONE SPEED - DUAL SHAFT															
452ZSDDX-*3 (3)	140	Opp	155			328481X	Furnished	452ZSDDX-*3 (3)	140	Opp	155		7-A-093		Furnished

NOTE: All P.T.O. speeds shown are with the transmission in low range. Multiply the speeds shown by 1.27 if the transmission is in high range.

(1) Gear and Shaft Kit No. KXA-2-P-604
(2) Input Gear Part No. 2-P-605
(3) Input Gear Part No. 5-P-1040
(4) Input Gear Part No. 5-P-1126
(5) Input Gear Part No. 5-P-1133
(6) Input Gear Part No. 5-P-1127

Parker Hannifin Corporation
Chelsea Products Division
Olive Branch, MS 38654 USA

TSPO145-14A

TSPO155-14HP

BOTTOM SIDE ONLY

TRANSMISSION GEAR DATA:

BOT 8-Bolt Opening Gear FORWARD of Centerline

56 Teeth - SPUR

PITCH LINE TO APERTURE FACE:

.3980" (10.1092MM)

RIGHT SIDE ONLY

TRANSMISSION GEAR DATA:

R.H. 6-Bolt Opening Gear FORWARD of Centerline

56 Teeth - SPUR

PITCH LINE TO APERTURE FACE:

.5530" (14.0462MM)

Caution: Application Approval Required for P.T.O. Output Shaft Speeds Above 2500 R.P.M.

BOTTOM Side P.T.O. Model	Inter. Torq.	Dir. Rot.	Engine % Hi	Engine % Rev	Filler Block	Adapter Assy.	Stud Kit	RIGHT Side P.T.O. Model	Inter. Torq.	Dir. Rot.	Engine % Hi	Engine % Rev	Filler Block	Adapter Assy.	Stud Kit
ONE SPEED - SINGLE GEAR - MECHANICAL SHIFT															
100KRAHX-*3 (1)	125	Eng	108		7-A-140	328564X	7170-10X	100XRAHX-*3 (1)	125	Eng	108		7-A-450		328291-4X
812XKAHX-*5	400	Eng	72		8-A-295		328170-59X								
ONE SPEED - TWO GEAR - MECHANICAL SHIFT															
489KFAHX-*5 (5)	250	Opp	67		8-A-350		328170-15X	221KPAHX-*3	200	Opp	90		7-A-450		328170-33X
489KHAHX-*5 (6)	250	Opp	78		8-A-350		328170-15X	221XCAHX-*3	250	Opp	48		7-A-500 7-A-032 (2)		328170-33X
489KLAHX-*5 (7)	250	Opp	87		8-A-248 8-A-062		328170-15X	221XEAHX-*3	250	Opp	56		7-A-450		328170-33X
489KQAHX-*5 (7)	225	Opp	94		8-A-248 8-A-062		328170-15X	221XLAHX-*3	200	Opp	75		7-A-450		328170-33X
489KRAHX-*5 (7)	225	Opp	108		8-A-248 8-A-062		328170-15X	221XPAHX-*3	200	Opp	90		7-A-450		328170-33X
489KSAHX-*5 (7)	200	Opp	129		8-A-248 8-A-062		328170-15X	442KAAHX-*3 (3)	250	Opp	42		7-A-450		7170-6X
489KUAHX-*5 (7)	195	Opp	154		8-A-248 8-A-062		328170-15X	442KCAHX-*3 (4)	250	Opp	54		7-A-450		7170-6X
489KWAHX-*5 (7)	175	Opp	181		8-A-248 8-A-062		328170-15X	442KFAHX-*3 (5)	250	Opp	67		7-A-450		7170-6X
489KXAHX-*5 (7)	140	Opp	214		8-A-248 8-A-062		328170-15X	442KHAHX-*3 (6)	250	Opp	78		7-A-450		7170-6X
680KFAHX-*5 (8)	375	Opp	67		8-A-350		328170-15X	442KLAHX-*3 (7)	250	Opp	87		7-A-450		7170-6X
680KQAHX-*5 (9)	375	Opp	94		8-A-248 8-A-062		328170-15X	442KQAHX-*3 (7)	225	Opp	94		7-A-450		7170-6X
680KSAHX-*5 (10)	325	Opp	129		8-A-248 8-A-062		328170-15X	442KRAHX-*3 (7)	225	Opp	108		7-A-450		7170-6X
880KBAHX-*3 (11)	500	Opp	46		8-A-295		328170-17X	442KSAHX-*3 (7)	200	Opp	129		7-A-450		7170-6X
880KDAHX-*3 (12)	500	Opp	54		8-A-295		328170-17X	442KUAHX-*3 (7)	195	Opp	154		7-A-450		7170-6X
880KGAHX-*3 (13)	500	Opp	59		8-A-295		328170-17X	442KWAHX-*3 (7)	175	Opp	181		7-A-450		7170-6X
880KJAHX-*3 (14)	500	Opp	69		8-A-295		328170-17X	442KXAHX-*3 (7)	140	Opp	214		7-A-450		7170-6X
880KMAHX-*3 (15)	500	Opp	81		8-A-295		328170-17X	660KFAHX-*3 (8)	375	Opp	67		7-A-450		7170-6X
880KQAHX-*3 (16)	450	Opp	95		8-A-295		328170-17X	660KQAHX-*3 (9)	375	Opp	94		7-A-450		7170-6X
880KRAHX-*3 (17)	400	Opp	112		8-A-295		328170-17X	660KSAHX-*3 (10)	325	Opp	129		7-A-450		7170-6X
880KTAHX-*3 (18)	350	Opp	144		8-A-295		328170-17X								

Continued Next Page

CAUTION: Do not use geared adapters with 442 "A" and "C" ratios.

CAUTION: 660/680 Series: Applications above 1500 RPM output shaft speed, contact Chelsea Technical Service for approval.

NOTE: Speeds shown are with the transmission splitter in low or hand valve in position 1 and 3. multiply the speeds shown by 1.26 if the transmission splitter is in high, or the hand valve is inposition 2 and 4.

(1) Gear and Shaft Kit No. KXA-2-P-565
(2) Filler block furnished with P.T.O. but not required
(3) Input Gear Part No. 5-P-1280
(4) Input Gear Part No. 5-P-1287
(5) Input Gear Part No. 5-P-1077
(6) Input Gear Part No. 5-P-1364
(7) Input Gear Part No. 5-P-1004
(8) Input Gear Part No. 5-P-1242
(9) Input Gear Part No. 5-P-1246
(10) Input Gear Part No. 5-P-1322
(11) Input Gear Part No. 5-P-1100
(12) Input Gear Part No. 5-P-1101
(13) Input Gear Part No. 5-P-1135
(14) Input Gear Part No. 5-P-1102
(15) Input Gear Part No. 5-P-1103
(16) Input Gear Part No. 5-P-1385
(17) Input Gear Part No. 5-P-1104
(18) Input Gear Part No. 5-P-1105

January 2008

Parker Hannifin Corporation
Chelsea Products Division
Olive Branch, MS 38654 USA

TSPO145-14A
TSPO155-14HP

BOTTOM SIDE ONLY	RIGHT SIDE ONLY
TRANSMISSION GEAR DATA: BOT 8-Bolt Opening Gear FORWARD of Centerline 56 Teeth - SPUR **PITCH LINE TO APERTURE FACE:** .3980" (10.1092MM)	**TRANSMISSION GEAR DATA:** R.H. 6-Bolt Opening Gear FORWARD of Centerline 56 Teeth - SPUR **PITCH LINE TO APERTURE FACE:** .5530" (14.0462MM)

Caution: Application Approval Required for P.T.O. Output Shaft Speeds Above 2500 R.P.M.

BOTTOM Side P.T.O. Model	Inter. Torq.	Dir. Rot.	Engine % Hi	Engine % Rev	Filler Block	Adapter Assy.	Stud Kit	RIGHT Side P.T.O. Model	Inter. Torq.	Dir. Rot.	Engine % Hi	Engine % Rev	Filler Block	Adapter Assy.	Stud Kit
ONE SPEED - TWO GEAR - POWERSHIFT (AIR)															
885KBAHX-*3 (11)	500	Opp	46		8-A-295		328170-17X	236KDAHX-*3 (7)	250	Opp	70		7-A-450		7170-6X
885KGAHX-*3 (13)	500	Opp	59		8-A-295		328170-17X	236KKAHX-*3 (7)	250	Opp	90		7-A-450		7170-6X
885KJAHX-*3 (14)	500	Opp	69		8-A-295		328170-17X	236KQAHX-*3 (7)	250	Opp	122		7-A-450		7170-6X
885KMAHX-*3 (15)	500	Opp	81		8-A-295		328170-17X	236KUAHX-*3 (7)	225	Opp	139		7-A-450		7170-6X
ONE SPEED - FORWARD & REVERSE															
863XBAHX-*5	500	Opp	46	57	8-A-295		328170-17X	340SFAHX-*5 (19)	200	Opp	59	62	7-A-450 7-A-140 (20)		7170-6X
								352XSAHX-*3 (7)	140	Opp	131	169	7-A-450		7170-6X
ONE SPEED - DUAL SHAFT															
								452XSAHX-*3 (7)	140	Opp	131		7-A-450		7170-6X

CAUTION: Do not use geared adapters with 442 "A" and "C" ratios.

CAUTION: 660/680 Series: Applications above 1500 RPM output shaft speed, contact Chelsea Technical Service for approval.

NOTE: Speeds shown are with the transmission splitter in low or hand valve in position 1 and 3. Multiply the speeds shown by 1.26 if the transmission splitter is in high, or the hand valve is inposition 2 and 4.

(7) Input Gear Part No. 5-P-1004
(11) Input Gear Part No. 5-P-1100
(13) Input Gear Part No. 5-P-1135
(14) Input Gear Part No. 5-P-1102
(15) Input Gear Part No. 5-P-1103
(19) Input Gear Part No. 5-P-581

(20) Filler block furnished with P.T.O.

TSPO165-18A
TSPO165-18HP
TSPO175-18M

BOTTOM SIDE ONLY

TRANSMISSION GEAR DATA:
BOT 8-Bolt Opening Gear FORWARD of Centerline
57 Teeth - SPUR

PITCH LINE TO APERTURE FACE:
.3160" (8.0264MM)

RIGHT SIDE ONLY

TRANSMISSION GEAR DATA:
R.H. 6-Bolt Opening Gear FORWARD of Centerline
57 Teeth - SPUR

PITCH LINE TO APERTURE FACE:
.4710" (11.9634MM)

Caution: Application Approval Required for P.T.O. Output Shaft Speeds Above 2500 R.P.M.

BOTTOM Side P.T.O. Model	Inter. Torq.	Dir. Rot.	Engine % Hi	Engine % Rev	Filler Block	Adapter Assy.	Stud Kit	RIGHT Side P.T.O. Model	Inter. Torq.	Dir. Rot.	Engine % Hi	Engine % Rev	Filler Block	Adapter Assy.	Stud Kit
ONE SPEED - SINGLE GEAR - MECHANICAL SHIFT															
100KRAHX-*3 (1)	125	Eng	100		7-A-140	328564X	8000-13X	100XRAHX-*3 (1)	125	Eng	100		7-A-450		7170-13X
812XKAHX-*5	400	Eng	67		8-A-295		328170-159X								
ONE SPEED - TWO GEAR - MECHANICAL SHIFT															
489KFAHX-*5 (5)	250	Opp	62		8-A-248 8-A-093		328170-129X	221XCAHX-*3	250	Opp	45		7-A-500 7-A-032 (2)		328170-33X
489KHAHX-*5 (6)	250	Opp	72		8-A-248 8-A-093		328170-129X	221XEAHX-*3	250	Opp	51		7-A-450		328170-33X
489KLAHX-*5 (7)	250	Opp	80		8-A-248 8-A-093		328170-129X	221XLAHX-*3	200	Opp	69		7-A-450		328170-33X
489KQAHX-*5 (7)	225	Opp	86		8-A-248 8-A-093		328170-129X	221XPAHX-*3	200	Opp	83		7-A-450		328170-33X
489KRAHX-*5 (7)	225	Opp	100		8-A-248 8-A-093		328170-129X	442KAAHX-*3 (3)	250	Opp	39		7-A-450		7170-5X
489KSAHX-*5 (7)	200	Opp	119		8-A-248 8-A-093		328170-129X	442KCAHX-*3 (4)	250	Opp	50		7-A-450		7170-5X
489KUAHX-*5 (7)	195	Opp	142		8-A-248 8-A-093		328170-129X	442KFAHX-*3 (5)	250	Opp	62		7-A-450		7170-5X
489KWAHX-*5 (7)	175	Opp	167		8-A-248 8-A-093		328170-129X	442KHAHX-*3 (6)	250	Opp	72		7-A-450		7170-5X
489KXAHX-*5 (7)	140	Opp	197		8-A-248 8-A-093		328170-129X	442KLAHX-*3 (7)	250	Opp	80		7-A-450		7170-5X
680KFAHX-*5 (8)	375	Opp	62		8-A-248 8-A-093		328170-129X	442KQAHX-*3 (7)	225	Opp	86		7-A-450		7170-5X
680KQAHX-*5 (9)	375	Opp	86		8-A-248 8-A-093		328170-129X	442KRAHX-*3 (7)	225	Opp	100		7-A-450		7170-5X
680KSAHX-*5 (10)	325	Opp	119		8-A-248 8-A-093		328170-129X	442KSAHX-*3 (7)	200	Opp	119		7-A-450		7170-5X
880KBAHX-*3 (11)	500	Opp	42		8-A-295 8-A-032		328170-129X	442KUAHX-*3 (7)	195	Opp	142		7-A-450		7170-5X
880KDAHX-*3 (12)	500	Opp	50		8-A-295 8-A-032		328170-129X	442KWAHX-*3 (7)	175	Opp	167		7-A-450		7170-5X
880KGAHX-*3 (13)	500	Opp	54		8-A-295 8-A-032		328170-129X	442KXAHX-*3 (7)	140	Opp	197		7-A-450		7170-5X

Continued Next Page

CAUTION: Do not use geared adapters with 442 "A" and "C" ratios.

CAUTION: 660/680 Series: Applications above 1500 RPM output shaft speed, contact Chelsea Technical Service for approval.

NOTE: Speeds shown are with the transmission splitter in low or hand valve in position 1 and 3. ultiply speeds shown by 1.187 if the transmission splitter is in high or hand valve is in position 2 and 4.

(1) Gear and Shaft Kit No. KXA-2-P-565
(2) Filler block furnished with P.T.O. but not required
(3) Input Gear Part No. 5-P-1280
(4) Input Gear Part No. 5-P-1287
(5) Input Gear Part No. 5-P-1077
(6) Input Gear Part No. 5-P-1364
(7) Input Gear Part No. 5-P-1004
(8) Input Gear Part No. 5-P-1242
(9) Input Gear Part No. 5-P-1246
(10) Input Gear Part No. 5-P-1322
(11) Input Gear Part No. 5-P-1100
(12) Input Gear Part No. 5-P-1101
(13) Input Gear Part No. 5-P-1135

TSPO165-18A
TSPO165-18HP
TSPO175-18M

BOTTOM SIDE ONLY

TRANSMISSION GEAR DATA:
BOT 8-Bolt Opening Gear FORWARD of Centerline
57 Teeth - SPUR
PITCH LINE TO APERTURE FACE:
.3160" (8.0264MM)

RIGHT SIDE ONLY

TRANSMISSION GEAR DATA:
R.H. 6-Bolt Opening Gear FORWARD of Centerline
57 Teeth - SPUR
PITCH LINE TO APERTURE FACE:
.4710" (11.9634MM)

Caution: Application Approval Required for P.T.O. Output Shaft Speeds Above 2500 R.P.M.

BOTTOM Side P.T.O. Model	Inter. Torq.	Dir. Rot.	Engine % Hi	Engine % Rev	Filler Block	Adapter Assy.	Stud Kit	RIGHT Side P.T.O. Model	Inter. Torq.	Dir. Rot.	Engine % Hi	Engine % Rev	Filler Block	Adapter Assy.	Stud Kit
ONE SPEED - TWO GEAR - MECHANICAL SHIFT															
880KJAHX-*3 (14)	500	Opp	64		8-A-295 8-A-032		328170-129X	660KFAHX-*3 (8)	375	Opp	62		7-A-450		7170-5X
880KMAHX-*3 (15)	500	Opp	75		8-A-295 8-A-032		328170-129X	660KQAHX-*3 (9)	375	Opp	86		7-A-450		7170-5X
880KQAHX-*3 (16)	450	Opp	88		8-A-295 8-A-032		328170-129X	660KSAHX-*3 (10)	325	Opp	119		7-A-450		7170-5X
880KRAHX-*3 (17)	400	Opp	104		8-A-295 8-A-032		328170-129X								
880KTAHX-*3 (18)	350	Opp	133		8-A-295 8-A-032		328170-129X								
ONE SPEED - TWO GEAR - POWERSHIFT (AIR)															
885KBAHX-*3 (11)	500	Opp	42		8-A-295 8-A-032		328170-129X	236KDAHX-*3 (7)	250	Opp	65		7-A-450		7170-5X
885KGAHX-*3 (13)	500	Opp	54		8-A-295 8-A-032		328170-129X	236KKAHX-*3 (7)	250	Opp	83		7-A-450		7170-5X
885KJAHX-*3 (14)	500	Opp	64		8-A-295 8-A-032		328170-129X	236KQAHX-*3 (7)	250	Opp	112		7-A-450		7170-5X
885KMAHX-*3 (15)	500	Opp	75		8-A-295 8-A-032		328170-129X	236KUAHX-*3 (7)	225	Opp	128		7-A-450		7170-5X
ONE SPEED - FORWARD & REVERSE															
863XBAHX-*5	500	Opp	42	52	8-A-295 8-A-032		328170-129X	340SFAHX-*5 (19)	200	Opp	54	57	7-A-450 7-A-140 (2)		7170-4X
								352XSAHX-*3 (7)	140	Opp	121	156	7-A-450		7170-5X
ONE SPEED - DUAL SHAFT															
								452KSAHX-*3 (7)	140	Opp	121		7-A-450		7170-5X

CAUTION: Do not use geared adapters with 442 "A" and "C" ratios.

CAUTION: 660/680 Series: Applications above 1500 RPM output shaft speed, contact Chelsea Technical Service for approval.

NOTE: Speeds shown are with the transmission splitter in low or hand valve in position 1 and 3. Multiply speeds shown by 1.187 if the transmission splitter is in high or hand valve is in position 2 and 4.

(2) Filler block furnished with P.T.O. but not required
(7) Input Gear Part No. 5-P-1004
(8) Input Gear Part No. 5-P-1242
(9) Input Gear Part No. 5-P-1246
(10) Input Gear Part No. 5-P-1322
(11) Input Gear Part No. 5-P-1100
(13) Input Gear Part No. 5-P-1135
(14) Input Gear Part No. 5-P-1102
(15) Input Gear Part No. 5-P-1103
(16) Input Gear Part No. 5-P-1385
(17) Input Gear Part No. 5-P-1104
(18) Input Gear Part No. 5-P-1105
(19) Input Gear Part No. 5-P-581

AS56-7B

ES56-7B

LEFT SIDE ONLY	RIGHT SIDE ONLY
TRANSMISSION GEAR DATA: L.H. 6-Bolt Opening Gear FORWARD of Centerline 34 Teeth - R.H. HELIX **PITCH LINE TO APERTURE FACE:** 1.3960" (35.4700MM)	**TRANSMISSION GEAR DATA:** R.H. 6-Bolt Opening Gear FORWARD of Centerline 34 Teeth - R.H. HELIX **PITCH LINE TO APERTURE FACE:** 1.3960" (35.4700MM)

Caution: Application Approval Required for P.T.O. Output Shaft Speeds Above 2500 R.P.M.

LEFT Side P.T.O. Model	Inter. Torq.	Dir. Rot.	Engine % Hi	Engine % Rev	Filler Block	Adapter Assy.	Stud Kit	RIGHT Side P.T.O. Model	Inter. Torq.	Dir. Rot.	Engine % Hi	Engine % Rev	Filler Block	Adapter Assy.	Stud Kit
ONE SPEED - TWO GEAR - MECHANICAL SHIFT															
442ZFJUX-*5 (1)	250	Opp	37				Furnished	442ZFJUX-*3 (1)	250	Opp	37				Furnished
442ZLJUX-*5 (2)	250	Opp	49				Furnished	442ZLJUX-*3 (2)	250	Opp	49				Furnished
442ZQJUX-*5 (2)	225	Opp	53				Furnished	442ZQJUX-*3 (2)	225	Opp	53				Furnished
442ZRJUX-*5 (2)	225	Opp	61				Furnished	442ZRJUX-*3 (2)	225	Opp	61				Furnished
442ZSJUX-*5 (2)	200	Opp	73				Furnished	442ZSJUX-*3 (2)	200	Opp	73				Furnished
442ZUJUX-*5 (2)	195	Opp	86				Furnished	442ZUJUX-*3 (2)	195	Opp	86				Furnished
442ZWJUX-*5 (2)	175	Opp	102				Furnished	442ZWJUX-*3 (2)	175	Opp	102				Furnished
442ZXJUX-*5 (2)	140	Opp	120				Furnished	442ZXJUX-*3 (2)	140	Opp	120				Furnished
ONE SPEED - TWO GEAR - POWERSHIFT (AIR)															
236ZDJUX-*5 (2)	250	Opp	40				Furnished	236ZDJUX-*3 (2)	250	Opp	40				Furnished
236ZKJUX-*5 (2)	250	Opp	51				Furnished	236ZKJUX-*3 (2)	250	Opp	51				Furnished
236ZQJUX-*5 (2)	250	Opp	68				Furnished	236ZQJUX-*3 (2)	250	Opp	68				Furnished
236ZUJUX-*5 (2)	225	Opp	78				Furnished	236ZUJUX-*3 (2)	225	Opp	78				Furnished
ONE SPEED - FORWARD & REVERSE															
340ZFJUX-*5 (3)	200	Opp	34	36			Furnished	340ZFJUX-*5 (3)	200	Opp	34	36			Furnished
352ZSJUX-*5 (2)	140	Opp	73	95			Furnished	352ZSJUX-*3 (2)	140	Opp	73	95			Furnished
ONE SPEED - DUAL SHAFT															
452ZSJUX-*5 (2)	140	Opp	73				Furnished	452ZSJUX*3 (2)	140	Opp	73				Furnished
GEARED ADAPTERS															
626ZJUX-4KA							Furnished	626ZJUX-3KA							Furnished
630ZJUX-4KA							Furnished	630ZJUX-3KA							Furnished
645ZJUX-4KA							Furnished	645ZJUX-3KA							Furnished

NOTE: The 626 and 645 Series adapters can not be used with the 442 Series "F" ratio.

NOTE: When using a 626 or 645 deep mount adapter on this transmission, you must use a standard mount 442 Series P.T.O. (example:442XLJUX-*5). Replace the 5-P-1316 gear in the 442X Series with 5-P-1318 and put 5-P-1316 gear in the deep mount adapter. Mount the P.T.O. to the adapter with a 7-A-200 spacer and a 7170-4X stud kit.

(1) Input Gear Part No. 5-P-1317
(2) Input Gear Part No. 5-P-1316
(3) Input Gear Part No. 5-P-1377

Parker Hannifin Corporation
Chelsea Products Division
Olive Branch, MS 38654 USA

TDET0880
TDET1361
TDET1664
TR-4050

RIGHT SIDE ONLY

TRANSMISSION GEAR DATA:
R.H. 6-Bolt Opening Gear FORWARD of Centerline
32 Teeth - R.H. HELIX

PITCH LINE TO APERTURE FACE:
1.1400" (28.9342MM)

Caution: Application Approval Required for P.T.O. Output Shaft Speeds Above 2500 R.P.M.

P.T.O. Model	Inter. Torq.	Dir. Rot.	Engine % Hi	Engine % Rev	Filler Block	Adapter Assy.	Stud Kit	RIGHT Side P.T.O. Model	Inter. Torq.	Dir. Rot.	Engine % Hi	Engine % Rev	Filler Block	Adapter Assy.	Stud Kit
ONE SPEED - TWO GEAR - MECHANICAL SHIFT															
								442XLKNX-*3 (1)	250	Opp	49				Furnished
								442XQKNX-*3 (1)	225	Opp	53				Furnished
								442XRKNX-*3 (1)	225	Opp	61				Furnished
								442XSKNX-*3 (1)	200	Opp	73				Furnished
								442XUKNX-*3 (1)	195	Opp	87				Furnished
								442XWKNX-*3 (1)	175	Opp	102				Furnished
								442XXKNX-*3 (1)	140	Opp	121				Furnished
GEARED ADAPTERS															
								626XKNX-3KP							7170-4X
								630XKNX-3KP							7170-4X
								645XKNX-3KP							7170-4X

(1) Input Gear Part No. 5-P-1383

Parker Hannifin Corporation
Chelsea Products Division
Olive Branch, MS 38654 USA

PSDO165-18A
PSDO185-18A
PSDO205-18A

BOTTOM SIDE ONLY

TRANSMISSION GEAR DATA:
BOT 8-Bolt Opening Gear FORWARD of Centerline
52 Teeth - SPUR

PITCH LINE TO APERTURE FACE:
0.9280" (23.5700MM)

RIGHT SIDE ONLY

TRANSMISSION GEAR DATA:
R.H. 6-Bolt Opening Gear REAR of Centerline
52 Teeth - SPUR

PITCH LINE TO APERTURE FACE:
1.2280" (31.1900MM)

Caution: Application Approval Required for P.T.O. Output Shaft Speeds Above 2500 R.P.M.

ONE SPEED - TWO GEAR - MECHANICAL SHIFT

BOTTOM Side P.T.O. Model	Inter. Torq.	Dir. Rot.	Engine % Hi	Engine % Rev	Filler Block	Adapter Assy.	Stud Kit	RIGHT Side P.T.O. Model	Inter. Torq.	Dir. Rot.	Engine % Hi	Engine % Rev	Filler Block	Adapter Assy.	Stud Kit
221ZCAHX-*3 (1)	250	Opp	68		8-A-032	310778X	Furnished	221ZCAHX-*4 (1)	250	Opp	68		7-A-093(T)		328170-96X
221ZEAHX-*3 (2)	250	Opp	75			310778X	Furnished	221ZEAHX-*4 (2)	250	Opp	75		7-A-062(T)		328170-96X
221ZLAHX-*3 (2)	200	Opp	101			310778X	Furnished	221ZLAHX-*4 (2)	200	Opp	101		7-A-062(T)		328170-96X
221ZPAHX-*3 (2)	200	Opp	122			310778X	Furnished	221ZPAHX-*4 (2)	200	Opp	122		7-A-062(T)		328170-96X
489ZAAHX-*3 (3)	250	Opp	59		8-A-032(P)		Furnished	442LAAHX-*4 (3)	250	Opp	59		7-A-062(P)		328170-94X
489ZCAHX-*3 (4)	250	Opp	76		8-A-032(P)		Furnished	442LCAHX-*4 (4)	250	Opp	76		7-A-062(P)		328170-94X
489ZFAHX-*3 (5)	250	Opp	94		8-A-032(P)		Furnished	442LFAHX-*4 (5)	250	Opp	94		7-A-062(P)		328170-94X
489ZHAHX-*3 (6)	250	Opp	108		8-A-032(P)		Furnished	442LHAHX-*4 (6)	250	Opp	108		7-A-062(P)		328170-94X
489ZLAHX-*3 (7)	250	Opp	122		8-A-032(P)		Furnished	442LLAHX-*4 (7)	250	Opp	121		7-A-062(P)		328170-94X
489ZQAHX-*3 (7)	225	Opp	131		8-A-032(P)		Furnished	442LQAHX-*4 (7)	225	Opp	131		7-A-062(P)		328170-94X
489ZRAHX-*3 (7)	225	Opp	152		8-A-032(P)		Furnished	442LRAHX-*4 (7)	225	Opp	152		7-A-062(P)		328170-94X
489ZSAHX-*3 (7)	200	Opp	181		8-A-032(P)		Furnished	442LSAHX-*4 (7)	200	Opp	181		7-A-062(P)		328170-94X
489ZUAHX-*3 (7)	195	Opp	215		8-A-032(P)		Furnished	442LUAHX-*4 (7)	195	Opp	216		7-A-062(P)		328170-94X
489ZWAHX-*3 (7)	175	Opp	254		8-A-032(P)		Furnished	442LWAHX-*4 (7)	175	Opp	254		7-A-062(P)		328170-94X
489ZXAHX-*3 (7)	140	Opp	300		8-A-032(P)		Furnished	442LXAHX-*4 (7)	140	Opp	301		7-A-062(P)		328170-94X
880ZBAHX-*3 (13)	500	Opp	64		8-A-248(P) 8-A-500		328170-179X	660LFAHX-*4 (8)	375	Opp	79		7-A-062(P)		328170-94X
880ZDAHX-*3 (14)	500	Opp	76		8-A-245(P) 8-A-500		328170-179X	660LQAHX-*4 (9)	375	Opp	111		7-A-062(P)		328170-94X
880ZGAHX-*3 (15)	500	Opp	85		8-A-248(P) 8-A-500		328170-179X	660LSAHX-*4 (10)	325	Opp	153		7-A-062(P)		328170-94X
880ZJAHX-*3 (16)	500	Opp	97		8-A-248(P) 8-A-500		328170-179X	660LUAHX-*4 (11)	195	Opp	183		7-A-062(P)		328170-94X
880ZMAHX-*3 (17)	500	Opp	113		8-A-248(P) 8-A-500		328170-179X	660LWAHX-*4 (12)	175	Opp	215		7-A-062(P)		328170-94X
880ZQAHX-*3 (18)	450	Opp	134		8-A-248(P) 8-A-500		328170-179X								
880ZRAHX-*3 (19)	400	Opp	158		8-A-248(P) 8-A-500		328170-179X								
880ZTAHX-*3 (20)	350	Opp	203		8-A-248(P) 8-A-500		328170-179X								

Continued Next Page

NOTE: The P.T.O. output speeds shown are with the transmission in High Range, for P.T.O. output speeds with the transmission in low range, multiply speeds shown by .82

(1) Input Gear Part No. 5-P-319
(2) Input Gear Part No. 5-P-202
(3) Input Gear Part No. 5-P-1280
(4) Input Gear Part No. 5-P-1287
(5) Input Gear Part No. 5-P-1077
(6) Input Gear Part No. 5-P-1364
(7) Input Gear Part No. 5-P-1004
(8) Input Gear Part No. 5-P-1242
(9) Input Gear Part No. 5-P-1246
(10) Input Gear Part No. 5-P-1322
(11) Input Gear Part No. 5-P-1323
(12) Input Gear Part No. 5-P-1324
(13) Input Gear Part No. 5-P-1100
(14) Input Gear Part No. 5-P-1101
(15) Input Gear Part No. 5-P-1135
(16) Input Gear Part No. 5-P-1102
(17) Input Gear Part No. 5-P-1103
(18) Input Gear Part No. 5-P-1385
(19) Input Gear Part No. 5-P-1104
(20) Input Gear Part No. 5-P-1105

Parker Hannifin Corporation
Chelsea Products Division
Olive Branch, MS 38654 USA

PSDO165-18A
PSDO185-18A
PSDO205-18A

BOTTOM SIDE ONLY

TRANSMISSION GEAR DATA:
BOT 8-Bolt Opening Gear FORWARD of Centerline
52 Teeth - SPUR

PITCH LINE TO APERTURE FACE:
0.9280" (23.5700MM)

RIGHT SIDE ONLY

TRANSMISSION GEAR DATA:
R.H. 6-Bolt Opening Gear REAR of Centerline
52 Teeth - SPUR

PITCH LINE TO APERTURE FACE:
1.2280" (31.1900MM)

Caution: Application Approval Required for P.T.O. Output Shaft Speeds Above 2500 R.P.M.

BOTTOM Side P.T.O. Model	Inter. Torq.	Dir. Rot.	Engine % Hi	Engine % Rev	Filler Block	Adapter Assy.	Stud Kit	RIGHT Side P.T.O. Model	Inter. Torq.	Dir. Rot.	Engine % Hi	Engine % Rev	Filler Block	Adapter Assy.	Stud Kit
ONE SPEED - TWO GEAR - POWERSHIFT (AIR)															
236ZDAHX-*3 (7)	250	Opp	98		7-A-093(P)	328481X	328170-94X	236LDAHX-*4 (7)	250	Opp	98		7-A-062(T)		328170-94X
236ZKAHX-*3 (7)	250	Opp	127		7-A-093(P)	328481X	328170-94X	236LKAHX-*4 (7)	250	Opp	127		7-A-062(T)		328170-94X
236ZQAHX-*3 (7)	250	Opp	170		7-A-093(P)	328481X	328170-94X	236LQAHX-*4 (7)	250	Opp	170		7-A-062(T)		328170-94X
236ZUAHX-*3 (7)	225	Opp	195		7-A-093(P)	328481X	328170-94X	236LUAHX-*4 (7)	225	Opp	196		7-A-062(T)		328170-94X
ONE SPEED - FORWARD & REVERSE															
340SFAHX-*5 (21)	200	Opp	82	86	7-A-032(P)	328481X	Furnished	340ZFAHX-*4 (21)	200	Opp	82	86	7-A-062(P)		Furnished
352ZSAHX-*3 (7)	140	Opp	181	237	7-A-093(P)	328481X	328170-94X	352ZSAHX-*4 (7)	140	Opp	181	237	7-A-062(P)		328170-94X
ONE SPEED - DUAL SHAFT															
452ZSAHX-*3 (7)	140	Opp	217		7-A-093(P)	328481X	328170-94X	452ZSAHX-*4 (7)	140	Opp	181		7-A-062(P)		328170-94X
GEARED ADAPTERS															
628ZAHX-3XX (7)		Eng			8-A-032(T)		Furnished	626KAHX-4XX (7)		Eng			7-A-062(T)		328170-94X
								630KAHX-4XX (7)		Eng			7-A-062(T)		328170-94X
								645KAHX-4XX (7)		Eng			7-A-062(T)		328170-94X

NOTE: The P.T.O. output speeds shown are with the transmission in High Range, for P.T.O. output speeds with the transmission in low range, multiply speeds shown by .82

(7) Input Gear Part No. 5-P-1004
(21) Input Gear Part No. 5-P-581

Parker Chelsea
Parker Hannifin Corporation
Chelsea Products Division
Olive Branch, MS 38654 USA


WARNER

⚠ WARNING

FAILURE OR IMPROPER SELECTION OR IMPROPER USE OF THE PRODUCTS AND/OR SYSTEMS DESCRIBED HEREIN OR RELATED ITEMS CAN CAUSE DEATH, PERSONAL INJURY AND PROPERTY DAMAGE.

This document and other information from Parker Hannifin Corporation, its subsidiaries and authorized distributors provide product and/or system options for further investigation by users having technical expertise. It is important that you analyze all aspects of your application and review the information concerning the product or system in the current product catalog. Due to the variety of operating conditions and applications for these products or systems, the user, through its own analysis and testing, is solely responsible for making the final selection of the products and systems and assuring that all performance, safety and warning requirements of the application are met.

The products described herein, including without limitation, product features, specifications, designs, availability and pricing, are subject to change by Parker Hannifin Corporation and its subsidiaries at any time without notice.

Offer of Sale

The items described in this document are hereby offered for sale by Parker Hannifin Corporation, its subsidiaries or its authorized distributors. This offer and its acceptance are governed by the provisions stated in the "Offer of Sale".

© Copyright 2008, Parker Hannifin Corporation, All Rights Reserved

Parker Hannifin Corporation
Chelsea Products Division
Olive Branch, MS 38654 USA

Transmission Make and Model	P.T.O. Appl. Number	Number Forward Speeds	Teeth in P.T.O. Driver
T-18	WRN-6	4	L36
T-18	WRN-5	4	L36-R36
T-19	WRN-5	4	L36-R36
T-98-1P (Right Hand Helix in P.T.O. Driver)	WRN-5	4	L36-R36
T-98-1R (Right Hand Helix in P.T.O. Driver)	WRN-5	4	L36-R36
T-98-1V (Right Hand Helix in P.T.O. Driver)	WRN-5	4	L36-R36
T-98-1Z	WRN-6	4	L36
T-98A (Right Hand Helix in P.T.O. Driver)	WRN-5	4	L36-R36
T98A-1	WRN-6	4	L36
T98A-1B	WRN-6	4	L36
T98A-1C	WRN-6	4	L36

IMPORTANT: See Safety Information in Section I of the Chelsea Applications catalog HY25-3000/US.

Transmission P.T.O. Driver & Aperatures (Viewed from Rear of Transmission)

L-Left Side R-Right Side B-Bottom Side T-Top Side

For transmission not listed, contact your authorized Chelsea Distributor.

January 2008

Parker Hannifin Corporation
Chelsea Products Division
Olive Branch, MS 38654 USA

190F	T-98-1V
T-18	T-98A
T-19	
T-98-1P	
T-98-1R	

LEFT SIDE ONLY | **RIGHT SIDE ONLY**

TRANSMISSION GEAR DATA:
L.H. 6-Bolt Opening Gear REAR of Centerline
36 Teeth - R.H. HELIX
PITCH LINE TO APERTURE FACE:
1.0850" (27.5600MM)

TRANSMISSION GEAR DATA:
R.H. 6-Bolt Opening Gear REAR of Centerline
36 Teeth - R.H. HELIX
PITCH LINE TO APERTURE FACE:
1.0850" (27.5600MM)

Caution: Application Approval Required for P.T.O. Output Shaft Speeds Above 2500 R.P.M.

LEFT Side P.T.O. Model	Inter. Torq.	Dir. Rot.	Engine % Hi	Engine % Rev	Filler Block	Adapter Assy.	Stud Kit	RIGHT Side P.T.O. Model	Inter. Torq.	Dir. Rot.	Engine % Hi	Engine % Rev	Filler Block	Adapter Assy.	Stud Kit
ONE SPEED - SINGLE GEAR - MECHANICAL SHIFT															
								100XRBZX-*4 (1)	125	Eng	51				Furnished
ONE SPEED - TWO GEAR - MECHANICAL SHIFT															
442XLBZX-*6 (2)	250	Opp	40				Furnished	442XLBZX-*4 (2)	250	Opp	40				Furnished
442XQBZX-*6 (2)	225	Opp	43				Furnished	442XQBZX-*4 (2)	225	Opp	43				Furnished
442XRBZX-*6 (2)	225	Opp	50				Furnished	442XRBZX-*4 (2)	225	Opp	50				Furnished
442XSBZX-*6 (2)	200	Opp	60				Furnished	442XSBZX-*4 (2)	200	Opp	60				Furnished
442XUBZX-*6 (2)	195	Opp	71				Furnished	442XUBZX-*4 (2)	195	Opp	71				Furnished
442XWBZX-*6 (2)	175	Opp	84				Furnished	442XWBZX-*4 (2)	175	Opp	84				Furnished
442XXBZX-*6 (2)	140	Opp	99				Furnished	442XXBZX-*4 (2)	140	Opp	99				Furnished
ONE SPEED - FORWARD & REVERSE															
352XSBZX-*6 (2)	140	Opp	60	78			Furnished	352XSBZX-*4 (2)	140	Opp	60	78			Furnished
ONE SPEED - DUAL SHAFT															
452XSBZX-*6 (2)	140	Opp	60				Furnished	452XSBZX-*6 (2)	140	Opp	60				Furnished

NOTE: T-18 available with opening on right or left side.

NOTE: Navistar Model #T-427 for T-19 has both right and left hand openings.

NOTE: No adapters available for this application.

(1) Gear and Shaft Kit No. KXA-2-P-583
(2) Input Gear Part No. 5-P-1028

Parker Hannifin Corporation
Chelsea Products Division
Olive Branch, MS 38654 USA

T-18
T-98-1Z
T98A-1
T98A-1B
T98A-1C

LEFT SIDE ONLY

TRANSMISSION GEAR DATA:
L.H. 6-Bolt Opening Gear REAR of Centerline
36 Teeth - R.H. HELIX

PITCH LINE TO APERTURE FACE:
1.0850" (27.5600MM)

Caution: Application Approval Required for P.T.O. Output Shaft Speeds Above 2500 R.P.M.

LEFT Side P.T.O. Model	Inter. Torq.	Dir. Rot.	Engine % Hi	Engine % Rev	Filler Block	Adapter Assy.	Stud Kit	P.T.O. Model	Inter. Torq.	Dir. Rot.	Engine % Hi	Engine % Rev	Filler Block	Adapter Assy.	Stud Kit
ONE SPEED - TWO GEAR - MECHANICAL SHIFT															
442XLBZX-*6 (1)	250	Opp	40				Furnished								
442XQBZX-*6 (1)	225	Opp	43				Furnished								
442XRBZX-*6 (1)	225	Opp	50				Furnished								
442XSBZX-*6 (1)	200	Opp	60				Furnished								
442XUBZX-*6 (1)	195	Opp	71				Furnished								
442XWBZX-*6 (1)	175	Opp	84				Furnished								
442XXBZX-*6 (1)	140	Opp	99				Furnished								
ONE SPEED - FORWARD & REVERSE															
352XSBZX-*6 (1)	140	Opp	60	78			Furnished								
ONE SPEED - DUAL SHAFT															
452XSBZX-*6 (1)	140	Opp	60				Furnished								

NOTE: T-18 available with opening on right or left side. See Application no. WRN-5 for R.H. Applications.

NOTE: No adapters available for this application.

(1) Input Gear Part No. 5-P-1028

Notes

Parker Hannifin Corporation
Chelsea Products Division
Olive Branch, MS 38654 USA

⚠ WARNING

FAILURE OR IMPROPER SELECTION OR IMPROPER USE OF THE PRODUCTS AND/OR SYSTEMS DESCRIBED HEREIN OR RELATED ITEMS CAN CAUSE DEATH, PERSONAL INJURY AND PROPERTY DAMAGE.

This document and other information from Parker Hannifin Corporation, its subsidiaries and authorized distributors provide product and/or system options for further investigation by users having technical expertise. It is important that you analyze all aspects of your application and review the information concerning the product or system in the current product catalog. Due to the variety of operating conditions and applications for these products or systems, the user, through its own analysis and testing, is solely responsible for making the final selection of the products and systems and assuring that all performance, safety and warning requirements of the application are met.

The products described herein, including without limitation, product features, specifications, designs, availability and pricing, are subject to change by Parker Hannifin Corporation and its subsidiaries at any time without notice.

Offer of Sale

The items described in this document are hereby offered for sale by Parker Hannifin Corporation, its subsidiaries or its authorized distributors. This offer and its acceptance are governed by the provisions stated in the "Offer of Sale".

© Copyright 2008, Parker Hannifin Corporation, All Rights Reserved

Parker Hannifin Corporation
Chelsea Products Division
Olive Branch, MS 38654 USA

Transmission Make and Model	P.T.O. Appl. Number	Number Forward Speeds	Teeth in P.T.O. Driver
M-13Z12A-A13 (Rear Mount)	ZFM-5	12	R14
MO-14Z12A-A14 (Rear Mount)	ZFM-6	12	R14
MO-15Z16A-A15 (Rear Mount)	ZFM-7	12	R14
S5-42 (4.65/0.77 Ratio) England	ZF-16	5	L43-R43
S5-42 (5.72/0.76 Ratio) North America	ZF-4	5	L45-R45
S5-42 (6.56 Ratio)	ZF-5	5	L44-R44
S5-42 (7.5 Gas Wide Ratio)	ZF-4	5	L45-R45
S5-47 (Diesel Close Ratio 5.08/0.77)	ZF-14	5	L43-R43
S5-47 (Gas Wide Ratio 5.72/0.76)	ZF-4	5	L45-R45
S6-650 (GM 3600 Cab/Chassis)	ZF-47	6	L39-R39
S6-66 (9.06/0.83 Ratio) England	ZF-17	6	L38-R38
S6-66 (9.01 Ratio)	ZF-11	6	L40-R40
16S-109 (13.20/1.00 Ratio) England	ZF-9	16	B22
16S-109 (13.42/1.00 Ratio) England	ZF-9	16	B22
6S-650 (Ford Only After January 2007)	ZF-50	6	L39
6S-650 (Ford Only Prior to January 2007)	ZF-45	6	L39
6S-750 (Ford Only Prior to January 2007)	ZF-45	6	L39
6S-750 (Ford Only After January 2007)	ZF-50	6	L39
6S-850 (ZF-ECOLITE, SYNCHROMESH, 6.72/0.78 Ratio)	ZF-46	6	R31
9S-109 (10.25/0.79 Ratio)	ZF-8	9	B22

IMPORTANT: See Safety Information in Section I of the Chelsea Applications catalog HY25-3000/US.

Transmission P.T.O. Driver & Aperatures (Viewed from Rear of Transmission)

L-Left Side R-Right Side B-Bottom Side T-Top Side

For transmission not listed, contact your authorized Chelsea Distributor.

January 2008

Parker Hannifin Corporation
Chelsea Products Division
Olive Branch, MS 38654 USA

S5-42 (5.72/0.76 Ratio)
S5-42 (7.5 Gas Wide Ratio)
S5-47 (Gas Wide Ratio 5.72/0.76)

LEFT SIDE ONLY

TRANSMISSION GEAR DATA:
L.H. 6-Bolt Opening Gear FORWARD of Centerline
45 Teeth - R.H. HELIX

PITCH LINE TO APERTURE FACE:
1.1953" (30.3606MM)

RIGHT SIDE ONLY

TRANSMISSION GEAR DATA:
R.H. 6-Bolt Opening Gear FORWARD of Centerline
45 Teeth - R.H. HELIX

PITCH LINE TO APERTURE FACE:
1.1953" (30.3606MM)

Caution: Application Approval Required for P.T.O. Output Shaft Speeds Above 2500 R.P.M.

LEFT Side P.T.O. Model	Inter. Torq.	Dir. Rot.	Engine % Hi	Engine % Rev	Filler Block	Adapter Assy.	Stud Kit	RIGHT Side P.T.O. Model	Inter. Torq.	Dir. Rot.	Engine % Hi	Engine % Rev	Filler Block	Adapter Assy.	Stud Kit
ONE SPEED - SINGLE GEAR - MECHANICAL SHIFT															
100XREDX-*3 (1)	125	Eng	79		7-A-187		7170-11X	100XREDX-*3 (1)	125	Eng	79		7-A-187		7170-11X
ONE SPEED - TWO GEAR - MECHANICAL SHIFT															
442KFEDX-*5 (2)	250	Opp	45		7-A-270(P)		7170-4X	442KFEDX-*3 (2)	250	Opp	45		7-A-270		7170-4X
442KLEDX-*5 (3)	250	Opp	58		7-A-270		7170-4X	442KLEDX-*3 (3)	250	Opp	58		7-A-270		7170-4X
442KQEDX-*5 (3)	250	Opp	63		7-A-270		7170-4X	442KQEDX-*3 (3)	250	Opp	63		7-A-270		7170-4X
442KSEDX-*5 (3)	200	Opp	87		7-A-270		7170-4X	442KSEDX-*3 (3)	200	Opp	87		7-A-270		7170-4X
442KUEDX-*5 (3)	195	Opp	103		7-A-270		7170-4X	442KUEDX-*3 (3)	195	Opp	103		7-A-270		7170-4X
442KWEDX-*5 (3)	175	Opp	121		7-A-270		7170-4X	442KWEDX-*3 (3)	175	Opp	121		7-A-270		7170-4X
442KXEDX-*5 (3)	140	Opp	144		7-A-270		7170-4X	442KXEDX-*3 (3)	140	Opp	144		7-A-270		7170-4X
442XFGSX-*5 (4)	250	Opp	53				Furnished	442XFGSX-*3 (4)	250	Opp	53				Furnished
442XLGSX-*5 (5)	250	Opp	68				Furnished	442XLGSX-*3 (5)	250	Opp	68				Furnished
442XQGSX-*5 (5)	225	Opp	74				Furnished	442XQGSX-*3 (5)	225	Opp	74				Furnished
442XRGSX-*5 (5)	225	Opp	85				Furnished	442XRGSX-*3 (5)	225	Opp	85				Furnished
442XSGSX-*5 (5)	200	Opp	102				Furnished	442XSGSX-*3 (5)	200	Opp	102				Furnished
442XUGSX-*5 (5)	195	Opp	121				Furnished	442XUGSX-*3 (5)	195	Opp	121				Furnished
442XWGSX-*5 (5)	175	Opp	142				Furnished	442XWGSX-*3 (5)	175	Opp	142				Furnished
442XXGSX-*5 (5)	140	Opp	168				Furnished	442XXGSX-*3 (5)	140	Opp	168				Furnished
ONE SPEED - FORWARD & REVERSE															
340XFEDX-*5 (6)	200	Opp	41	43	7-A-140		7170-4X	340XFEDX-*5 (6)	200	Opp	41	43	7-A-140		7170-4X
					7-A-270								7-A-270		
352XSEDX-*5 (3)	140	Opp	88	114	7-A-270		7170-4X	352XSEDX-*3 (3)	140	Opp	88	114	7-A-270		7170-4X
ONE SPEED - DUAL SHAFT															
452XSEDX-*3 (3)	140	Opp	88		7-A-270		7170-4X	452XSEDX-*3 (3)	140	Opp	88		7-A-270		7170-4X

NOTE: No adapters available for this application.

NOTE: The 100 Series will not mount on the left side due to interference with the reverse idler bulge.

NOTE: Gas tank may prohibit the remote mounting of a hydraulic pump on the Left Hand side.

NOTE: If there is interference with the exhaust system at the right hand aperture, use assembly arrangement "5".

NOTE: Chelsea pump model P16-45 thru-85 can be direct mounted to P.T.O.s. Larger pumps can not be direct mounted due to interference with the transmission.

(1) Gear and Shaft Kit No. KXA-2-P-649
(2) Input Gear Part No. 5-P-1090
(3) Input Gear Part No. 5-P-1056
(4) Input Gear Part No. 5-P-1151
(5) Input Gear Part No. 5-P-1152
(6) Input Gear Part No. 5-P-897

S5-42 (6.56 Ratio)

LEFT SIDE ONLY	RIGHT SIDE ONLY
TRANSMISSION GEAR DATA: L.H. 6-Bolt Opening Gear FORWARD of Centerline 44 Teeth - R.H. HELIX **PITCH LINE TO APERTURE FACE:** 1.0940" (27.7876MM)	**TRANSMISSION GEAR DATA:** R.H. 6-Bolt Opening Gear FORWARD of Centerline 44 Teeth - R.H. HELIX **PITCH LINE TO APERTURE FACE:** 1.0940" (27.7876MM)

Caution: Application Approval Required for P.T.O. Output Shaft Speeds Above 2500 R.P.M.

LEFT Side P.T.O. Model	Inter. Torq.	Dir. Rot.	Engine % Hi	Engine % Rev	Filler Block	Adapter Assy.	Stud Kit	RIGHT Side P.T.O. Model	Inter. Torq.	Dir. Rot.	Engine % Hi	Engine % Rev	Filler Block	Adapter Assy.	Stud Kit
ONE SPEED - TWO GEAR - MECHANICAL SHIFT															
442GLEQX-*5 (1)	250	Opp	56				Furnished	442GLEQX-*3 (1)	250	Opp	56				Furnished
442GQEQX-*5 (1)	225	Opp	61				Furnished	442GQEQX-*3 (1)	225	Opp	61				Furnished
442GREQX-*5 (1)	225	Opp	70				Furnished	442GREQX-*3 (1)	225	Opp	70				Furnished
442GSEQX-*5 (1)	200	Opp	84				Furnished	442GSEQX-*3 (1)	200	Opp	84				Furnished
447GSEQX-*5 (2)	200	Opp	84				Furnished	447GSEQX-*3 (2)	200	Opp	84				Furnished
ONE SPEED - FORWARD & REVERSE															
352GSEQX-*5 (1)	140	Opp	85	110			Furnished	352GSEQX-*3 (1)	140	Opp	85	110			Furnished
ONE SPEED - DUAL SHAFT															
452GSEQX-*3 (1)	140	Opp	85				Furnished	452GSEQX-*3 (1)	140	Opp	85				Furnished

NOTE: "G" mounting includes standard housing and metric stud kit 7170-72X.

(1) Input Gear Part No. 5-P-1058
(2) Input Gear Part No. 5-P-892

Parker Chelsea

Parker Hannifin Corporation
Chelsea Products Division
Olive Branch, MS 38654 USA

9S-109 (10.25/0.79 Ratio)

BOTTOM SIDE ONLY

TRANSMISSION GEAR DATA:

BOT 6-Bolt Opening Gear CENTER of Centerline

22 Teeth - L.H. HELIX

PITCH LINE TO APERTURE FACE:

1.1390" (28.9306MM)

Caution: Application Approval Required for P.T.O. Output Shaft Speeds Above 2500 R.P.M.

BOTTOM Side P.T.O. Model	Inter. Torq.	Dir. Rot.	Engine %		Filler Block	Adapter Assy.	Stud Kit	P.T.O. Model	Inter. Torq.	Dir. Rot.	Engine %		Filler Block	Adapter Assy.	Stud Kit
			Hi	Rev							Hi	Rev			
ONE SPEED - TWO GEAR - MECHANICAL SHIFT															
447GWFHX-*3 (1)	175	Eng					Furnished								

(1) Input Gear Part No. 5-P-900

Parker Hannifin Corporation
Chelsea Products Division
Olive Branch, MS 38654 USA

16S-109 (13.20/1.00 Ratio)

16S-109 (13.42/1.00 Ratio)

BOTTOM SIDE ONLY

TRANSMISSION GEAR DATA:

BOT 6-Bolt Opening Gear CENTER of Centerline

22 Teeth - L.H. HELIX

PITCH LINE TO APERTURE FACE:

1.0290" (26.1366MM)

Caution: Application Approval Required for P.T.O. Output Shaft Speeds Above 2500 R.P.M.

BOTTOM Side P.T.O. Model	Inter. Torq.	Dir. Rot.	Engine % Hi	Engine % Rev	Filler Block	Adapter Assy.	Stud Kit	P.T.O. Model	Inter. Torq.	Dir. Rot.	Engine % Hi	Engine % Rev	Filler Block	Adapter Assy.	Stud Kit

ONE SPEED - TWO GEAR - MECHANICAL SHIFT

447GWFGX-*3 (1)	175	Eng					Furnished								

(1) Input Gear Part No. 5-P-901

Parker Chelsea

Parker Hannifin Corporation
Chelsea Products Division
Olive Branch, MS 38654 USA

S6-66 (9.01 Ratio)

LEFT SIDE ONLY	RIGHT SIDE ONLY
TRANSMISSION GEAR DATA: L.H. 6-Bolt Opening Gear FORWARD of Centerline 40 Teeth - R.H. HELIX **PITCH LINE TO APERTURE FACE:** 1.0550" (26.7970MM)	**TRANSMISSION GEAR DATA:** R.H. 6-Bolt Opening Gear FORWARD of Centerline 40 Teeth - R.H. HELIX **PITCH LINE TO APERTURE FACE:** 1.0550" (26.7970MM)

Caution: Application Approval Required for P.T.O. Output Shaft Speeds Above 2500 R.P.M.

LEFT Side P.T.O. Model	Inter. Torq.	Dir. Rot.	Engine % Hi	Engine % Rev	Filler Block	Adapter Assy.	Stud Kit	RIGHT Side P.T.O. Model	Inter. Torq.	Dir. Rot.	Engine % Hi	Engine % Rev	Filler Block	Adapter Assy.	Stud Kit
ONE SPEED - TWO GEAR - MECHANICAL SHIFT															
442GLFKX-*5 (1)	250	Opp	59				Furnished	442GLFKX-*3 (1)	250	Opp	59				Furnished
442GQFKX-*5 (1)	225	Opp	64				Furnished	442GQFKX-*3 (1)	225	Opp	64				Furnished
442GRFKX-*5 (1)	225	Opp	74				Furnished	442GRFKX-*3 (1)	225	Opp	74				Furnished
442GSFKX-*5 (1)	200	Opp	88				Furnished	442GSFKX-*3 (1)	200	Opp	88				Furnished
442GUFKX-*5 (1)	195	Opp	105				Furnished	442GUFKX-*3 (1)	195	Opp	105				Furnished
442GWFKX-*5 (1)	175	Opp	123				Furnished	442GWFKX-*3 (1)	175	Opp	123				Furnished
442GXFKX-*5 (1)	140	Opp	146				Furnished	442GXFKX-*3 (1)	140	Opp	146				Furnished
ONE SPEED - FORWARD & REVERSE															
352GSFKX-*5 (1)	140	Opp	89	115			Furnished	352GSFKX-*3 (1)	140	Opp	89	115			Furnished
ONE SPEED - DUAL SHAFT															
452GSFKX-*3 (1)	140	Opp	89				Furnished	452GSFKX-*3 (1)	140	Opp	89				Furnished

(1) Input Gear Part No. 5-P-1067

Parker Hannifin Corporation
Chelsea Products Division
Olive Branch, MS 38654 USA

S5-47 (Diesel Close Ratio 5.08/0.77)

LEFT SIDE ONLY	RIGHT SIDE ONLY
TRANSMISSION GEAR DATA: L.H. 6-Bolt Opening Gear FORWARD of Centerline 43 Teeth - R.H. HELIX **PITCH LINE TO APERTURE FACE:** .9800" (24.8920MM)	**TRANSMISSION GEAR DATA:** R.H. 6-Bolt Opening Gear FORWARD of Centerline 43 Teeth - R.H. HELIX **PITCH LINE TO APERTURE FACE:** .9800" (24.8920MM)

Caution: Application Approval Required for P.T.O. Output Shaft Speeds Above 2500 R.P.M.

LEFT Side P.T.O. Model	Inter. Torq.	Dir. Rot.	Engine % Hi	Engine % Rev	Filler Block	Adapter Assy.	Stud Kit	RIGHT Side P.T.O. Model	Inter. Torq.	Dir. Rot.	Engine % Hi	Engine % Rev	Filler Block	Adapter Assy.	Stud Kit
ONE SPEED - SINGLE GEAR - MECHANICAL SHIFT															
								100KREDX-*3 (1)	125	Eng	85		7-A-062		8000-13X
ONE SPEED - TWO GEAR - MECHANICAL SHIFT															
442KFEDX-*5 (2)	250	Opp	48		7-A-165		7170-3X	442KFEDX-*3 (2)	250	Opp	48		7-A-165		7170-3X
442KLEDX-*5 (3)	250	Opp	63		7-A-165		7170-3X	442KLEDX-*3 (3)	250	Opp	63		7-A-165		7170-3X
442KQEDX-*5 (3)	225	Opp	67		7-A-165		7170-3X	442KQEDX-*3 (3)	225	Opp	67		7-A-165		7170-3X
442KREDX-*5 (3)	225	Opp	78		7-A-165		7170-3X	442KREDX-*3 (3)	225	Opp	78		7-A-165		7170-3X
442KSEDX-*5 (3)	200	Opp	93		7-A-165		7170-3X	442KSEDX-*3 (3)	200	Opp	93		7-A-165		7170-3X
442KUEDX-*5 (3)	195	Opp	111		7-A-165		7170-3X	442KUEDX-*3 (3)	195	Opp	111		7-A-165		7170-3X
442KWEDX-*5 (3)	175	Opp	130		7-A-165		7170-3X	442KWEDX-*3 (3)	175	Opp	130		7-A-165		7170-3X
442KXEDX-*5 (3)	140	Opp	154		7-A-165		7170-3X	442KXEDX-*3 (3)	140	Opp	154		7-A-165		7170-3X
442LFGSX-*5 (4)	250	Opp	57		7-A-093		328170-95X	442LFGSX-*3 (4)	250	Opp	57		7-A-093		328170-95X
442LLGSX-*5 (5)	250	Opp	73		7-A-093		328170-95X	442LLGSX-*3 (5)	250	Opp	73		7-A-093		328170-95X
442LQGSX-*5 (5)	225	Opp	79		7-A-093		328170-95X	442LQGSX-*3 (5)	225	Opp	79		7-A-093		328170-95X
442LRGSX-*5 (5)	225	Opp	92		7-A-093		328170-95X	442LRGSX-*3 (5)	225	Opp	92		7-A-093		328170-95X
442LSGSX-*5 (5)	200	Opp	109		7-A-093		328170-95X	442LSGSX-*3 (5)	200	Opp	109		7-A-093		328170-95X
442LUGSX-*5 (5)	195	Opp	130		7-A-093		328170-95X	442LUGSX-*3 (5)	195	Opp	130		7-A-093		328170-95X
442LWGSX-*5 (5)	175	Opp	153		7-A-093		328170-95X	442LWGSX-*3 (5)	175	Opp	153		7-A-093		328170-95X
442LXGSX-*5 (5)	140	Opp	181		7-A-093		328170-95X	442LXGSX-*3 (5)	140	Opp	181		7-A-093		328170-95X
ONE SPEED - FORWARD & REVERSE															
340KFEDX-*5 (6)	200	Opp	44	46	7-A-165 (7)		7170-3X	340KFEDX-*5 (6)	200	Opp	44	46	7-A-165		7170-3X
352KSEDX-*5 (3)	140	Opp	94	122	7-A-165		7170-3X	352KSEDX-*3 (3)	140	Opp	94	122	7-A-165		7170-3X
352LSGSX-*5 (5)	140	Opp	110	143	7-A-093		328170-95X	352LSGSX-*3 (5)	140	Opp	110	143	7-A-093		328170-95X
ONE SPEED - DUAL SHAFT															
452KSEDX-*3 (3)	140	Opp	93		7-A-165		7170-3X	452KSEDX-*3 (3)	140	Opp	94		7-A-165		7170-3X
452LSGSX-*3 (5)	140	Opp	110		7-A-093		328170-95X	452LSGSX-*3 (5)	140	Opp	110		7-A-093		328170-95X
GEARED ADAPTERS															
626KEDX-4HK					7-A-165		7170-3X	626KEDX-3HK					7-A-165		7170-3X
630KEDX-4HK					7-A-165		7170-3X	630KEDX-3HK					7-A-165		7170-3X
645KEDX-4HK					7-A-165		7170-3X	645KEDX-3HK					7-A-165		7170-3X

NOTE: Chelsea Pump Models P16-45, -65, -85, will Direct Mount to the P.T.O. and not Interfere with the Transmission.

NOTE: On Right Side, if there is Interference with the Exhaust, use 3 Assembly.

(1) Gear and Shaft Kit No. KXA-2-P-649
(2) Input Gear Part No. 5-P-1090
(3) Input Gear Part No. 5-P-1056
(4) Input Gear Part No. 5-P-1151
(5) Input Gear Part No. 5-P-1152
(6) Input Gear Part No. 5-P-897
(7) Filler block furnished with P.T.O. but not required

S5-42 (4.65/0.77 Ratio)

LEFT SIDE ONLY

TRANSMISSION GEAR DATA:
L.H. 6-Bolt Opening Gear FORWARD of Centerline
43 Teeth - R.H. HELIX

PITCH LINE TO APERTURE FACE:
1.3110" (33.2994MM)

RIGHT SIDE ONLY

TRANSMISSION GEAR DATA:
R.H. 6-Bolt Opening Gear FORWARD of Centerline
43 Teeth - R.H. HELIX

PITCH LINE TO APERTURE FACE:
1.3110" (33.2994MM)

Caution: Application Approval Required for P.T.O. Output Shaft Speeds Above 2500 R.P.M.

ONE SPEED - TWO GEAR - MECHANICAL SHIFT

LEFT Side P.T.O. Model	Inter. Torq.	Dir. Rot.	Engine % Hi	Engine % Rev	Filler Block	Adapter Assy.	Stud Kit	RIGHT Side P.T.O. Model	Inter. Torq.	Dir. Rot.	Engine % Hi	Engine % Rev	Filler Block	Adapter Assy.	Stud Kit
442LFEDX-*3 (1)	250	Opp	48		7-A-032		7170-78X	442LFEDX-*3 (1)	250	Opp	48		7-A-032		7170-78X
442LLEDX-*3 (2)	250	Opp	63		7-A-032		7170-78X	442LLEDX-*3 (2)	250	Opp	63		7-A-032		7170-78X
442LQEDX-*3 (2)	225	Opp	67		7-A-032		7170-78X	442LQEDX-*3 (2)	225	Opp	67		7-A-032		7170-78X
442LREDX-*3 (2)	225	Opp	78		7-A-032		7170-78X	442LREDX-*3 (2)	225	Opp	78		7-A-032		7170-78X
442LSEDX-*3 (2)	200	Opp	93		7-A-032		7170-78X	442LSEDX-*3 (2)	200	Opp	93		7-A-032		7170-78X
442LUEDX-*3 (2)	195	Opp	111		7-A-032		7170-78X	442LUEDX-*3 (2)	195	Opp	111		7-A-032		7170-78X
442LWEDX-*3 (2)	175	Opp	130		7-A-032		7170-78X	442LWEDX-*3 (2)	175	Opp	130		7-A-032		7170-78X
442LXEDX-*3 (2)	140	Opp	154		7-A-032		7170-78X	442LXEDX-*3 (2)	140	Opp	154		7-A-032		7170-78X

(1) Input Gear Part No. 5-P-1090
(2) Input Gear Part No. 5-P-1056

S6-66 (9.06/0.83 Ratio)

LEFT SIDE ONLY

TRANSMISSION GEAR DATA:
L.H. 6-Bolt Opening Gear FORWARD of Centerline
38 Teeth - R.H. HELIX

PITCH LINE TO APERTURE FACE:
1.0550" (26.7970MM)

RIGHT SIDE ONLY

TRANSMISSION GEAR DATA:
R.H. 6-Bolt Opening Gear FORWARD of Centerline
38 Teeth - R.H. HELIX

PITCH LINE TO APERTURE FACE:
1.0550" (26.7970MM)

Caution: Application Approval Required for P.T.O. Output Shaft Speeds Above 2500 R.P.M.

LEFT Side P.T.O. Model	Inter. Torq.	Dir. Rot.	Engine % Hi	Engine % Rev	Filler Block	Adapter Assy.	Stud Kit	RIGHT Side P.T.O. Model	Inter. Torq.	Dir. Rot.	Engine % Hi	Engine % Rev	Filler Block	Adapter Assy.	Stud Kit
ONE SPEED - TWO GEAR - MECHANICAL SHIFT															
442GLFKX-*3 (1)	250	Opp	68				Furnished	442GLFKX-*3 (1)	250	Opp	68				Furnished
442GQFKX-*3 (1)	225	Opp	73				Furnished	442GQFKX-*3 (1)	225	Opp	73				Furnished
442GRFKX-*3 (1)	225	Opp	85				Furnished	442GRFKX-*3 (1)	225	Opp	85				Furnished
442GSFKX-*3 (1)	200	Opp	101				Furnished	442GSFKX-*3 (1)	200	Opp	101				Furnished
442GUFKX-*3 (1)	195	Opp	120				Furnished	442GUFKX-*3 (1)	195	Opp	120				Furnished
442GWFKX-*3 (1)	175	Opp	141				Furnished	442GWFKX-*3 (1)	175	Opp	141				Furnished
442GXFKX-*3 (1)	140	Opp	167				Furnished	442GXFKX-*3 (1)	140	Opp	167				Furnished

(1) Input Gear Part No. 5-P-1067

S6-650 (Ford only Prior to January 2007)
6S-650 (Ford only Prior to January 2007)
6S-750 (Ford only Prior to January 2007)

LEFT SIDE ONLY

TRANSMISSION GEAR DATA:
L.H. 6-Bolt Opening Gear FORWARD of Centerline
39 Teeth - R.H. HELIX

PITCH LINE TO APERTURE FACE:
0.9330" (23.6982MM)

Caution: Application Approval Required for P.T.O. Output Shaft Speeds Above 2500 R.P.M.

LEFT Side P.T.O. Model	Inter. Torq.	Dir. Rot.	Engine % Hi	Engine % Rev	Filler Block	Adapter Assy.	Stud Kit	P.T.O. Model	Inter. Torq.	Dir. Rot.	Engine % Hi	Engine % Rev	Filler Block	Adapter Assy.	Stud Kit
ONE SPEED - TWO GEAR - MECHANICAL SHIFT															
442XLHYX-*5 (1)	250	Opp	65				Furnished								
442XQHYX-*5 (1)	225	Opp	70				Furnished								
442XRHYX-*5 (1)	225	Opp	81				Furnished								
442XSHYX-*5 (1)	200	Opp	96				Furnished								
442XUHYX-*5 (1)	195	Opp	115				Furnished								
442XWHYX-*5 (1)	175	Opp	135				Furnished								
442XXHYX-*5 (1)	140	Opp	160				Furnished								
ONE SPEED - TWO GEAR - POWERSHIFT (AIR)															
236XDHYX-*5 (1)	250	Opp	53				Furnished								
236XKHYX-*5 (1)	250	Opp	67				Furnished								
236XQHYX-*5 (1)	250	Opp	91				Furnished								
236XUHYX-*5 (1)	225	Opp	104				Furnished								
ONE SPEED - FORWARD & REVERSE															
340XFHYX-*5 (2)	200	Opp	46	48			Furnished								
352XSHYX-*5 (1)	140	Opp	98	126			Furnished								
ONE SPEED - DUAL SHAFT															
452XSHYX-*5 (1)	140	Opp	98				Furnished								
GEARED ADAPTERS															
626XHYX-*4JB							Furnished								
630XHYX-*4JB		Eng					Furnished								
645XHYX-*4JB							Furnished								

NOTE: A "5" assembly is shown here, but other assembly arrangements may work better depending on the chassis setup, whether or not a direct mount pump is to be used, and whether or not a geared adapter is to be used. Chelsea P16-45 and -65 pumps can be direct mounted rearward if the P.T.O. is a "3" assembly (bulge up), uses the XK pump flange, and is the L,R,S or U ratio. All other combinations will have interference problems. Chelsea P16-45 and -65 pumps can be direct mounted forward if a "4" assembly is used (bulge down), an XK pump flange is used, and is the L,R,S, or U ratio. All other combinations will have interference problems. Other ratios, assemblies, pump flanges and pumps may work if a geared adapter is used, but the P.T.O. may be the lowest component on the truck. It would be vulnerable to damage.

NOTE: The 236 series cannot be used on this transmission unless the truck is equipped with an auxiliary air supply.

NOTE: If a 626, 630 or 645 series geared adapter is used, the P.T.O. input gear is the 5-P-1244 JB gear, and the HY gear is used in the adapter. If a 626XHY, 630XHY or 645XHY series geared adapter is going to be used, the P.T.O. must be a deep mount (ex: 442Z*JB). Use a 7-A-125 filler block, gaskets to establish .006" -.012" backlash, and a 328170-76X stud kit to mount the P.T.O. to the adapter. Be aware that using a geared adapter will change the direction of P.T.O. rotation, but will not affect the speeds shown above.

NOTE: Ford Super Duty MY 2005 applications with the 6.8L gas engine may have P.T.O. to engine exhaust pipe interference problems. It is recommended that you use an assembly arrangement "3". This still leaves the P.T.O. close to the engine exhaust pipe. Route cable and wiring away from the exhaust pipe. Heat may be an issue for P.T.O. operation due to the proximity of the engine exhaust pipe.

NOTE: Refer to Ford Body Builders Book (Power Take-Off Applications SEIC/PTO) for information on removal of a tab on the M60D transmission case. This will help in direct mount pump installations.

(1) Input Gear Part No. 5-P-1237
(2) Input Gear Part No. 5-P-1245

6S-850 (6.72/0.78 Ratio)

REAR SIDE ONLY	RIGHT SIDE ONLY
TRANSMISSION GEAR DATA: REAR 4-Bolt Opening Gear REAR of Centerline 0 Teeth - **PITCH LINE TO APERTURE FACE:**	**TRANSMISSION GEAR DATA:** R.H. 6-Bolt Opening Gear FORWARD of Centerline 31 Teeth - HELIX **PITCH LINE TO APERTURE FACE:** 2.0290" (51.5366MM)

Caution: Application Approval Required for P.T.O. Output Shaft Speeds Above 2500 R.P.M.

REAR Side P.T.O. Model	Inter. Torq.	Dir. Rot.	Engine % Hi	Engine % Rev	Filler Block	Adapter Assy.	Stud Kit	RIGHT Side P.T.O. Model	Inter. Torq.	Dir. Rot.	Engine % Hi	Engine % Rev	Filler Block	Adapter Assy.	Stud Kit
ONE SPEED - TWO GEAR - MECHANICAL SHIFT															
								290XQJJX-*3 (1)	180	Opp	104		7-A-125		7170-79X
REAR MOUNT & THRUSHAFT															
522RTAAX-*-	258	Eng	71												
522RVAAX-*-	258	Eng	90												

(1) Input Gear Part No. 5-P-1258

S6-650 (GM 3600 Cab/Chassis)

LEFT SIDE ONLY	RIGHT SIDE ONLY
TRANSMISSION GEAR DATA: L.H. 6-Bolt Opening Gear FORWARD of Centerline 39 Teeth - R.H. HELIX **PITCH LINE TO APERTURE FACE:** 0.9330" (23.6982MM)	**TRANSMISSION GEAR DATA:** R.H. 6-Bolt Opening Gear FORWARD of Centerline 39 Teeth - R.H. HELIX **PITCH LINE TO APERTURE FACE:** 0.9330" (23.6982MM)

Caution: Application Approval Required for P.T.O. Output Shaft Speeds Above 2500 R.P.M.

LEFT Side P.T.O. Model	Inter. Torq.	Dir. Rot.	Engine % Hi	Engine % Rev	Filler Block	Adapter Assy.	Stud Kit	RIGHT Side P.T.O. Model	Inter. Torq.	Dir. Rot.	Engine % Hi	Engine % Rev	Filler Block	Adapter Assy.	Stud Kit
ONE SPEED - TWO GEAR - MECHANICAL SHIFT															
442XLHYX-*5 (1)	250	Opp	65				Furnished	442XLHYX-*5 (1)	250	Opp	65				Furnished
442XQHYX-*5 (1)	225	Opp	70				Furnished	442XQHYX-*5 (1)	225	Opp	70				Furnished
442XRHYX-*5 (1)	225	Opp	81				Furnished	442XRHYX-*5 (1)	225	Opp	81				Furnished
442XSHYX-*5 (1)	200	Opp	96				Furnished	442XSHYX-*5 (1)	200	Opp	96				Furnished
442XUHYX-*5 (1)	195	Opp	115				Furnished	442XUHYX-*5 (1)	195	Opp	115				Furnished
442XWHYX-*5 (1)	175	Opp	135				Furnished	442XWHYX-*5 (1)	175	Opp	135				Furnished
442XXHYX-*5 (1)	140	Opp	160				Furnished	442XXHYX-*5 (1)	140	Opp	160				Furnished
ONE SPEED - FORWARD & REVERSE															
340XFHYX-*5 (2)	200	Opp	46	48			Furnished								
352XSHYX-*5 (1)	140	Opp	98	126			Furnished								
ONE SPEED - DUAL SHAFT															
452XSHYX-*5 (1)	140	Opp	98				Furnished								
GEARED ADAPTERS															
626XHYX-*4JB (1)		Eng					Furnished								
630XHYX-*4J (1)		Eng					Furnished								
645XHYX-*4JB (1)		Eng					Furnished								

CAUTION: It is required by GM Truck that the 442 Series when mounted on the right side of the transmission must have the direct mount pump, with hard tubing coming out of the rear of the pump, up and over the transmission output shaft, and a heat shield must be installed to cover the P.T.O. and the pump. Order Kit number 329333X for complete pump and heat shield installation parts.

NOTE: Only 442 Series with the CABLE SHIFT option " W " and a SAE "A" 2 bolt output flange "RC" must be used on right side applications. The 442 Series must be "Shaft High" #5 assembly arrangement due to exhaust pipe interference. "RC" field conversion kit number 328591-112X ("XD" to "RC")

NOTE: There is a left and right PTO opening for GM/ ZF S6-650, the LEFT side aperture can be used in 4 x 2 vehicles. There is a interference on the 4 x 4 vehicles due to the front wheel driveshaft on the LEFT side.

NOTE: The 626 and 645 Series adapters will mount to this transmission (LEFT Side Only) with the 5-P-1237 gear in the adapter and the 5-P-1244 gear in the 442 Series. The 442 Series must use a deep mount housing, stud kit 328170-76X and 7-A-125 spacer to mount to the adapter.

NOTE: Parker P16-45/65 pumps can be mounted rearward and direct to the 442 series on the LEFT side if the P.T.O. is a 3 assembly, (bulge up), has the XK or RC flange, and is the F, L, R, S, or U ratio.

NOTE: Wiring harness assembly number 329333-4X can be used on all applications to control engine speed. See owner's manual HY25-1135-M1/US for complete instructions.

(1) Input Gear Part No. 5-P-1237
(2) Input Gear Part No. 5-P-1245

Parker Hannifin Corporation
Chelsea Products Division
Olive Branch, MS 38654 USA

6S-650 (Ford only After January 2007)

6S-750 (Ford only After January 2007)

LEFT SIDE ONLY

TRANSMISSION GEAR DATA:

L.H. 6-Bolt Opening Gear FORWARD of Centerline

39 Teeth - R.H. HELIX

PITCH LINE TO APERTURE FACE:

0.9330" (23.6982MM)

Caution: Application Approval Required for P.T.O. Output Shaft Speeds Above 2500 R.P.M.

LEFT Side P.T.O. Model	Inter. Torq.	Dir. Rot.	Engine % Hi	Engine % Rev	Filler Block	Adapter Assy.	Stud Kit	P.T.O. Model	Inter. Torq.	Dir. Rot.	Engine % Hi	Engine % Rev	Filler Block	Adapter Assy.	Stud Kit
ONE SPEED - TWO GEAR - MECHANICAL SHIFT															
442XLKXX-*5 (1)	250	Opp	65				Furnished								
442XQKXX-*5 (1)	225	Opp	70				Furnished								
442XRKXX-*5 (1)	225	Opp	81				Furnished								
442XSKXX-*5 (1)	200	Opp	96				Furnished								
442XUKXX-*5 (1)	195	Opp	115				Furnished								
442XWKXX-*5 (1)	175	Opp	135				Furnished								
442XXKXX-*5 (1)	140	Opp	160				Furnished								
ONE SPEED - TWO GEAR - POWERSHIFT (AIR)															
236XDKXX-*5 (1)	250	Opp	53				Furnished								
236XKKXX-*5 (1)	250	Opp	67				Furnished								
236XQKXX-*5 (1)	250	Opp	91				Furnished								
236XUKXX-*5 (1)	225	Opp	104				Furnished								
ONE SPEED - FORWARD & REVERSE															
352XSKXX-*5 (1)	140	Opp	98	126			Furnished								
ONE SPEED - DUAL SHAFT															
452XSKXX-*5 (1)	140	Opp	98				Furnished								
GEARED ADAPTERS															
626XKXX-*4KY (1)		Eng					Furnished								
630XKXX-*4KY (1)		Eng					Furnished								
645XKXX-*4KY (1)		Eng					Furnished								

CAUTION: This ZF transmission model is the same as the model in Ford MY05 & MY06 trucks except for the change in the Pressure Angle (PA) of the 39 tooth P.T.O. transmission drive gear. The PA was changed from 20 degrees to 22 degrees. P.T.O. models from ZF-45 ("HY" Input Gear) application page "CAN NOT' be used on this transmission.

NOTE: Refer to Ford Body Builders Book (Power Take-Off Installations) for information on removal of a tab on the M60D transmission case. This will help in direct mount pump installations.

NOTE: A "5" assembly is shown here, but other assembly arrangements may work better depending on the chassis setup, whether or not a direct mount pump is to be used, and whether or not a geared adapter is to be used. Chelsea P16-45 and -65 pumps can be direct mounted rearward if the P.T.O. is a "3" assembly (bulge up), uses the XK pump flange, and is the L,R,S or U ratio. All other combinations will have interference problems. Chelsea P16-45 and -65 pumps can be direct mounted forward if a "4" assembly is used (bulge down), an XK pump flange is used, and is the L,R,S, or U ratio. All other combinations will have interference problems. Other ratios, assemblies, pump flanges and pumps may work if a geared adapter is used, but the P.T.O. may be the lowest component on the truck. It would be vulnerable to damage.

NOTE: The 236 Series cannot be used on this transmission unless the truck is equipped with an auxiliary air supply.

NOTE: If a 626, 630 or 645 Series geared adapter is used, the P.T.O. input gear is the 5-P-1412, KY gear, and the 5-P-1411, KX gear is used in the adapter. If a 626XKX, 630XKX or 645XKX Series geared adapter is going to be used, the P.T.O. must be a deep mount (ex: 442Z*KY). Use a 7-A-125 filler block with gaskets to establish .006" -.012" backlash, and a 328170-76X stud kit to mount the P.T.O. to the adapter. Be aware that using a geared adapter will change the direction of P.T.O. rotation, but will not affect the speeds shown above.

NOTE: Refer to Ford Body Builders Book (Power Take-Off Applications SEIC/PTO) for information on removal of a tab on the M60D transmission case. This will help in direct mount pump installations.

(1) Input Gear Part No. 5-P-1411

Notes

Parker Hannifin Corporation
Chelsea Products Division
Olive Branch, MS 38654 USA

Notes

Parker Hannifin Corporation
Chelsea Products Division
Olive Branch, MS 38654 USA

Offer of Sale

The items described in this document and other documents or descriptions provided by Parker Hannifin Corporation, its subsidiaries and its authorized distributors are hereby offered for sale at prices to be established by Parker Hannifin Corporation, its subsidiaries and its authorized distributors. This offer and its acceptance by any customer ("Buyer") shall be governed by all of the following Terms and Conditions. Buyer's order for any such items, when communicated to Parker Hannifin Corporation, its subsidiary or an authorized distributor ("Seller") verbally or in writing, shall constitute acceptance of this offer.

1. Terms and Conditions of Sale: All descriptions, quotations, proposals, offers, acknowledgments, acceptances and sales of Seller's products are subject to and shall be governed exclusively by the terms and conditions stated herein. Buyer's acceptance of any offer to sell is limited to these terms and conditions. Any terms or conditions in addition to, or inconsistent with those stated herein, proposed by Buyer in any acceptance of an offer by Seller, are hereby objected to. No such additional, different or inconsistent terms and conditions shall become part of the contract between Buyer and Seller unless expressly accepted in writing by Seller. Seller's acceptance of any offer to purchase by Buyer is expressly conditional upon Buyer's assent to all the terms and conditions stated herein, including any terms in addition to, or inconsistent with those contained in Buyer's offer, Acceptance of Seller's products shall in all events constitute such assent.

2. Payment: Payment shall be made by Buyer net 30 days from the date of delivery of the items purchased hereunder. Amounts not timely paid shall bear interest at the maximum rate permitted by law for each month or portion thereof that the Buyer is late in making payment. Any claims by Buyer for omissions or shortages in a shipment shall be waived unless Seller receives notice thereof within 30 days after Buyer's receipt of the shipment.

3. Delivery: Unless otherwise provided on the face hereof, delivery shall be made F.O.B. Seller's plant. Regardless of the method of delivery, however, risk of loss shall pass to Buyer upon Seller's delivery to a carrier. Any delivery dates shown are approximate only and Seller shall have no liability for any delays in delivery.

4. Warranty: Seller warrants that the items sold hereunder shall be free from defects in material or workmanship for a period of:
(A) All Power Take-Off units one (1) year from date of installation.
(B) Except 267, 277, 278, 242, 244, 246, 250, 251 and 859 series two (2) years from date of installation. **THIS WARRANTY COMPRISES THE SOLE AND ENTIRE WARRANTY PERTAINING TO ITEMS PROVIDED HEREUNDER. SELLER MAKES NO OTHER WARRANTY, GUARANTEE, OR REPRESENTATION OF ANY KIND WHATSOEVER. ALL OTHER WARRANTIES, INCLUDING BUT NOT LIMITED TO, MERCHANTABILITY AND FITNESS FOR PURPOSE, WHETHER EXPRESS, IMPLIED, OR ARISING BY OPERATION OF LAW, TRADE USAGE, OR COURSE OF DEALING ARE HEREBY DISCLAIMED. NOTWITHSTANDING THE FOREGOING, THERE ARE NO WARRANTIES WHATSOEVER ON ITEMS BUILT OR ACQUIRED WHOLLY OR PARTIALLY, TO BUYER'S DESIGNS OR SPECIFICATIONS.**

5. Limitation Of Remedy: SELLER'S LIABILITY ARISING FROM OR IN ANY WAY CONNECTED WITH THE ITEMS SOLD OR THIS CONTRACT SHALL BE LIMITED EXCLUSIVELY TO REPAIR OR REPLACEMENT OF THE ITEMS SOLD OR REFUND OF THE PURCHASE PRICE PAID BY BUYER, AT SELLER'S SOLE OPTION. IN NO EVENT SHALL SELLER BE LIABLE FOR ANY INCIDENTAL, CONSEQUENTIAL OR SPECIAL DAMAGES OF ANY KIND OR NATURE WHATSOEVER, INCLUDING BUT NOT LIMITED TO LOST PROFITS ARISING FROM OR IN ANY WAY CONNECTED WITH THIS AGREEMENT OR ITEMS SOLD HEREUNDER, WHETHER ALLEGED TO ARISE FROM BREACH OF CONTRACT, EXPRESS OR IMPLIED WARRANTY, OR IN TORT, INCLUDING WITHOUT LIMITATION, NEGLIGENCE, FAILURE TO WARN OR STRICT LIABILITY.

6. Changes, Reschedules and Cancellations: Buyer may request to modify the designs or specifications for the items sold hereunder as well as the quantities and delivery dates thereof, or may request to cancel all or part of this order, however, no such requested modification or cancellation shall become part of the contract between Buyer and Seller unless accepted by Seller in a written amendment to this Agreement. Acceptance of any such requested modification or cancellation shall be at Seller's discretion, and shall be upon such terms and conditions as Seller may require.

7. Special Tooling: A tooling charge may be imposed for any special tooling, including without limitation, dies, fixtures, molds and patterns, acquired to manufacture items sold pursuant to this contract. Such special tooling shall be and remain Seller's property notwithstanding payment of any charges by Buyer. In no event will Buyer acquire any interest in apparatus belonging to Seller which is utilized in the manufacture of the items sold hereunder, even if such apparatus has been specially converted or adapted for such manufacture and notwithstanding any charges paid by Buyer. Unless otherwise agreed, Seller shall have the right to alter, discard or otherwise dispose of any special tooling or other property in its sole discretion at any time.

8. Buyer's Property: Any designs, tools, patterns, materials, drawings, confidential information or equipment furnished by Buyer or any other items which become Buyer's property, may be considered obsolete and may be destroyed by Seller after two (2) consecutive years have elapsed without Buyer placing an order for the items which are manufactured using such property, Seller shall not be responsible for any loss or damage to such property while it is in Seller's possession or control.

9. Taxes: Unless otherwise indicated on the face hereof, all prices and charges are exclusive of excise, sales, use, property, occupational or like taxes which may be imposed by any taxing authority upon the manufacture, sale or delivery of the items sold hereunder. If any such taxes must be paid by Seller or if Seller is liable for the collection of such tax, the amount thereof shall be in addition to the amounts for the items sold. Buyer agrees to pay all such taxes or to reimburse Seller therefore upon receipt of its invoice. If Buyer claims exemption from any sales, use or other tax imposed by any taxing authority, Buyer shall save Seller harmless from and against any such tax, together with any interest or penalties thereon which may be assessed if the items are held to be taxable.

10. Indemnity For Infringement of Intellectual Property Rights: Seller shall have no liability for infringement of any patents, trademarks, copyrights, trade dress, trade secrets or similar rights except as provided in this Part 10. Seller will defend and indemnify Buyer against allegations of infringement of U.S. Patents, U.S. Trademarks, copyrights, trade dress and trade secrets (hereinafter 'Intellectual Property Rights'). Seller will defend at its expense and will pay the cost of any settlement or damages awarded in an action brought against Buyer based on an allegation that an item sold pursuant to this contract infringes the Intellectual Property Rights of a third party. Seller's obligation to defend and indemnify Buyer is contingent on Buyer notifying Seller within ten (10) days after Buyer becomes aware of such allegations of infringement, and Seller having sole control over the defense of any allegations or actions including all negotiations for settlement or compromise. If an item sold hereunder is subject to a claim that it infringes the Intellectual Property Rights of a third party, Seller may, at its sole expense and option, procure for Buyer the right to continue using said item, replace or modify said item so as to make it noninfringing, or offer to accept return of said item and return the purchase price less a reasonable allowance for depreciation. Notwithstanding the foregoing, Seller shall have no liability for claims of infringement based on information provided by Buyer, or directed to items delivered hereunder for which the designs are specified in whole or part by Buyer, or infringements resulting from the modification, combination or use in a system of any item sold hereunder. The foregoing provisions of this Part 10 shall constitute Seller's sole and exclusive liability and Buyer's sole and exclusive remedy for infringement of Intellectual Property Rights.
If a claim is based on information provided by Buyer or if the design for an item delivered hereunder is specified in whole or in part by Buyer, Buyer shall defend and indemnify Seller for all costs, expenses or judgments resulting from any claim that such item infringes any patent, trademark, copyright, trade dress, trade secret or any similar right.

11. Force Majeure: Seller does not assume the risk of and shall not be liable for delay or failure to perform any of Seller's obligations by reason of circumstances beyond the reasonable control of Seller (hereinafter 'Events of Force Majeure'). Events of Force Majeure shall include without limitation, accidents, acts of God, strikes or labor disputes, acts, laws, rules or regulations of any government or government agency, fires, floods, delays or failures in delivery of carriers or suppliers, shortages of materials and any other cause beyond Seller's control.

12. Entire Agreement/Governing Law: The terms and conditions set forth herein, together with any amendments, modifications and any different terms or conditions expressly accepted by Seller in writing, shall constitute the entire Agreement concerning the items sold, and there are no oral or other representations or agreements which pertain there/to. This Agreement shall be governed in all respects by the law of the State of Ohio. No actions arising out of the sale of the items sold hereunder or this Agreement may be brought by either party more than two (2) years after the cause of action accrues.

1/06-P

Extensive Hydraulic Product Offering

Accumulators



Piston, bladder and diaphragm type accumulators, gas bottles and KleenVent reservoir isolators.

www.parker.com/accumulator

Compact Hydraulics



Self-contained with a motor, gear pump, reservoir, internal valving, load hold checks and relief valves.

www.parker.com/oildyne

Cylinders



Standard and custom hydraulic cylinders for industrial and mobile applications.

www.parker.com/hydcyl

Electronics/Remote Controls



Parker's unique IQAN approach combines sturdy, well-tested hardware with intelligent, flexible computing power.

www.parker.com/iqan

Filtration



Pressure and return line filters enhances machine life, reduces maintenance and lowers costs.

www.parker.com/hydraulicfilter

Integrated Hydraulic Circuits

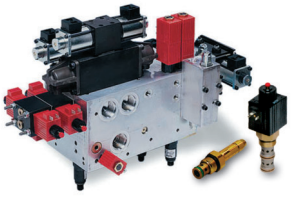

Solutions for complex circuits that include threaded cartridge valves integrated into a single manifold.

www.parker.com/ihd

Motors

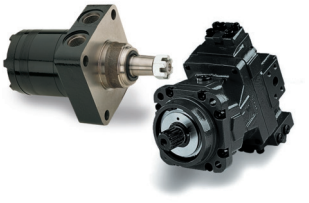

Full line of high and low speed motors provides power up to 15,000 in-lbs of torque.

www.parker.com/pumpmotor

Power Take-Off



Parker Chelsea leads the industry for engineering, innovation and performance in auxiliary power systems.

www.parker.com/chelsea

Power Units



The most complete line of standard, pre-engineered, cataloged hydraulic power units in the industry.

www.parker.com/pumpmotor

Pumps



Broad line of energy-efficient hydraulic pumps that includes piston, vane and gear pumps.

www.parker.com/mobpump

Rotary Actuator



Industry leader in the design and manufacture of hydraulic rack and pinion, and vane style rotary actuators.

www.parker.com/actuator

Valves and Controls



Hydraulic valves for virtually every hydraulic equipment application, from simple to precise control.

www.parker.com/hydraulicvalve

Parker | Chelsea

Parker Hannifin Corporation
Chelsea Products Division
Olive Branch, MS 38654 USA

Sales Offices Worldwide

North America

United States
Parker Hannifin Corporation
595 Schelter Road
Lincolnshire, IL 60069
Tel: (847) 955-5253
Fax: (847) 821-9564

Canada
Parker Hannifin Canada
160 Chisholm Drive
Milton, Ontario L9T 3G9
Tel: (905) 693-3000
Fax: (905) 867-0789

Mexico
Parker Hannifin Corporation
Via de Ferrocarril a
Matamoros 730
Apodaca, N.L Mexico
Tel: (011) 52 81 8156 6000
Fax: (011)52 80 8156 6076

Asia Pacific

Australia
305 Frankston-Dandenong Road
Dandenong South, Victoria 3175
Tel: 61 3 9768-5555
Fax: 61 3 9768-5556

Australia
Parker Hannifin (Australia)
Pty. Ltd.
9 Carrington Road
Castle Hill
New South Waltes, 2154
Tel: 61 2 9842-5812
Fax: 61 2 9842-5826

Europe

Parker Chelsea Products
Great Britain
Parker Hannifin Limited
Bldg 93, Vantage Point.,
Pensnett Estate,
Kingswinford, W Midlands, DY6 7FR
United Kingdom
Tel: (011) 44 1384 282777
Fax: (011) 44 1384 401851

Supersedes HY25-3000/US January 2006 HY25-3000/US 5M TG January 2008

Parker Hannifin Corporation
Chelsea Products Division
8225 Hacks Cross Road
Olive Branch, MS 38654, USA
Phone: (662) 895-1011
Fax: (662) 895-1050
www.parker.com/chelsea

Your Local Authorized Parker Distributor